FOR YOUR SAFETY
If you smell gas:

1. **Open windows.**
2. **DO NOT try to light any appliance.**
3. **DO NOT use electrical switches.**
4. **DO NOT use any telephone in your building.**
5. **Extinguish any open flame.**
6. **Leave the building.**
7. **Immediately call your local gas supplier after leaving the building. Follow the gas supplier's instructions.**
8. **If you cannot reach your gas supplier, call the Fire Department.**

⚠ WARNING

Fire Hazard

Keep all flammable objects, liquids and vapours the minimum required clearances to combustibles away from heater.

Some objects will catch fire or explode when placed close to heater.

Failure to follow these instructions can result in death, injury or property damage.

ROBERTS GORDON®

ROBERTS GORDON®
NRG Control

Energy Saving Control for ROBERTS GORDON® Infrared and Warm Air Heating Equipment

Installation, Operation and Service Manual

⚠ WARNING

Improper installation, adjustment, alteration, service or maintenance can result in death, injury or property damage. Read the Installation, Operation and Service Manual thoroughly before installing or servicing this equipment.

Installation must be done by an electrician qualified in the installation and service of control systems for heating equipment.

Installer

Please take the time to read and understand these instructions prior to any installation. Installer must give a copy of this manual to the owner.

Owner

Keep this manual in a safe place in order to provide your service technician with necessary information.

Roberts-Gordon Europe Limited
Unit A, Kings Hill Business Park
Darlaston Road, Wednesbury
West Midlands, WS10 7SH UK
Telephone: +44 (0)121 506 7700
Fax: +44 (0)121 506 7701
Service Telephone: +44 (0)121 506 7709
Service Fax: +44 (0)121 506 7702
E-mail: uksales@rg-inc.com
E-mail: export@rg-inc.com
www.robertsgordon.co.uk
www.blackheatheaters.co.uk

© 2014 Roberts-Gordon Europe Limited

P/N X235 Rev H 07/14

TABLE OF CONTENTS

© 2014 Roberts-Gordon Europe Limited

All rights reserved. No part of this work covered by the copyrights herein may be reproduced or copied in any form or by any means - graphic, electronic, or mechanical, including photocopying, recording, taping or information storage and retrieval systems - without the written permission of Roberts-Gordon Europe Limited.

Printed in U.K.

TABLE OF FIGURES

Product Approval

ROBERTS GORDON® appliances have been tested and CE certified as complying with the essential requirements of the Gas Appliance Directive, the Low Voltage Directive, the Electromagnetic Compatibility Directive and the Machinery Directive for use on natural gas, LPG and fuel oil when installed, commissioned and maintained in accordance with these instructions.

These instructions refer to appliances designed to operate in the European Union.

Appliances designed for other countries (non European Union) are available on request.

This appliance must be installed in accordance with the local and national codes in force and used only in a sufficiently ventilated space, as specified in these instructions.

Before installation, check that the local gas distribution systems, nature of gas and pressure, and adjustment of the appliance are compatible.

SECTION 1: INTRODUCTION

Your Safety is Important to Us! This symbol is used throughout the manual to notify you of possible fire, electrical or burn hazards. Please pay special attention when reading and following the warnings in these sections.

Installation, service and annual inspection of controller must be done by an electrician qualified in the installation and service of control systems for heating equipment.

Installation, service and annual inspection of heater must be done by a contractor qualified in the installation and service of gas or oil fired heating equipment.

Read this manual carefully before installation, operation, or service of this equipment.

The equipment must be applied and operated under the general concepts of resonable use and installed using best building practices.

This equipment is not intended for use by persons (including children) with reduced physical, sensory or mental capabilities, or lack of experience and knowledge, unless they have been given supervision or instruction concerning use of the appliance by a person responsible for their safety. Children should be supervised to ensure that they do not play with the equipment.

For optimum heater performance and safe heating conditions, inspect and maintain heater(s) before every heating season and as necessary. Also, know and maintain heater clearances to combustibles, see heater Installation, Operation and Service Manual for further details. If you require additional manuals, contact Roberts-Gordon at +44 (0)121 506 7700 or at www.robertsgordon.co.uk.

1.1 Safety Labels and Their Placement

Product safety signs or labels should be replaced by product user when they are no longer legible. Please contact Roberts-Gordon Europe Limited or your ROBERTS GORDON® independent distributor to obtain replacement signs or labels.

1.2 What is a ROBERTS GORDON® NRG Control?

The ROBERTS GORDON® NRG Control is a micro processor based controller designed for efficient control of ROBERTS GORDON® warm air and radiant products. Each control is intended for operation of a single zone of heating but is designed so that individual controls may be linked to form a network that will allow information and settings to be available at one or any of the units dependent upon site configuration. Controls will operate the following products:

- Warm air heaters On/Off operation
- Unitary BLACKHEAT® radiant systems
- BLACKHEAT® multi burner systems on a single zone*
- CORAYVAC® systems on a single zone*
- Heaters with two stage High/Low operation
- Heaters with modulating burners requiring a 0-10V DC input

**For safe use of multiburner and CORAYVAC®systems with up to four zones operating with a single shared fan, additional use of ROBERTS GORDON® System Control will be required with a ROBERTS GORDON® NRG Control installed for each zone.*

1.2.1 Features of the ROBERTS GORDON® NRG Control.

- Coded access to set up and network functions to prevent unauthorised access.
- Built in temperature sensor.
- Remote temperature sensor option.
- Self learning optimum start.
- Automatic correction for daylight saving time changes.
- Burner lockout indication and reset for suitable heater systems.
- Pre programmed holiday functions.
- May be connected on a network to give access to all controls from a single point.
- Programmed in 5 languages as standard.
- Data logging of hours run and temperatures.

1.3 General Requirements

The ROBERTS GORDON® NRG Control is only for use with ROBERTS GORDON® heating products. On site commissioning is required to ensure temperature sensor is calibrated, and that options available are selected correctly. Before proceeding with installation, it will be necessary to check that the following points have been considered.

1.4 Control Location

Each control is intended to operate a single zone of heating. The built in sensor may be used for temperature control. In this case, position control as in *Section 1.6.1 through Section 1.6.3*.

When remote temperature sensors are required, control may be fitted in any suitable location. If required, two remote sensors may be installed. The average of the two sensors will be calculated by the control.

1.5 Network Installation

The ROBERTS GORDON® NRG Control may be installed on a network so that all controls may be accessed from a single control, selected controls or all controls dependent upon how they are configured on site. To use control on a network simply requires wiring of COMS port on one control to connect to COMS port on each of the other controls in a continuous loop.

It will then be possible to set program times and temperatures for all controls from one location and copy programs from one control to another.
It will also be possible to read the current status of all controls from a single station.

1.6 Installation Requirements

1.6.1 Radiant Tube Heaters

The ROBERTS GORDON® NRG Control can operate up to ten burners providing that the electrical load on each relay does not exceed 7 A inductive.
Mount ROBERTS GORDON® NRG Control (or remote sensor if fitted) on a wall or column at a height of approximately 1.5 to 1.8 metres from the floor.
The ROBERTS GORDON® NRG Control, or sensor, should be in a position to monitor an average radiant temperature. Keep clear of cold draughts, direct sunlight, direct radiant field heaters and areas of little air movement such as corners. For larger systems, use two remote sensors to provide closer temperature control.

1.6.2 Warm Air Heaters

The ROBERTS GORDON® NRG Control can operate a single warm air heater. However up to four heaters may be controlled from each control if each heater is provided with interface relays *See Page 13, Section 4.7*.
Mount ROBERTS GORDON® NRG Control, or remote sensor, on a wall or column at a height of approximately 1.5 to 1.8 metres from floor. The ROBERTS GORDON® NRG Control, or sensor, should be positioned where it will monitor an average room temperature. Keep clear of cold draughts, direct sunlight, path of warm air from heater and areas of little air movement such as corners.

1.6.3 Multiple Unit Considerations

When using control to operate more than one radiant or warm air heater, careful consideration should be given to position of control or remote temperature sensor because single temperature monitoring point controls all heaters that are connected. The use of two remote sensors may provide closer temperature control.
For warm air heaters, the interface relay D 258 must be installed, in accordance with *Page 13, Section 4.7*, adjacent to each heater to ensure that the electrical supply at each heater is isolated for maintenance.
For larger air heaters, it may not be practical to operate more than one heater from a single control due to the larger area covered by these heaters.

Contact Roberts-Gordon Europe Limited for further advice on control location and application.

1.6.4 Installation Materials

Shielded cable Belden 8451, General Cable C 2514, or equivalent rated for up to 300 V must be used for sensors, modulating 0-10 V output, 12 V DC inputs and network bus connections. Maximum cable length for each sensor is 100 m. Maximum cable length for network is 1,000 m. **Keep control cables away from high current mains circuits to prevent signal interference.**

1.6.5 Electrical Requirements

⚠ DANGER

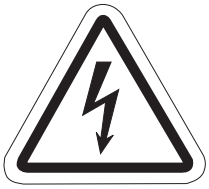

Electrical Shock Hazard

Disconnect electric before service.

Controller must be properly grounded to an electrical source.

Failure to follow these instructions can result in death or electrical shock.

The controller must have a 230 V 50 Hz power supply wired with the Ferrite EMC filter. *See Page 7, Figure 7* in accordance with relevant wiring diagram from *Page 9, Section 4*.

1.7 Programming Details

Every control is programmed with default settings and may be reconfigured to suit the needs of the installation. *See Page 33, Section 5.6.3 and Page 34, Table 1*.

When supplied, each ROBERTS GORDON® NRG Control is configured as a stand alone unit.

Each unit must be configured to operate heating equipment it is controlling. *See Page 33, Section 5.6.3 and Page 34, Table 1*.

Programming for stand alone units and network units is similar. However, for network units, they must be network configured first. *See Page 31, Section 5.6.1*.

SECTION 2: SPECIFICATIONS

Figure 1: Keypad Layout

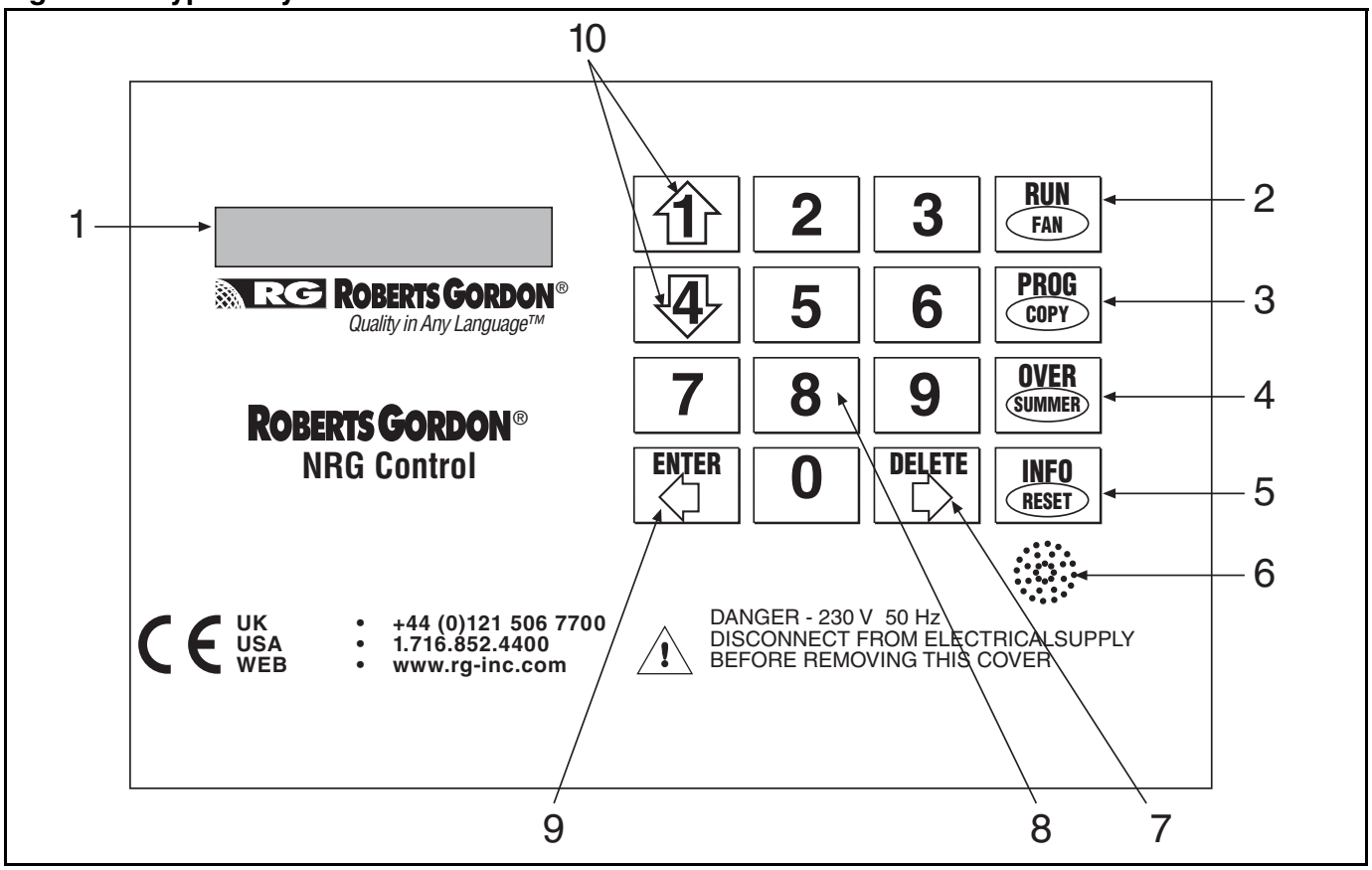

2.1 Material

2.1.1 Enclosure

Enclosure Material:	ABS fire retardant
Weight:	1.6 kg
Dimensions:	158 mm x 62 mm x 220 mm

2.1.2 Electrical

Supply:	230 V ± 10% 50 Hz 1 Ø
Outputs:	3 single pole normally open Rated at 10 A resistive or 7 A inductive.
Battery Back Up:	3 Months.
Built in Fuses	
Main Fuse:	FS1 800 mA anti-surge
PCB Protection:	FS2 315 mA quick blow
12 V Output:	FS3 315 mA quick blow

2.1.3 Sensors

Sensor:	Built in as standard Remote available as option
Remote Sensor:	
Warm Air & Radiant	80 mm x 80 mm x 22 mm
Black Bulb Radiant	68 mm diameter x 50 mm
Sports Hall Sensor	Flush Mounting

2.1.4 Program Features

Zones:	One
Programs:	3 timed periods per day, 7 days per week.
Optimum Start:	Selectable
Night Set Back:	Selectable
Burner Modulation:	Selectable (0-10 V DC output. 0 V=low fire)
Two Stage Burner	Selectable
Burner Lockout:	
Indication & Reset:	Available for use with suitable heater types
Pressure Switch:	Connections for fan proving for CORAYVAC® systems
Network:	Up to 32 units may be connected together on a network using Belden 8451 shielded cable

2.2 Keypad Layout

1. LCD Readout
2. Run button and fan button, returns to standard screen from programming options, manual operation of fan on warm air heaters.
3. Program button and copy button used to enter program options areas and copy time program.
4. Override button and summer button, used to allow operating time to be extended and set control in summer mode.
5. Information button and reset button shows current setting and status plus burner lockout reset.
6. Built in temperature sensor.
7. Delete button cancels input during programming (move forward around network).
8. Numerical key pad for inputting information.

9. Enter key to confirm inputs (move backward around network).
10. Temperature adjustment (optional, between engineer defined limits) reverts to programmed set point at next switch on.

Figure 2: Remote Sensors

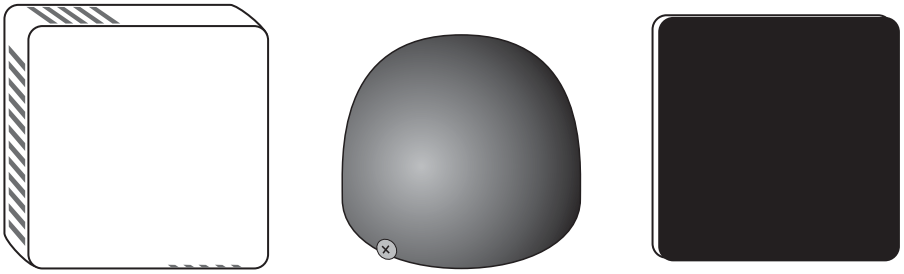

Temperature Sensor (Wire On Site) | Black Bulb Sensor | Sports Hall Sensor

Description	Part Number
Temperature Sensor (Warm Air & Radiant)	D247
Black Bulb Sensor (Radiant)	D269
Sports Hall Sensor	D270
NRG Controller (not shown)	D268
Interface Relay Assembly (not shown)	D258

SECTION 3: INSTALLATION

⚠ DANGER

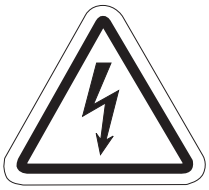

Electrical Shock Hazard

Disconnect electric before service.

Controller must be properly grounded to an electrical source.

Failure to follow these instructions can result in death or electrical shock.

Installation of ROBERTS GORDON® NRG Control must be done by an electrician qualified in the installation of control systems for heating equipment.

3.1 National Standards and Applicable Codes

All appliances must be installed in accordance with the latest revision of the applicable standards and national codes. This refers also to the electric, gas and venting installation. Note: Additional standards for installations in public garages, aircraft hangars, etc. may be applicable.

3.2 Installing the ROBERTS GORDON® NRG Control

Choose a mounting location for control. *See Page 2, Section 1.4* and *Section 1.6*.

3.2.1 Remove cover of controller by removing four clips and screws. *See Figure 3* for cover detail.

Figure 3: Cover Detail

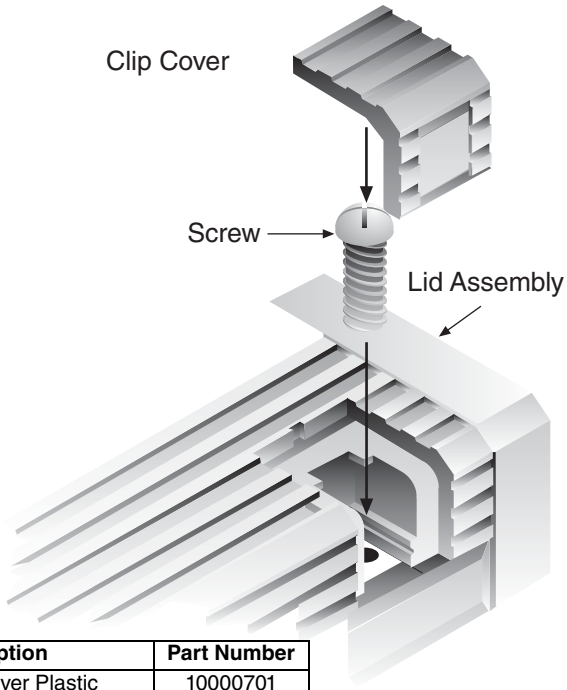

Description	Part Number
Clip Cover Plastic	10000701
Screw	10000700
Lid Assembly	10010500

3.2.2 Disconnect ribbon cable from control PCB board.

3.2.3 Position controller. *Figure 4* shows mounting hole locations.

Figure 4: Mounting Hole Layout

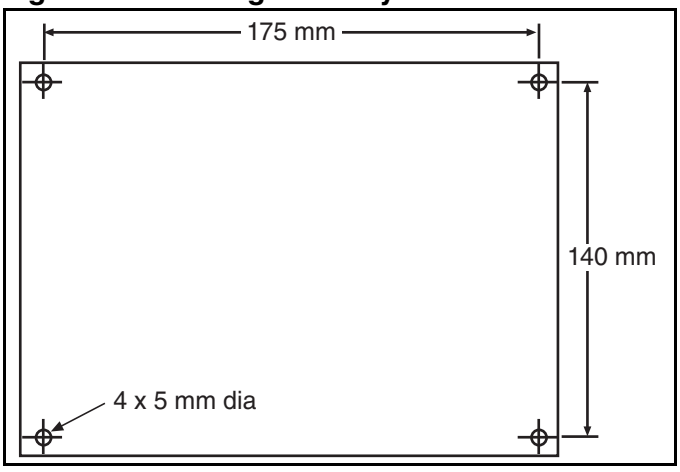

3.2.4 Remove plastic cable entry plate and carefully cut suitable holes as required for conduit entry to control. *See Figure 5*.

Do not use other entry routes or pass site wiring over circuit board.

3.2.5 Refit cable entry plate into slot at side of panel.

Figure 5: Cable Entry

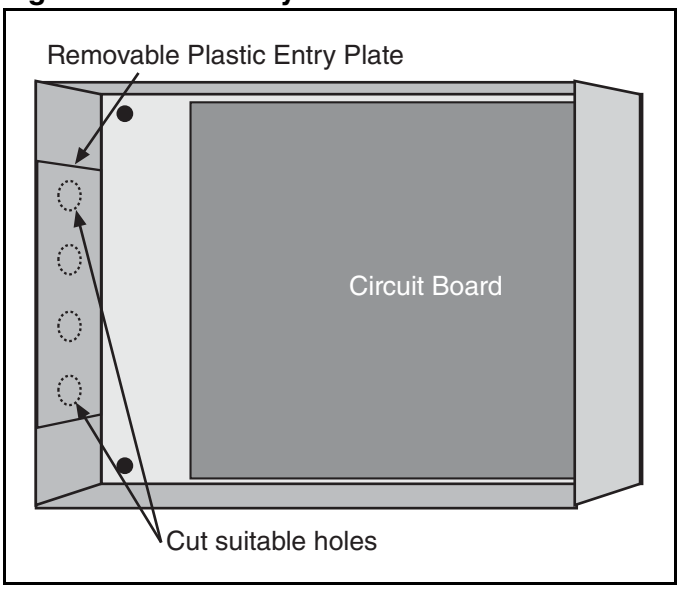

3.2.6 Install electrical wiring in accordance with the correct wiring diagram in *Section 4* to wiring terminals as shown in *Figure 6*.

Figure 6: Control Terminals and Relay Use

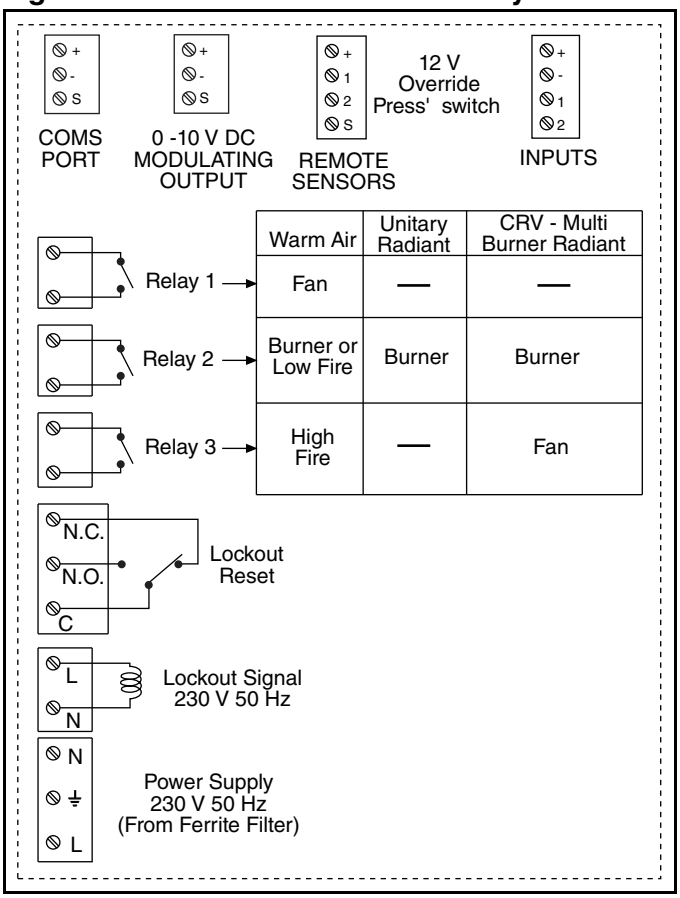

	Warm Air	Unitary Radiant	CRV - Multi Burner Radiant
Relay 1	Fan	—	—
Relay 2	Burner or Low Fire	Burner	Burner
Relay 3	High Fire	—	Fan

3.2.7 Reconnect ribbon cable to PCB board and replace cover of control by replacing four screws and covers as removed *on Page 6, Section 3.2.1*.

3.3 Electrical Installation Requirements

3.3.1 Panel must have a 230 V 50 Hz supply in accordance with the appropriate wiring diagram from *Section 4*.

3.3.2 Ensure that Live, Neutral and Earth cables are looped three times through ferrite EMC filter as shown.

Figure 7: Ferrite EMC Filter

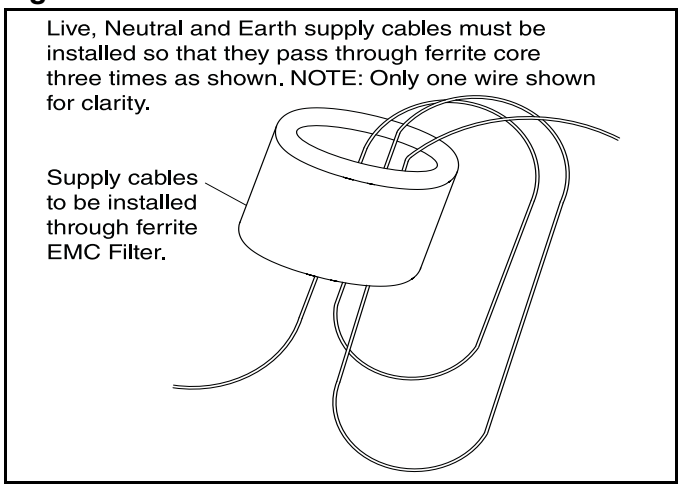

3.3.3 Ensure that cables to any low voltage equipment are Belden 8451 shielded cables with shield connected as shown in the wiring diagrams *on Page 9, Section 4.1 through Page 10, Section 4.2*.

3.3.4 Lockout Reset

Facilities are available for systems that reset to Live or reset to Neutral. Look at wiring diagram on each heater to determine correct system to use for heater concerned.
Failure to comply will cause permanent damage to burner control on heater and ROBERTS GORDON® NRG Control.

3.3.5 Network Connections

Optionally controls may linked together as described *on Page 2, Section 1.5*. Site wiring is to be connected and DIP switches set as shown *on Page 9, Section 4.1*.

3.3.6 Remote Sensors

All sensors are electrically connected in the same way. The use of remote sensors is optional.
One remote temperature sensor will operate control.
For larger heated areas, two remote temperature sensors may be installed where control will automatically calculate average of two readings.
See Page 8, Figure 8 through Page 8, Figure 10.

Position remote sensor/s in accordance with *Page 2, Section 1.4 and Page 3, Section 1.6*.
See Page 5, Figure 2 for sensor detail.

Figure 8: Sensor Mounting Plate - Warm Air

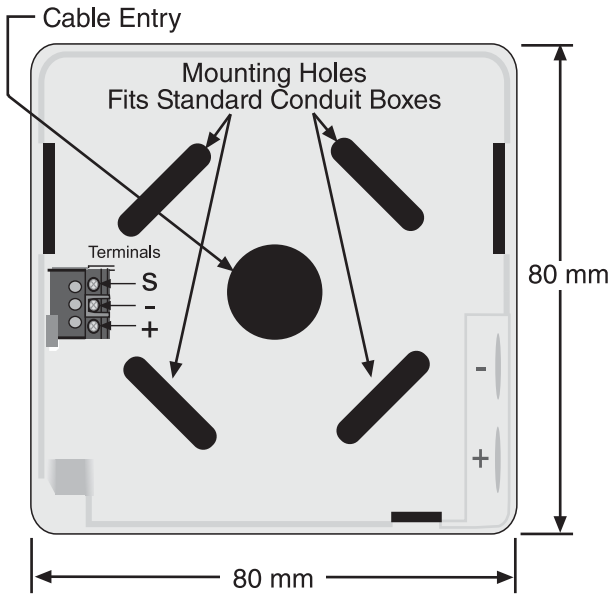

Remote sensors must be fastened using countersunk screws. Dome headed screws will short out the board and result in failure of the sensor.

Figure 9: Remote Temperature Sensor - Radiant

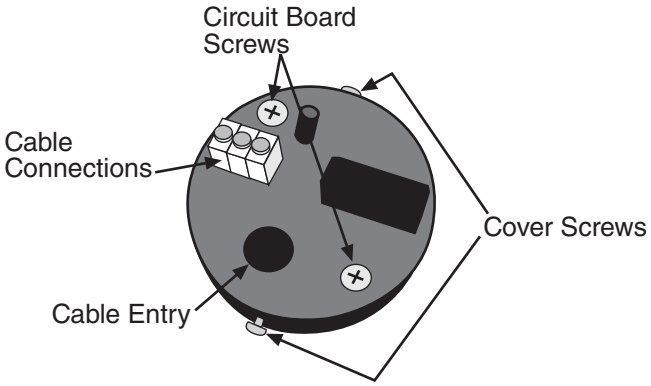

Figure 10: Sports Hall Sensor

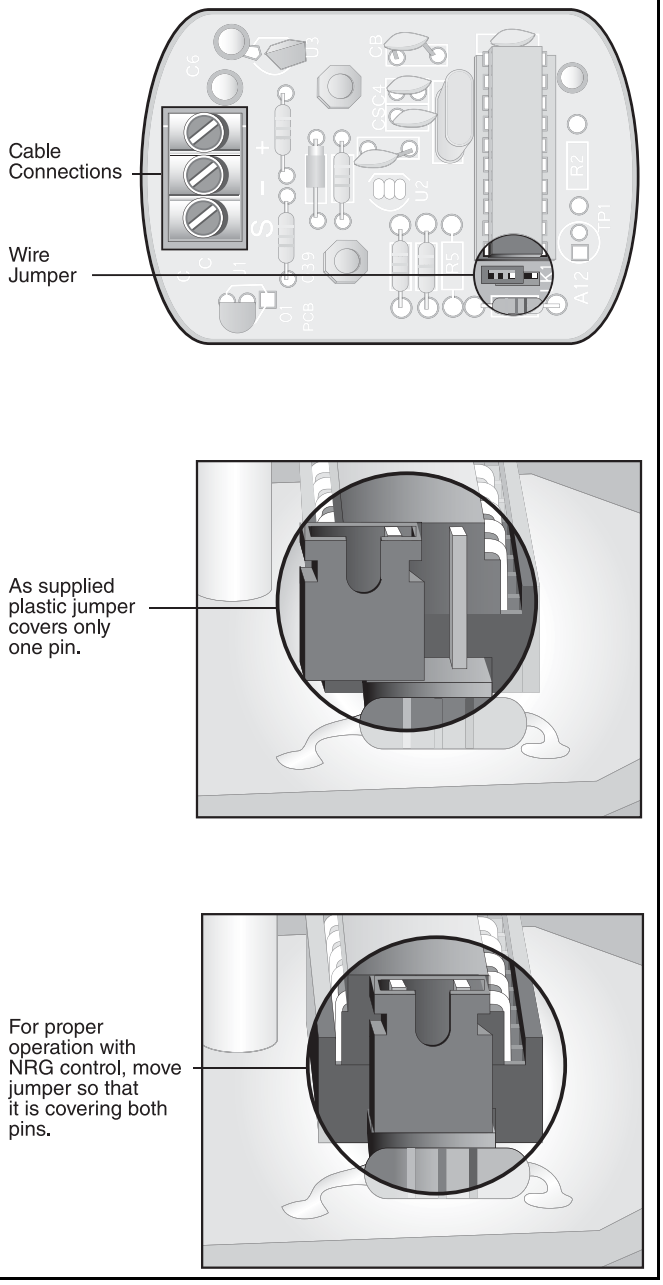

3.3.7 Pressure Switch

For CORAYVAC® systems only, a pressure switch is required to prove operation of system fan.
This must be connected to input terminals as shown *on Page 10, Section 4.2 and Page 18, Section 4.14* to allow control to monitor correct operation of fan.
Control must also be configured to monitor pressure switch. *See Page 33, Section 5.6.3 and Page 34, Table 1*.

SECTION 4: WIRING

⚠ DANGER

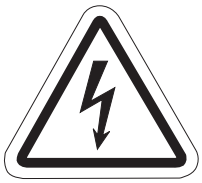

Electrical Shock Hazard

Disconnect electric before service.

More than one disconnect switch may be required to disconnect electric to the unit.

Failure to follow these instructions can result in death or electrical shock.

4.1 Network Wiring

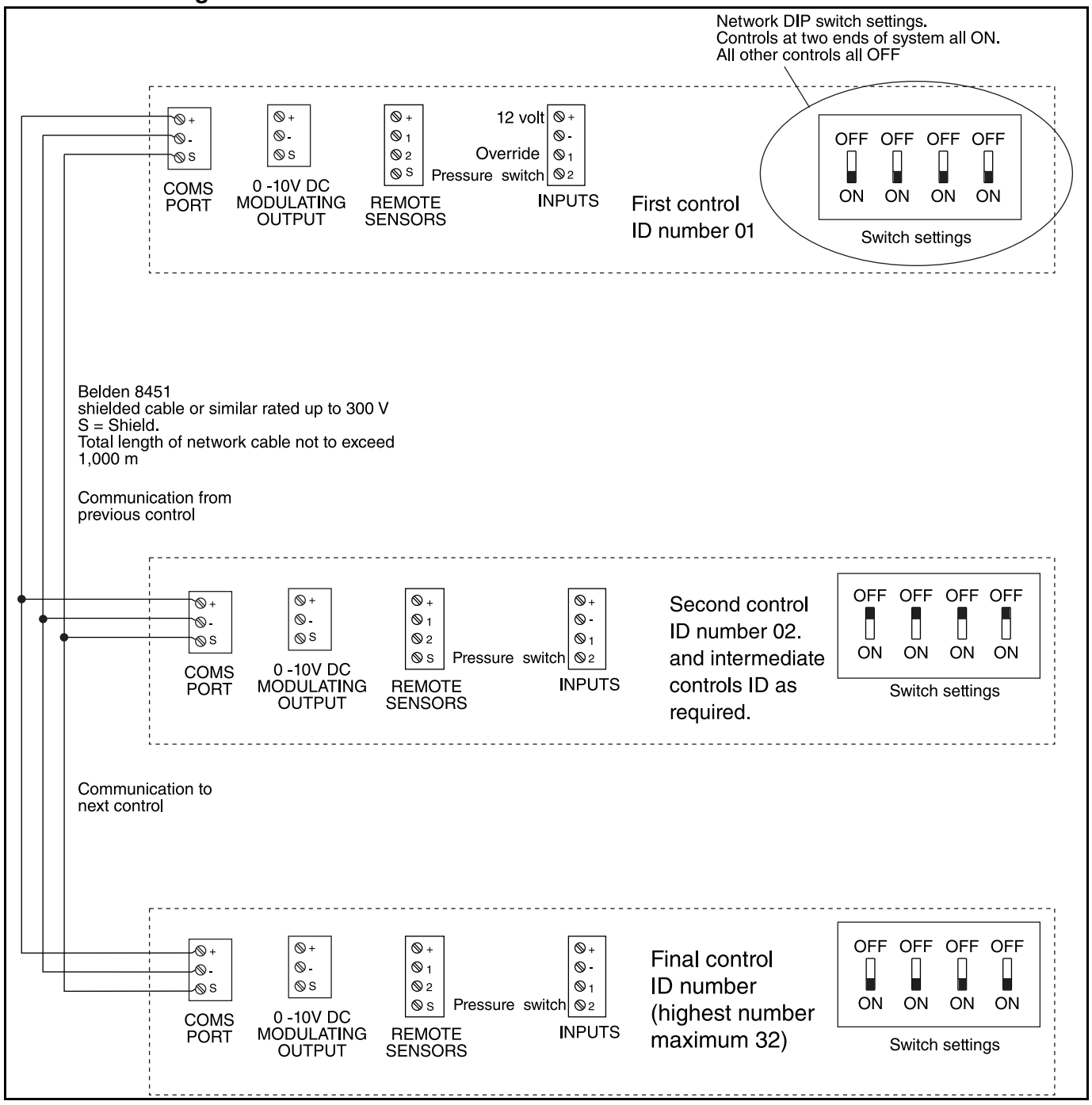

4.2 Low Voltage Wiring

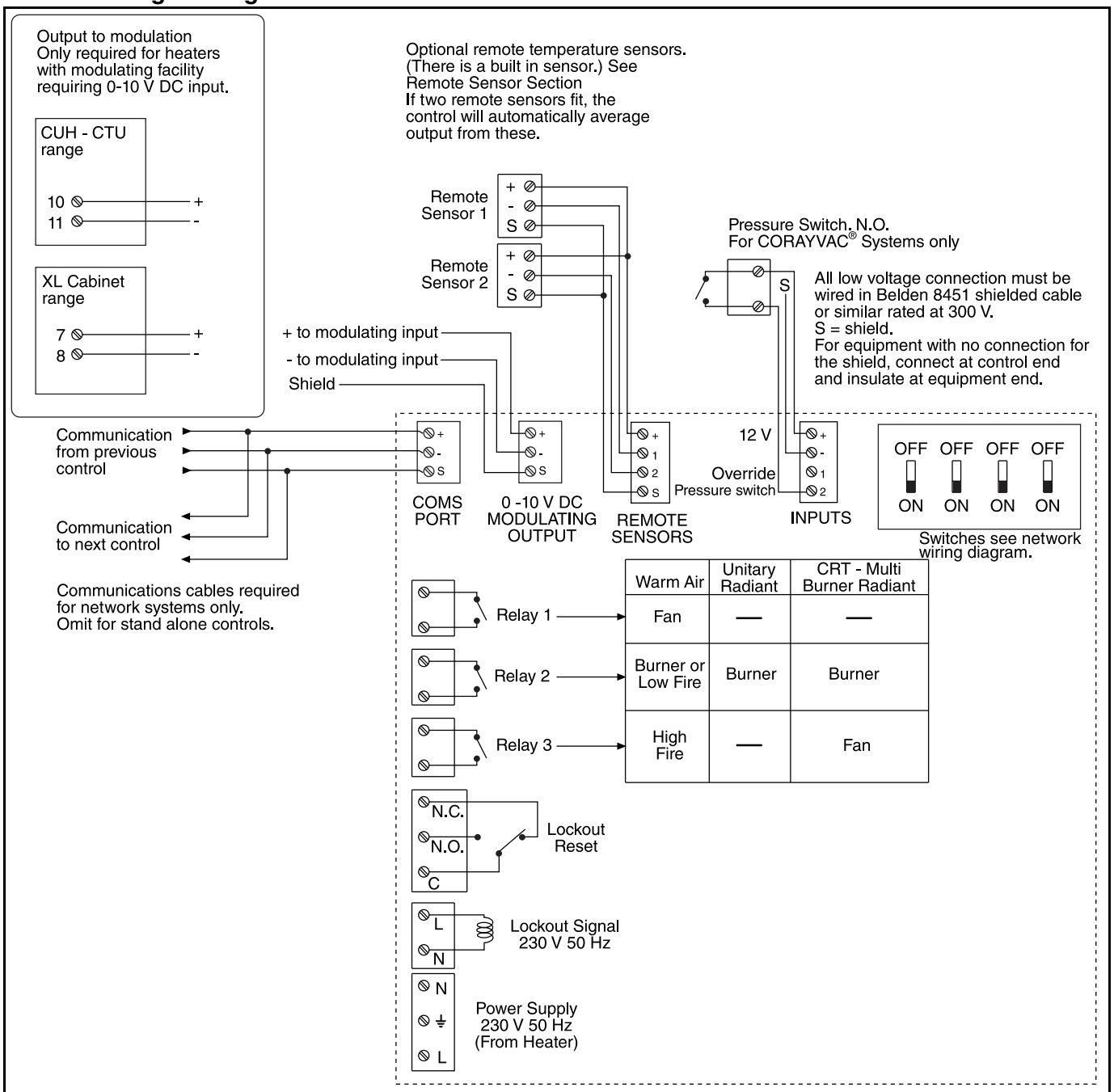

Remote Time Enabling from BMS

NOTE: This is achieved by using a volt free contact on the BMS which on heat demand bridges across + & 1 on the NRG INPUT terminals. All programme ON/OFF times on the NRG must be set to 00 00. When BMS is calling for heat, the display shows REMOTE OVERRIDE and does not indicate if Heat is ON or OFF. The Information Screen shows Time Clock DAY. When BMS is not calling for heat, the display shows HEAT OFF and the Information Screen shows Time Clock NIGHT.

Temperature control remains with the NRG.

4.3 CTU Wiring (Pektron Ignition Controller)

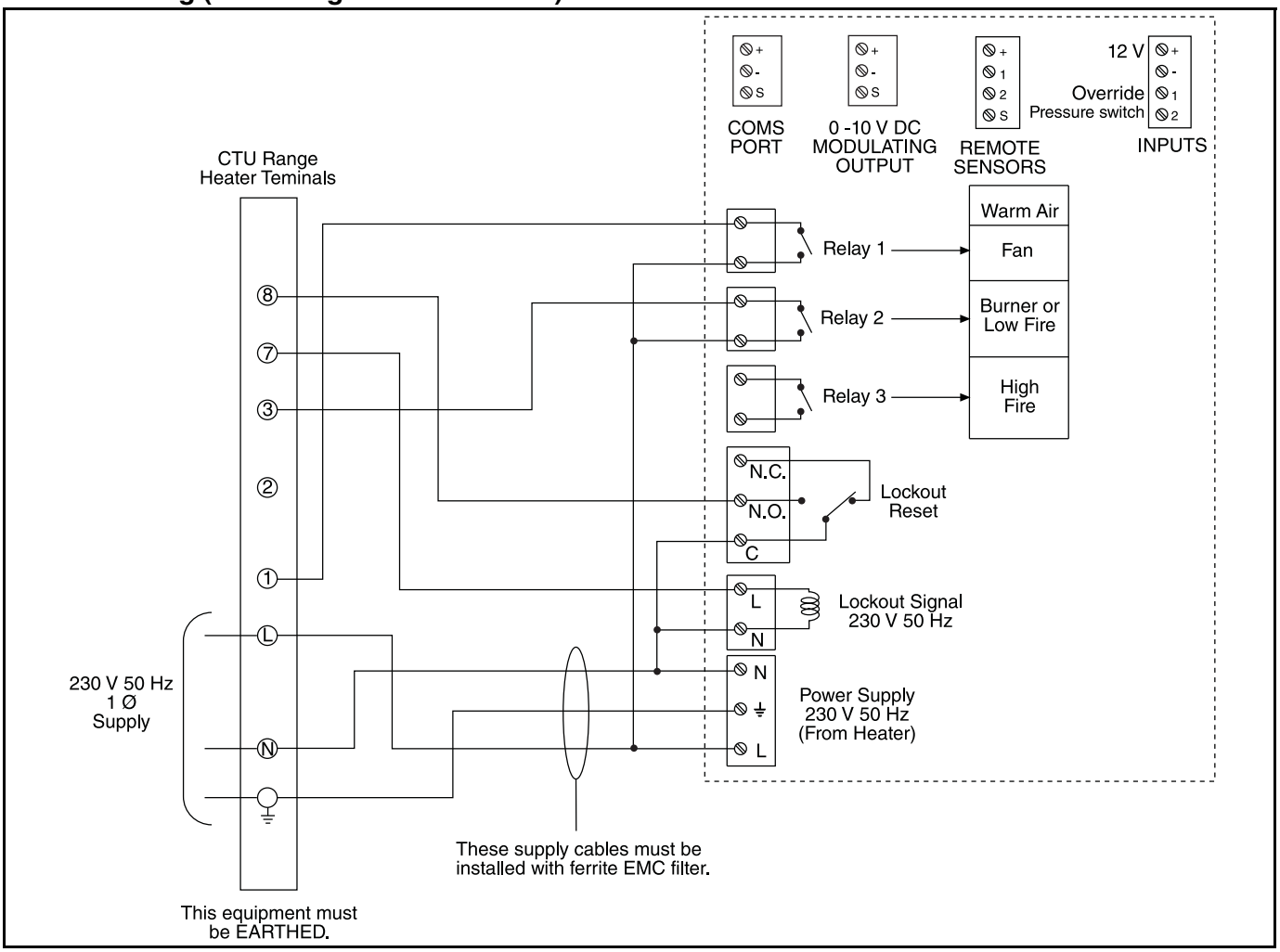

4.4 CTCU Wiring (Pektron Ignition Controller)

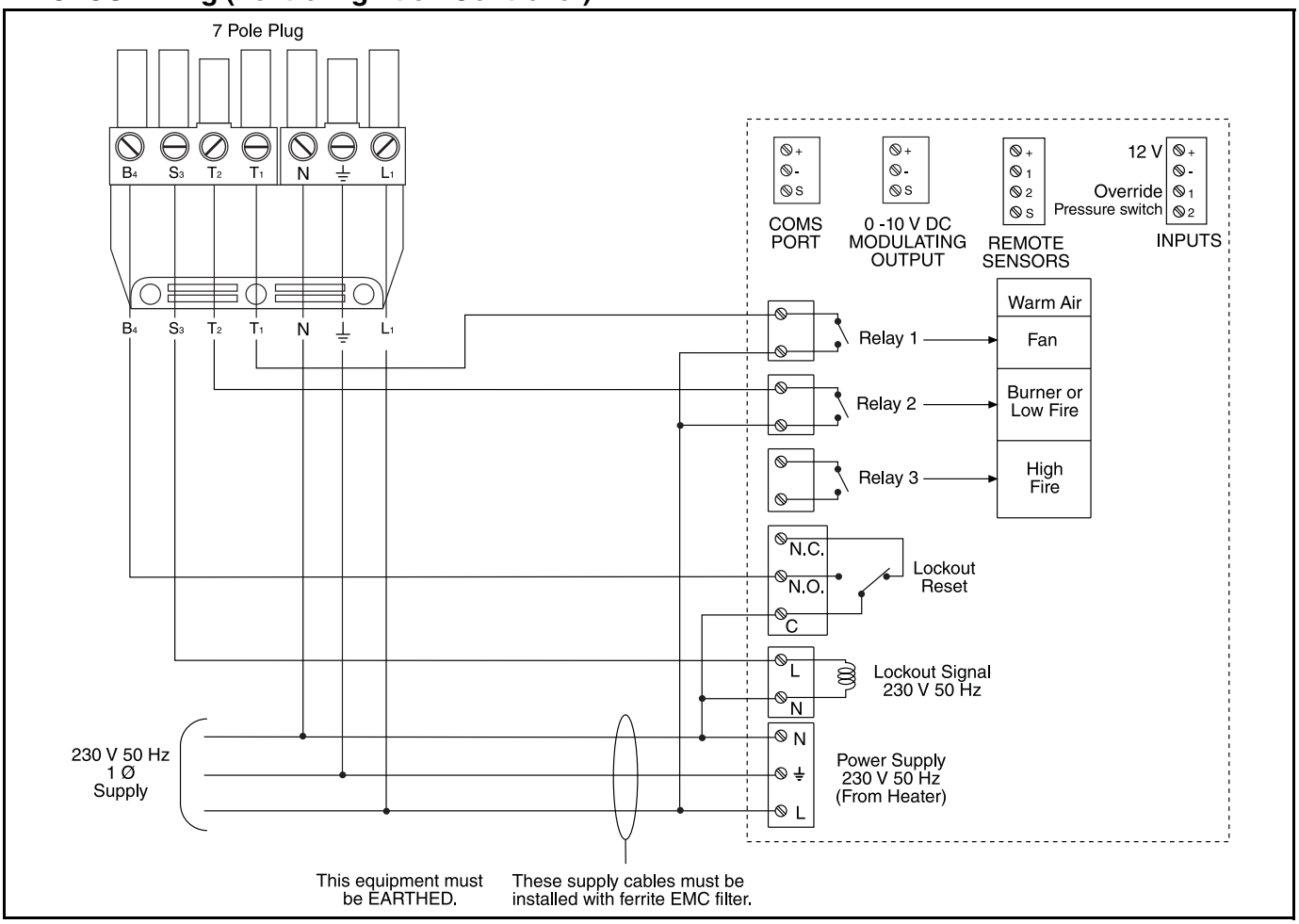

4.5 CTU Wiring (Pactrol Ignition Controller)

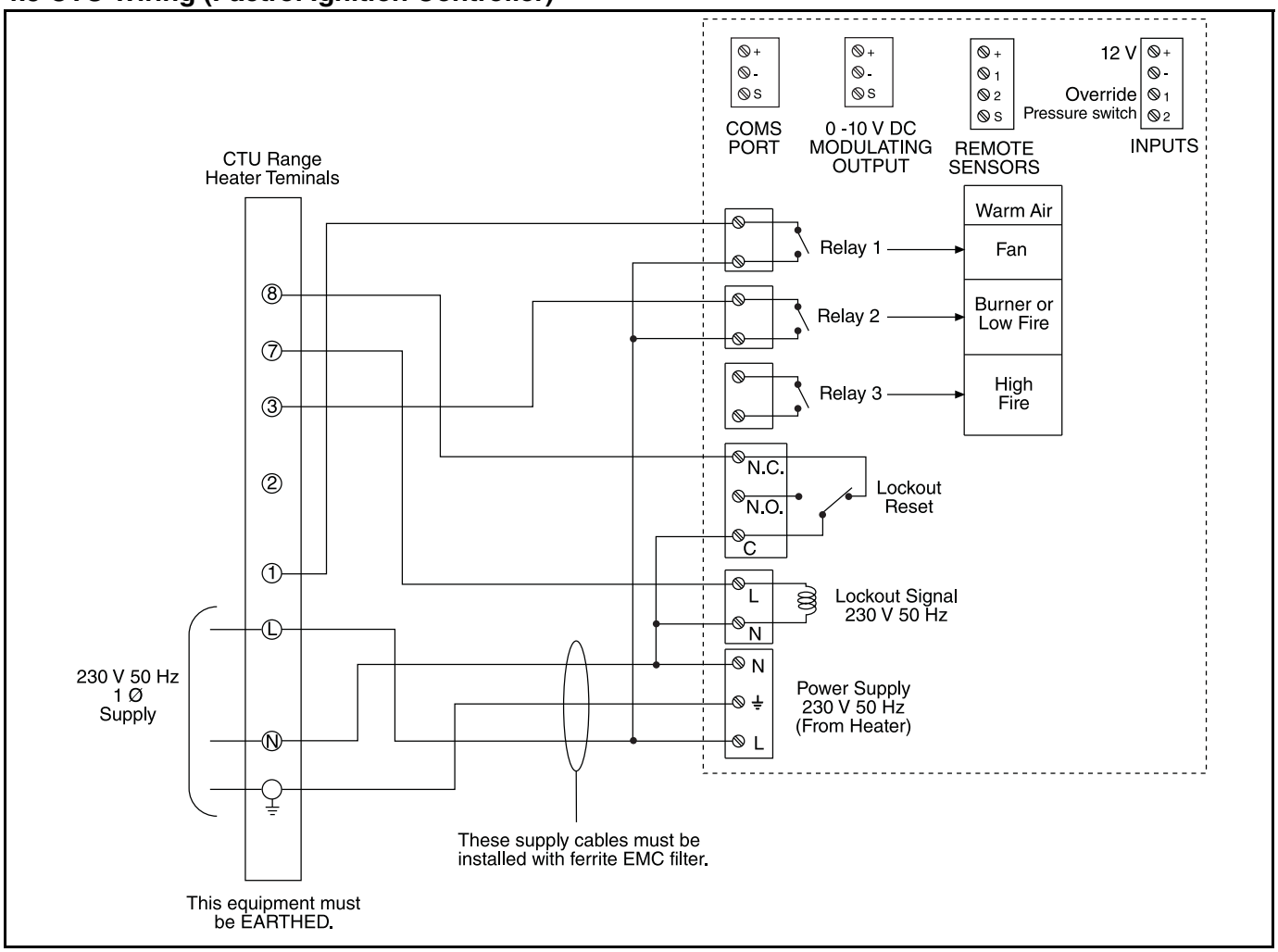

4.6 CTCU Wiring (Pactrol Ignition Controller)

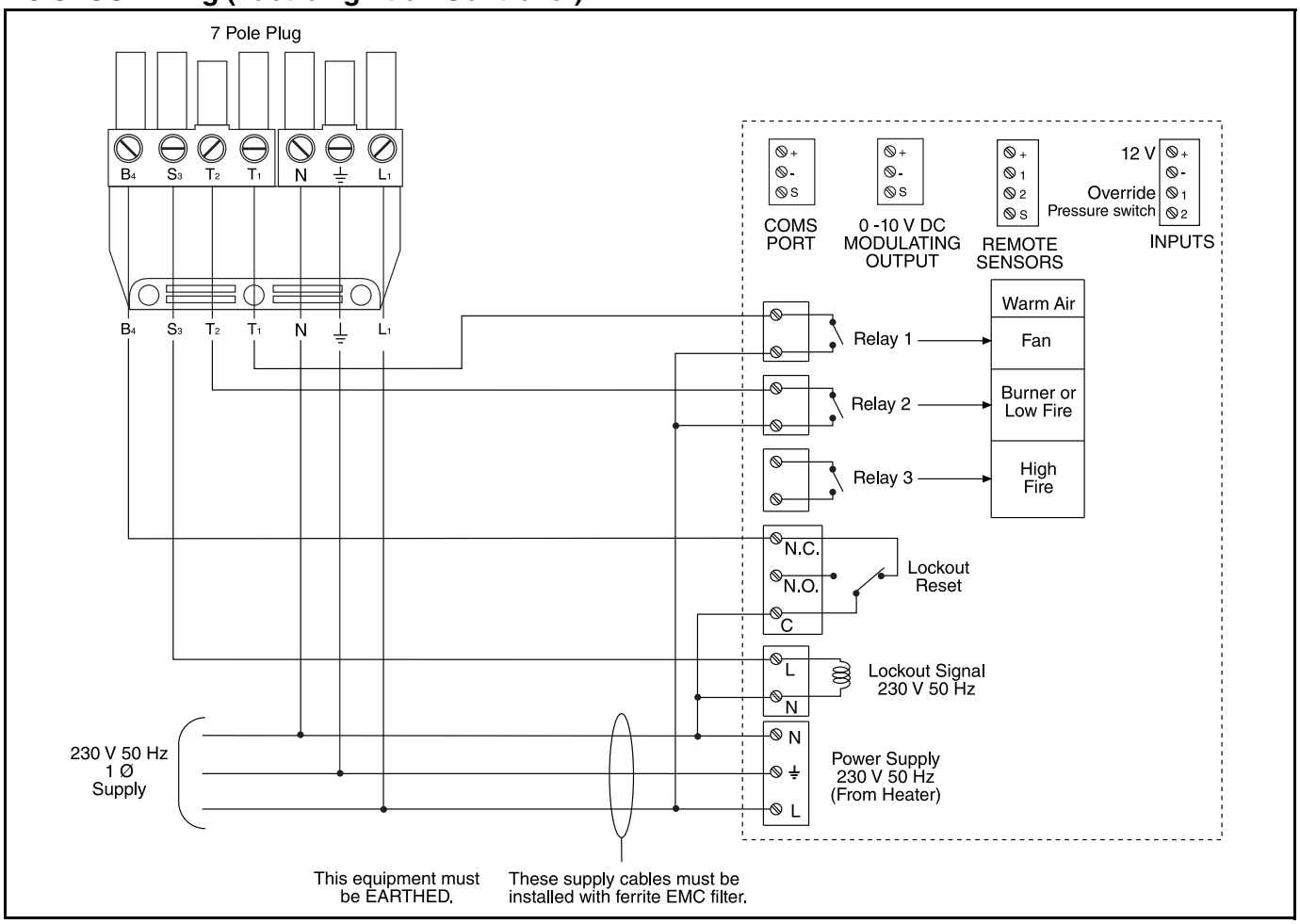

4.7 Interface Relay Wiring for Multiple Models CTU 70 - 115

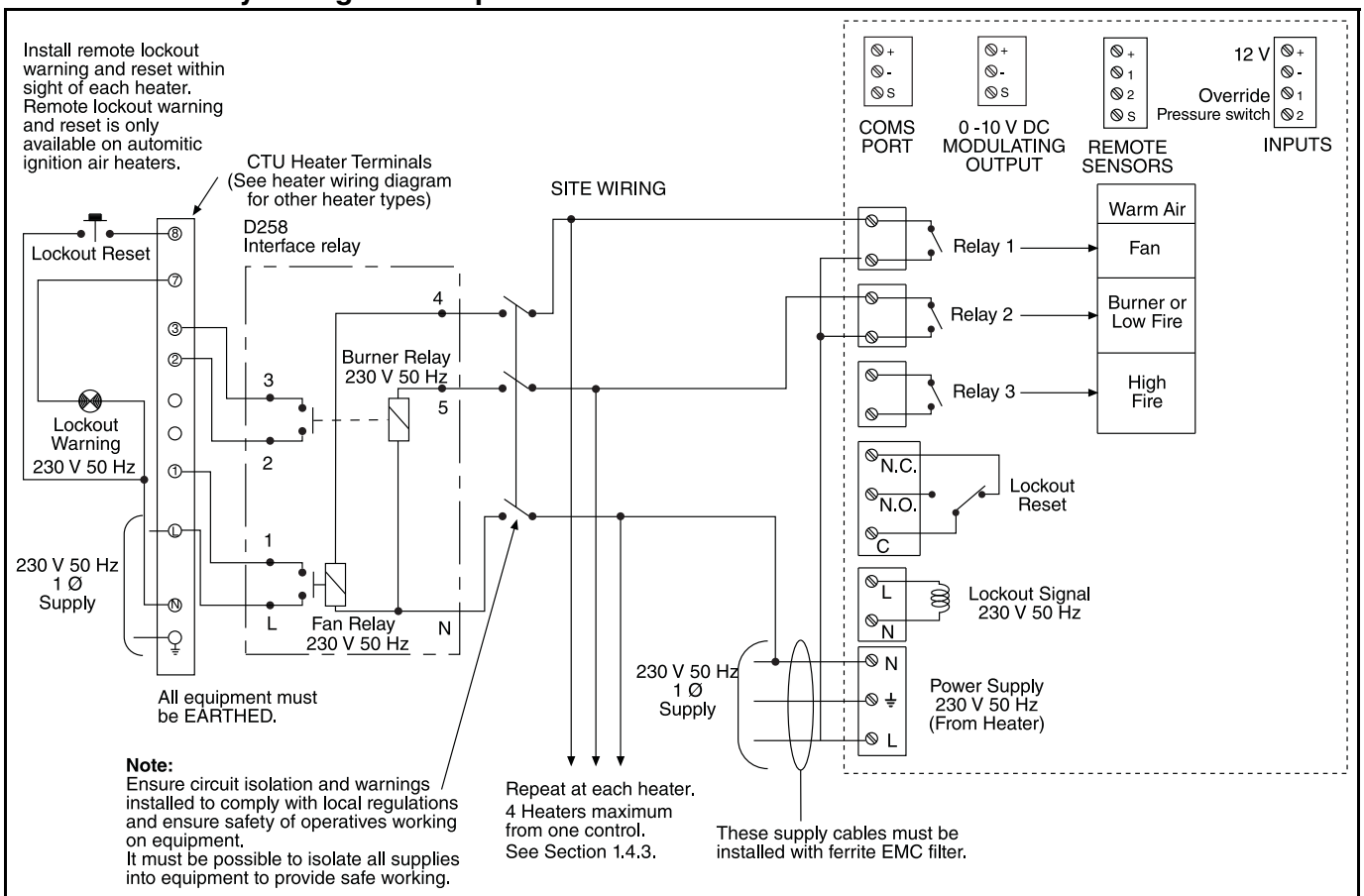

Description	Part Number
Interface Relay Assembly	D258

4.8 Interface Relay Wiring for Multiple Models CTCU 11 - 32 & CTU 40 - 60

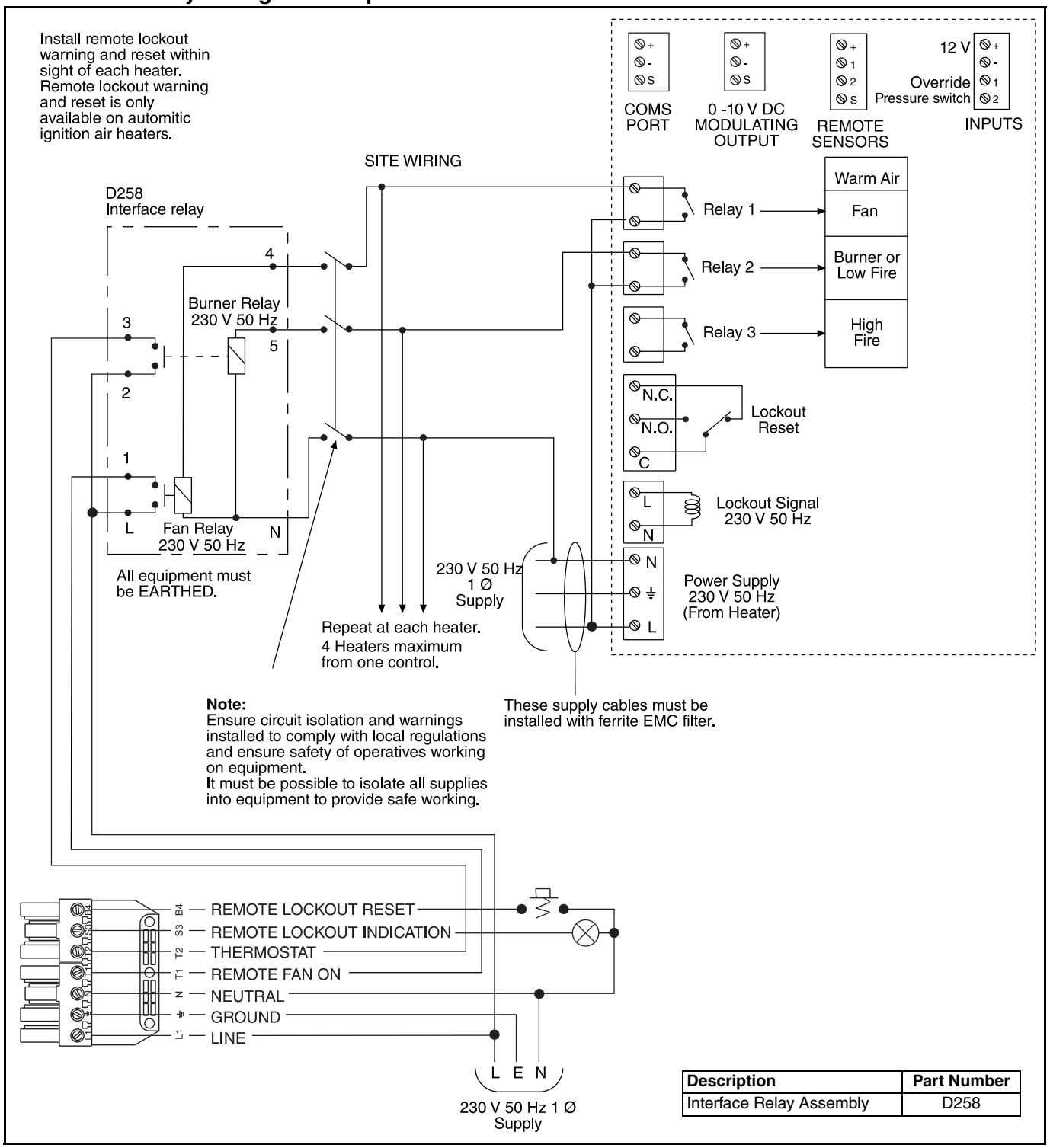

Description	Part Number
Interface Relay Assembly	D258

4.9 MGB/MOB Range Wiring - 1 Ø Cabinet Heaters

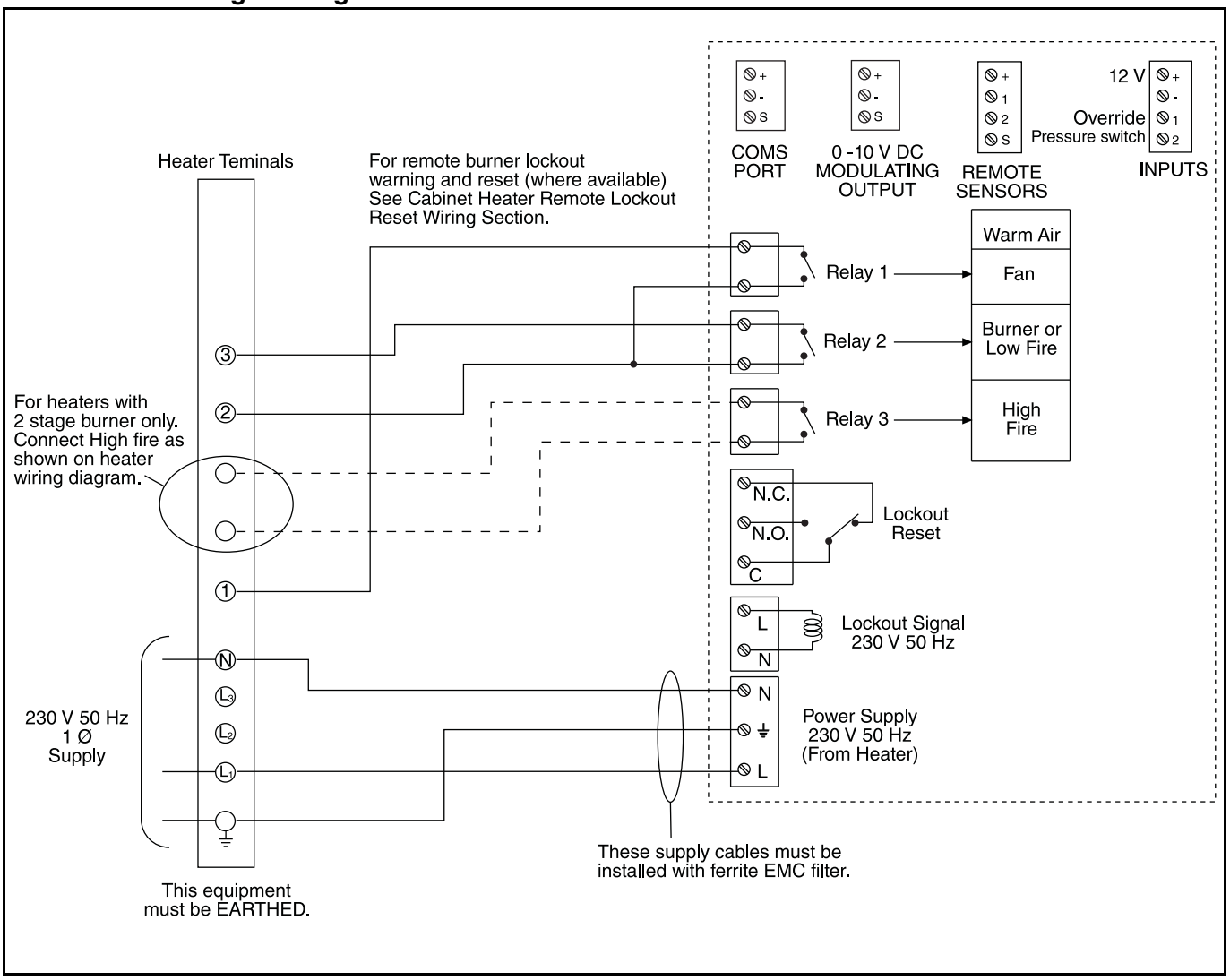

4.10 MGB/MOB Range Wiring - 3 Ø Cabinet Heaters

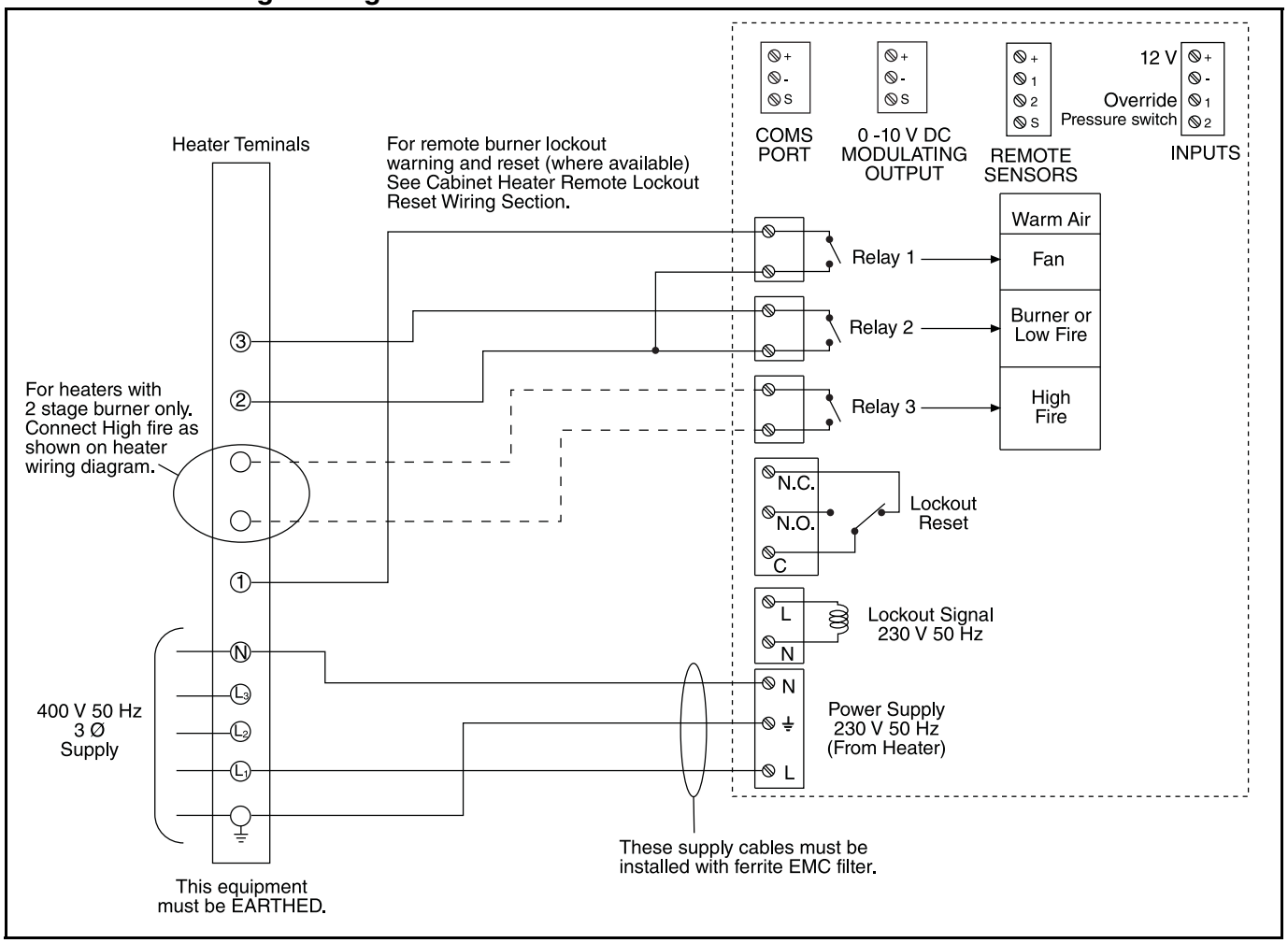

4.11 Cabinet Heater Remote Lockout Reset Wiring (With THERMOWATT Ignition Control)

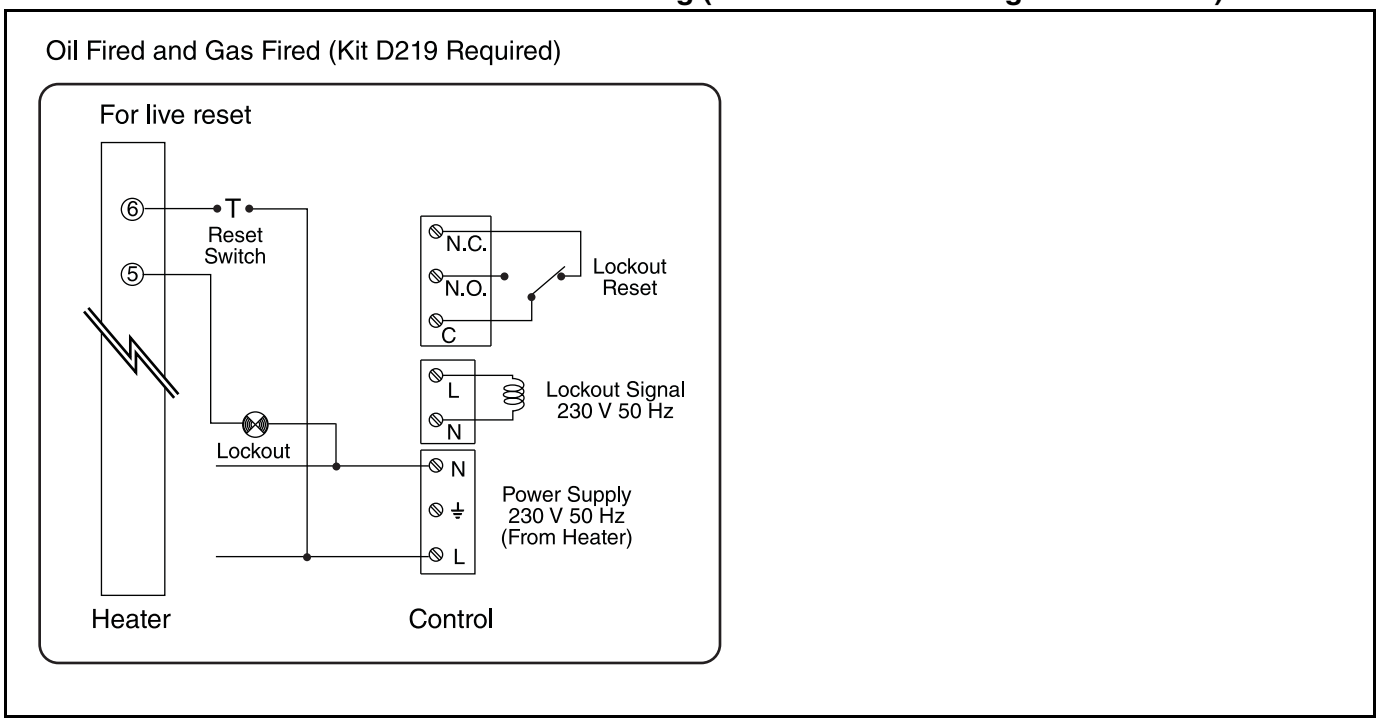

4.12 Cabinet Heater Remote Lockout Reset Wiring

IMPORTANT
Look at wiring diagram in heater to determine if remote lockout reset is to neutral or live.
Improper connection will damage burner control.

Only horizontal or external heaters are wired to accept remote lockout warning and reset facilities.

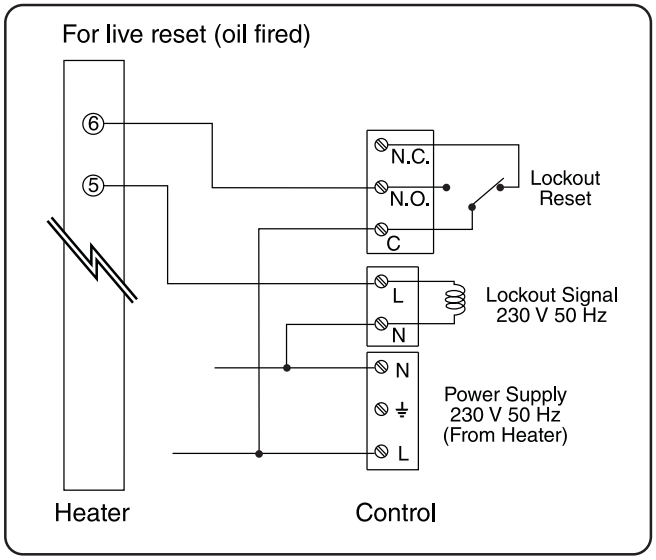

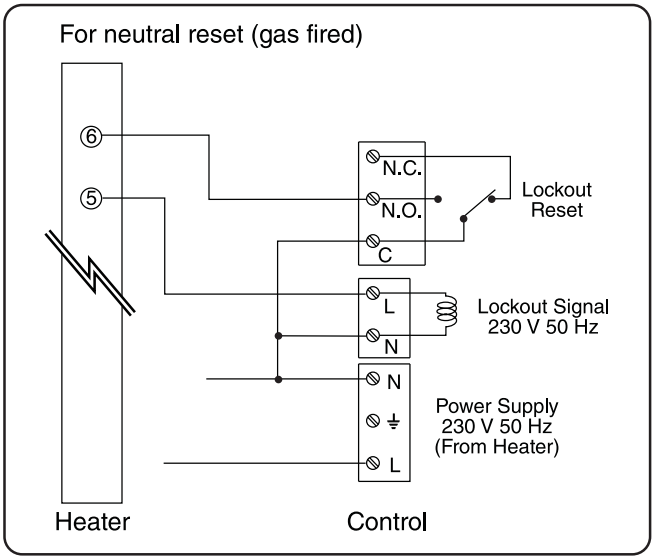

4.13 Unitary Radiant System Wiring

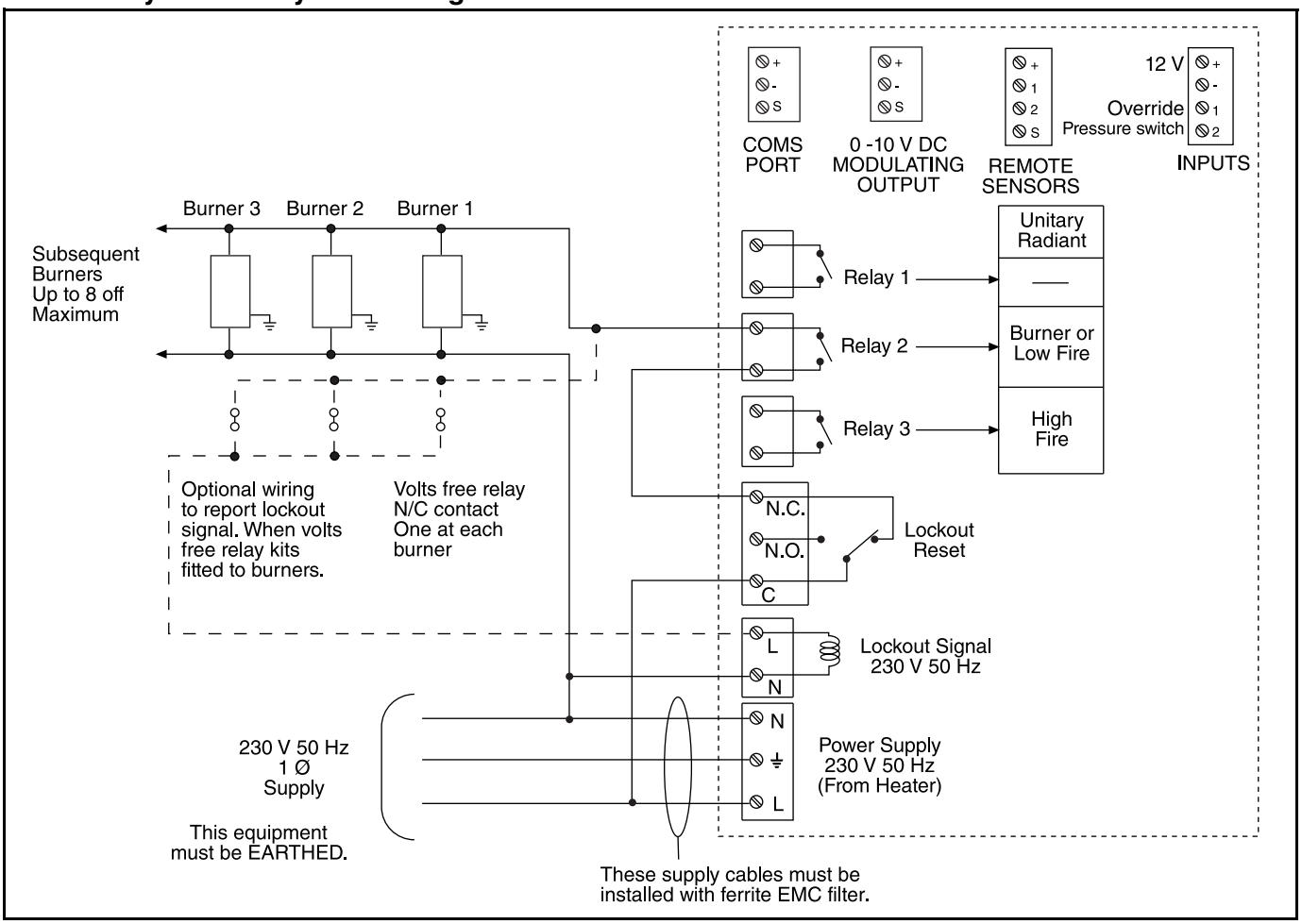

4.14 CORAYVAC® and Multiburner Systems Wiring

⚠ CAUTION

Product Damage Hazard

Do not directly connect control relay terminals to pump motor.

Failure to follow these instructions can result in product damage.

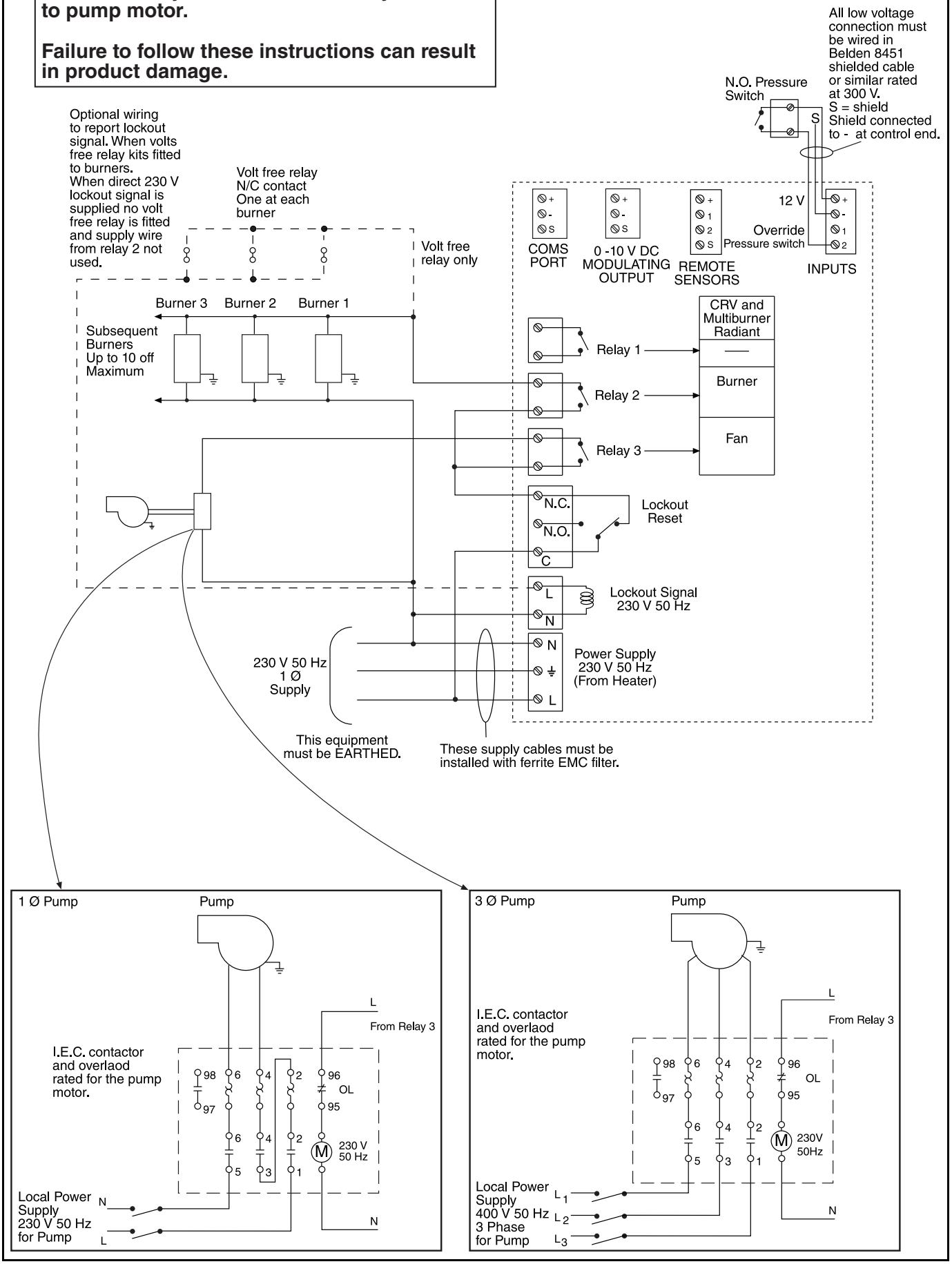

SECTION 5: PROGRAMMING AND OPERATION

5.1 Stand Alone Unit

The control has three basic levels of operation / programming.
By default if a control is not connected to a network, then it assumes stand alone status.

1. Open level where access is open to anyone at all times. *see Page 20, Section 5.3.2*.
2. Manager level, where settings may be changed for normal operation, accessed through the manager code, which may be changed to one that can be remembered by the user. *See Page 25, Section 5.5*.
3. Engineer level where system settings may be changed and accessed via engineer code, which is not changeable. *See Page 31, Section 5.6*.

The following sections break down tasks available and detail steps to be taken in each level.

SEQUENCE FOR SETTINGS

Set the functions in the order:

1. Set Configuration; *Page 33, Section 5.6.3*.
2. Calibrate temperature sensor; *Page 36, Section 5.6.5*.
3. Set optimisation; *Page 32, Section 5.6.2*.

The remainder of the settings may be undertaken in any order.

5.2 Network Unit

For network units, all functions of *Section 5.1* are the same. The open level will allow similar functions on all network controls from a base unit or from any other network control, dependent on how the individual units have been site configured. *See Page 21, Section 5.4* for options.

Networked units will need to be configured for network options. *See Page 31, Section 5.6.1*.

SEQUENCE FOR SETTINGS

1. Configure each control for the network. *See Page 31, Section 5.6.1*.
2. Configure each controller for its use with the engineers code. *See Page 31, Section 5.6*.
3. Set operational settings with the manager code. *See Page 25, Section 5.5*.

Sequences 1 and 2 must be carried out at each networked station and may be carried out together. Sequence 3 may be carried out from any "full control" station for all other stations where operating times and temperatures may be copied from one control to another.

5.3 System Language

The ROBERTS GORDON® NRG Control has been programmed to display in 5 languages.
To select or change the language *See Page 19, Section 5.3.1*.

5.3.1 Set System Language

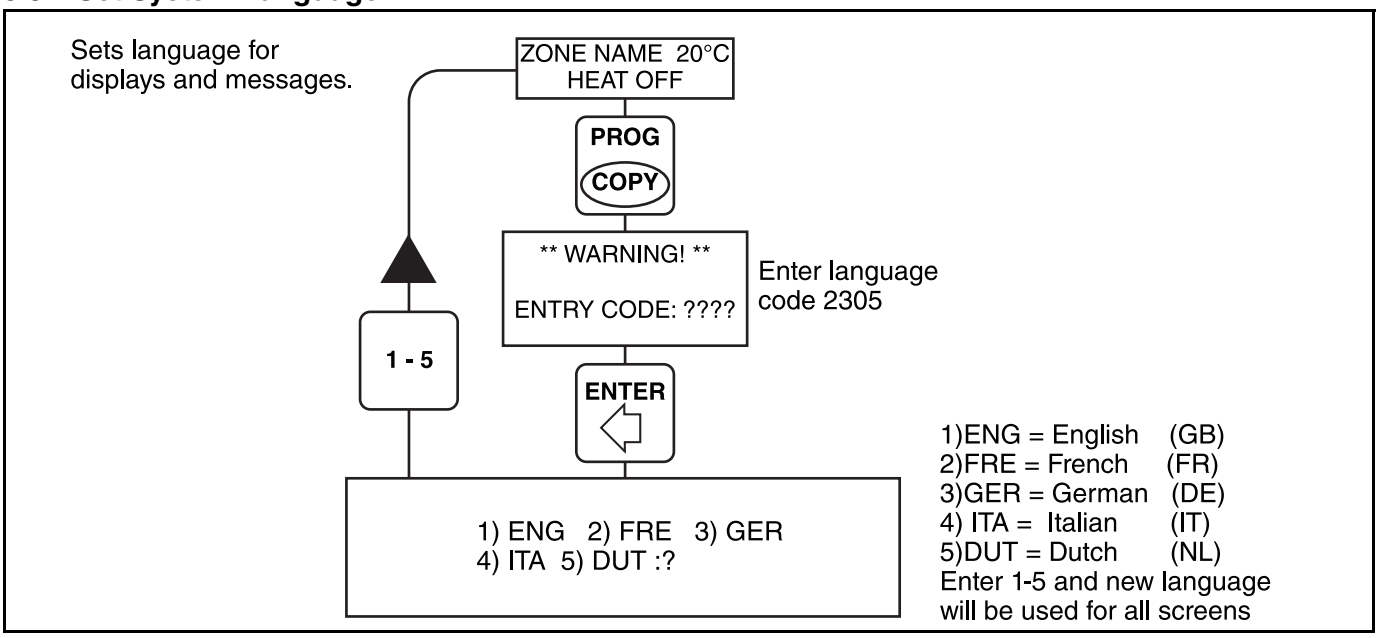

5.3.2 Default Settings

The following settings are factory defaults and will be active following a system reset.

Function	Section	Default Setting
Network Setting		Stand Alone
Network Defaults		
Network Access Code	*5.6.1*	Empty
Network Configuration Code		4143 Fixed
Network ID	*5.6.1*	00
Control Name	*5.6.1*	Empty
Network Access	*5.6.1*	Full
Burner Lockout Reset from Network	*5.6.1*	Off
Manager Setting Defaults		
Manager Access Code	*5.5.4*	0000
User Access Code	*5.5.4*	0000
Daytime Temperature	*5.5.2*	20° C
Night Temperature	*5.5.2*	04° C
Operating Times	*5.5.3*	08:00 17:00 Mon - Fri OFF Sat - Sun
Engineer Setting Defaults		
Engineer Access Code		6343 fixed
Optimisation Rate of Change Maximum Pre-Heat Hours	*5.6.2*	On On 15 minutes / ° 02
Burner Operation Burner Modulation Differential Double Ignition	*5.6.3*	On/Off Off 02° 0 OFF (Always Leave OFF)

5.4 Network Open Level User Functions

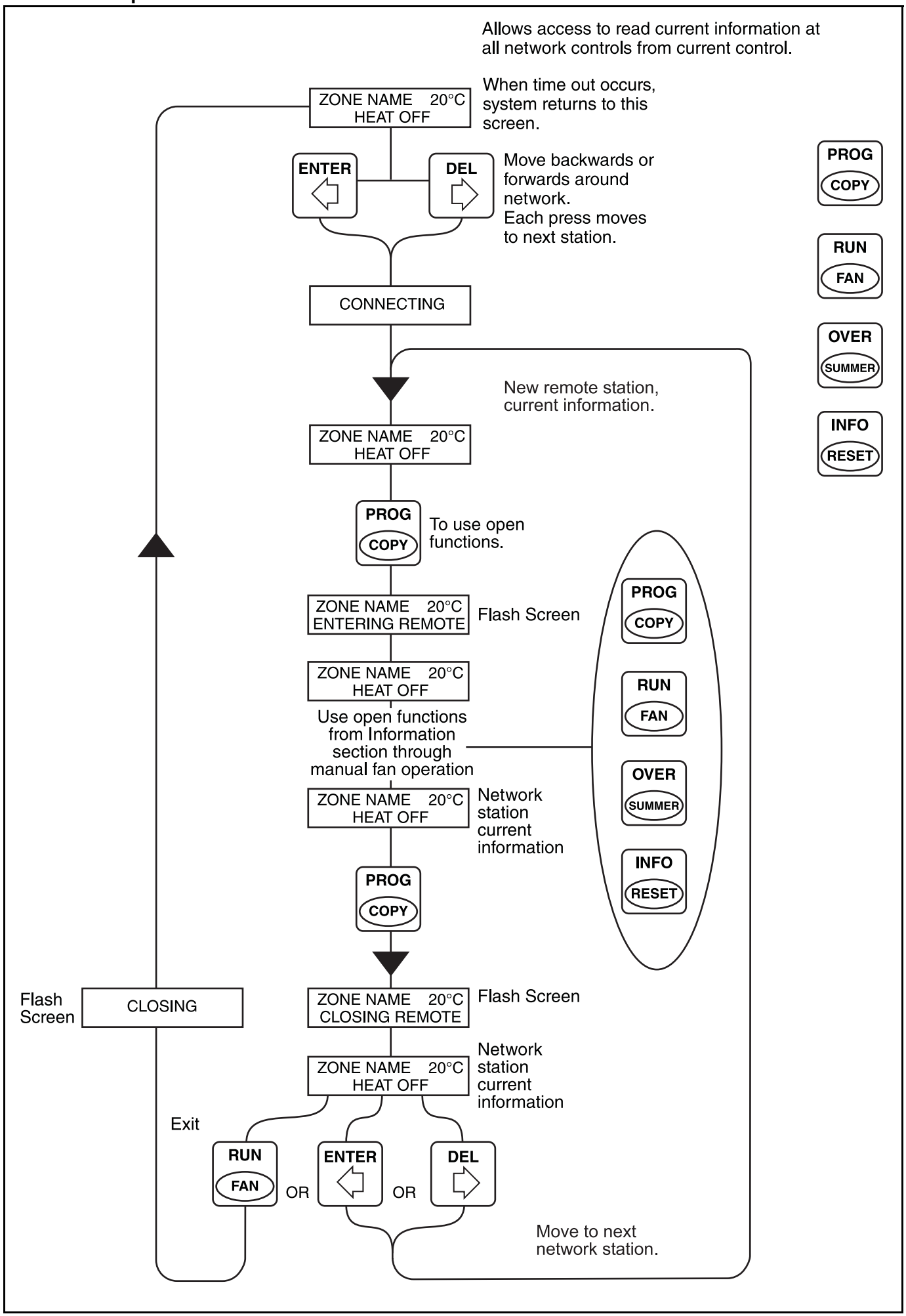

5.4.1 Information

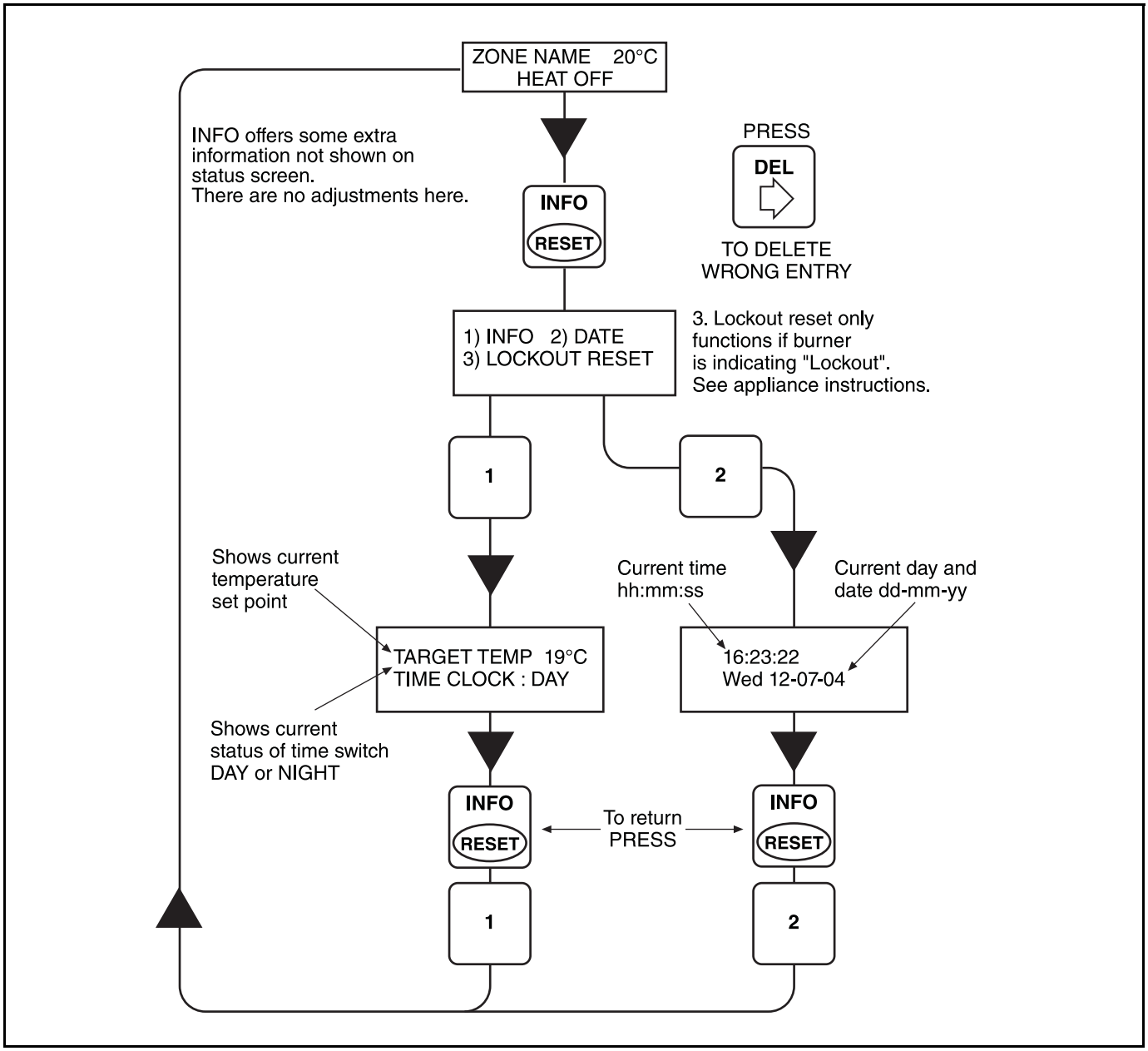

5.4.2 Lockout Reset

⚠ WARNING

Explosion Hazard

If control locks out, do not make more than three attempts to restart the heater.

Dangerous gas mixtures can build up.

The fault must be traced and repaired by a registered installer or service engineer.

Failure to follow these instructions can result in death, injury or property damage.

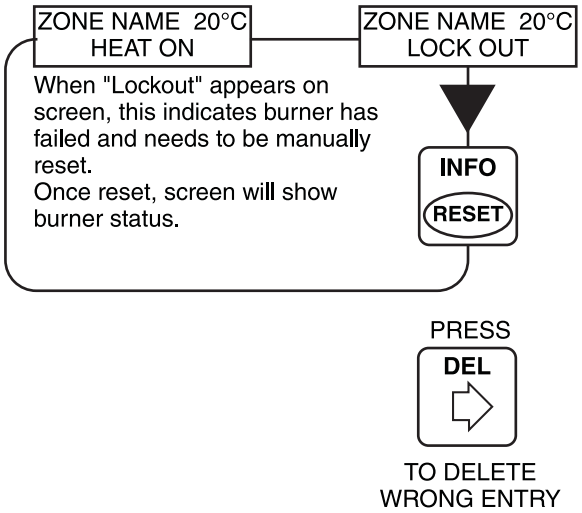

5.4.3 Override and Summer Mode

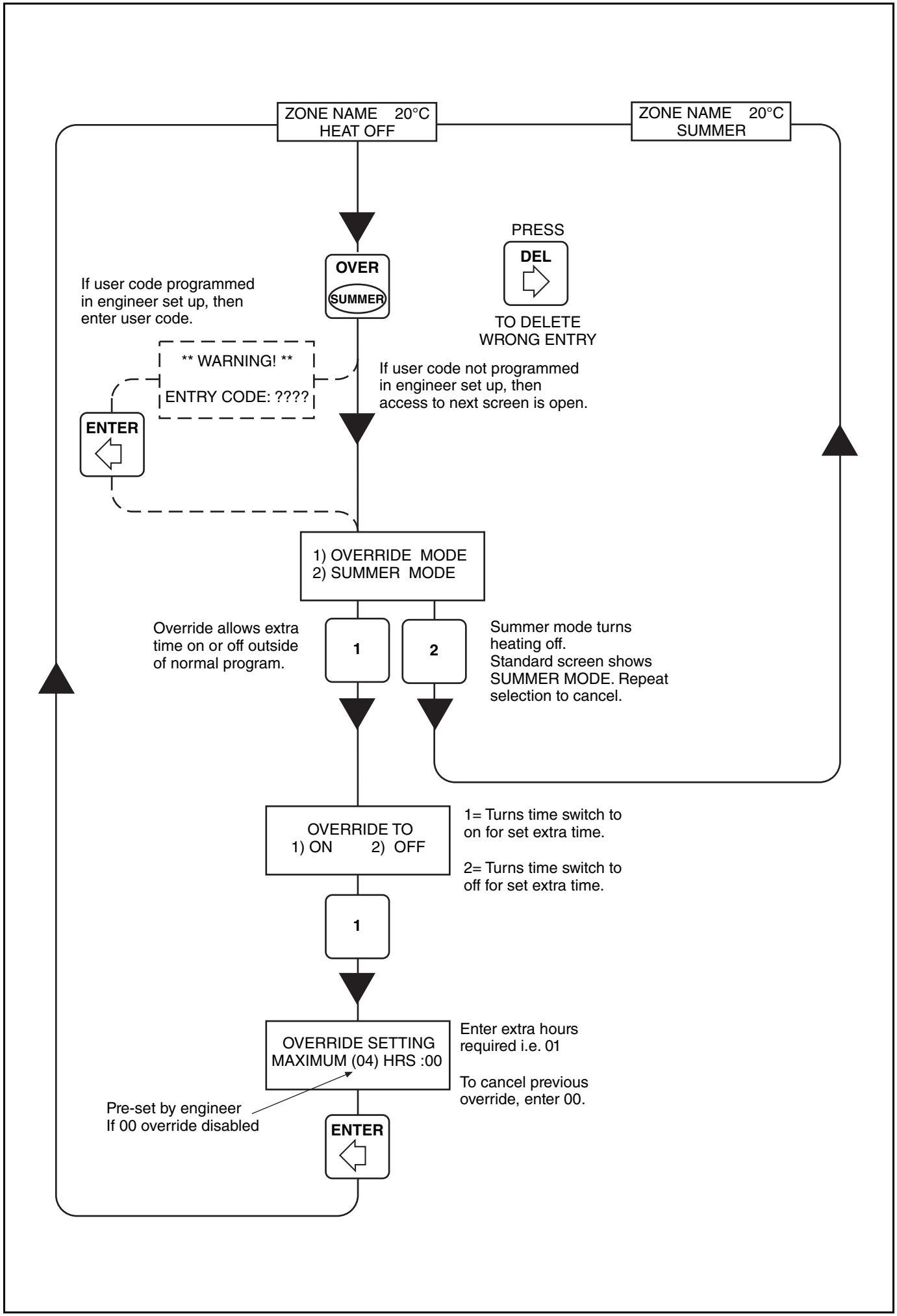

5.4.4 Manual Fan Operation

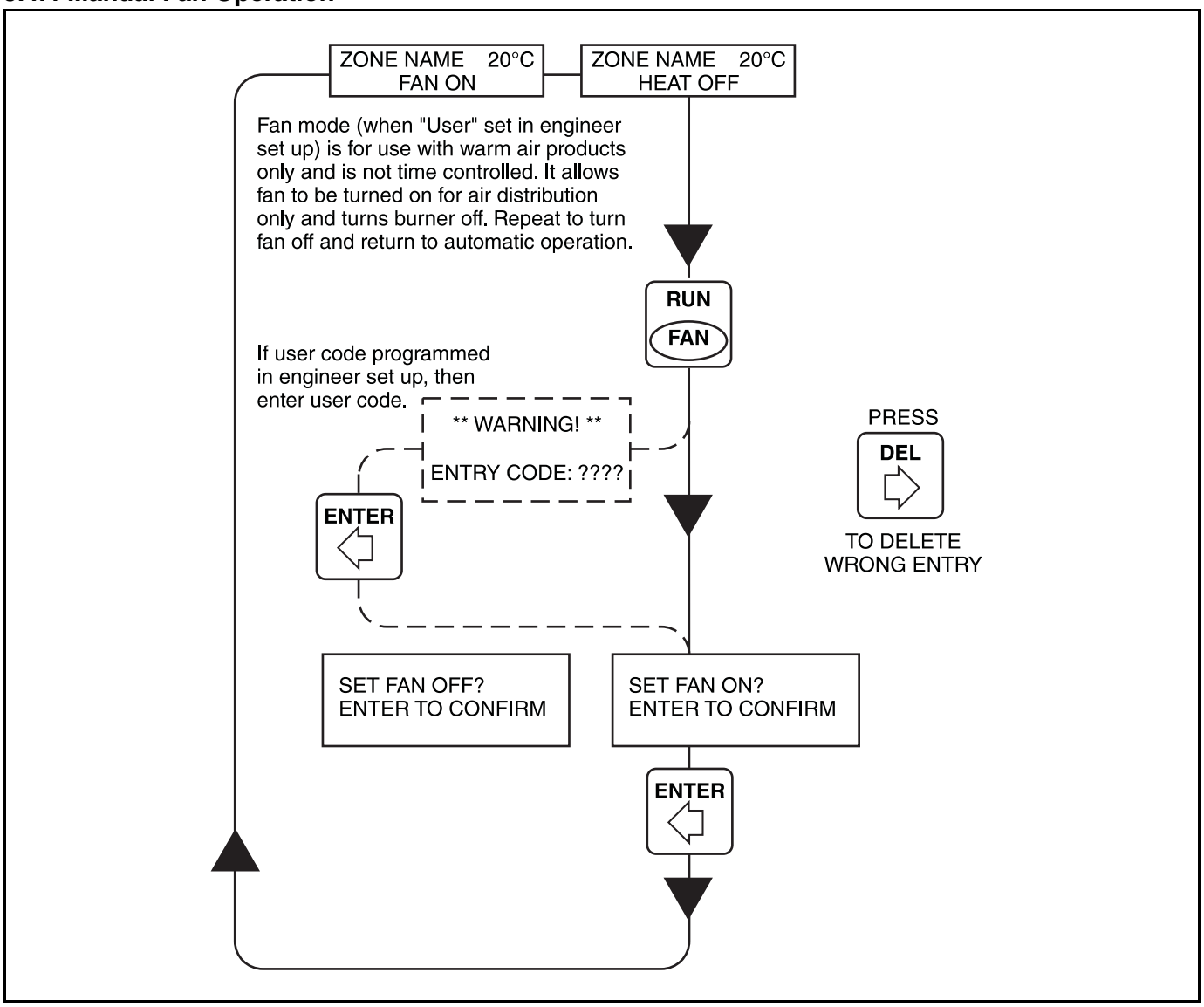

5.5 Manager Settings

5.5.1 Manager Network Access

Network access (to make operational changes) from network access code (default 1111)

Allows access to set operating settings for all controls on the network from the current location. Not operational on stand alone units.

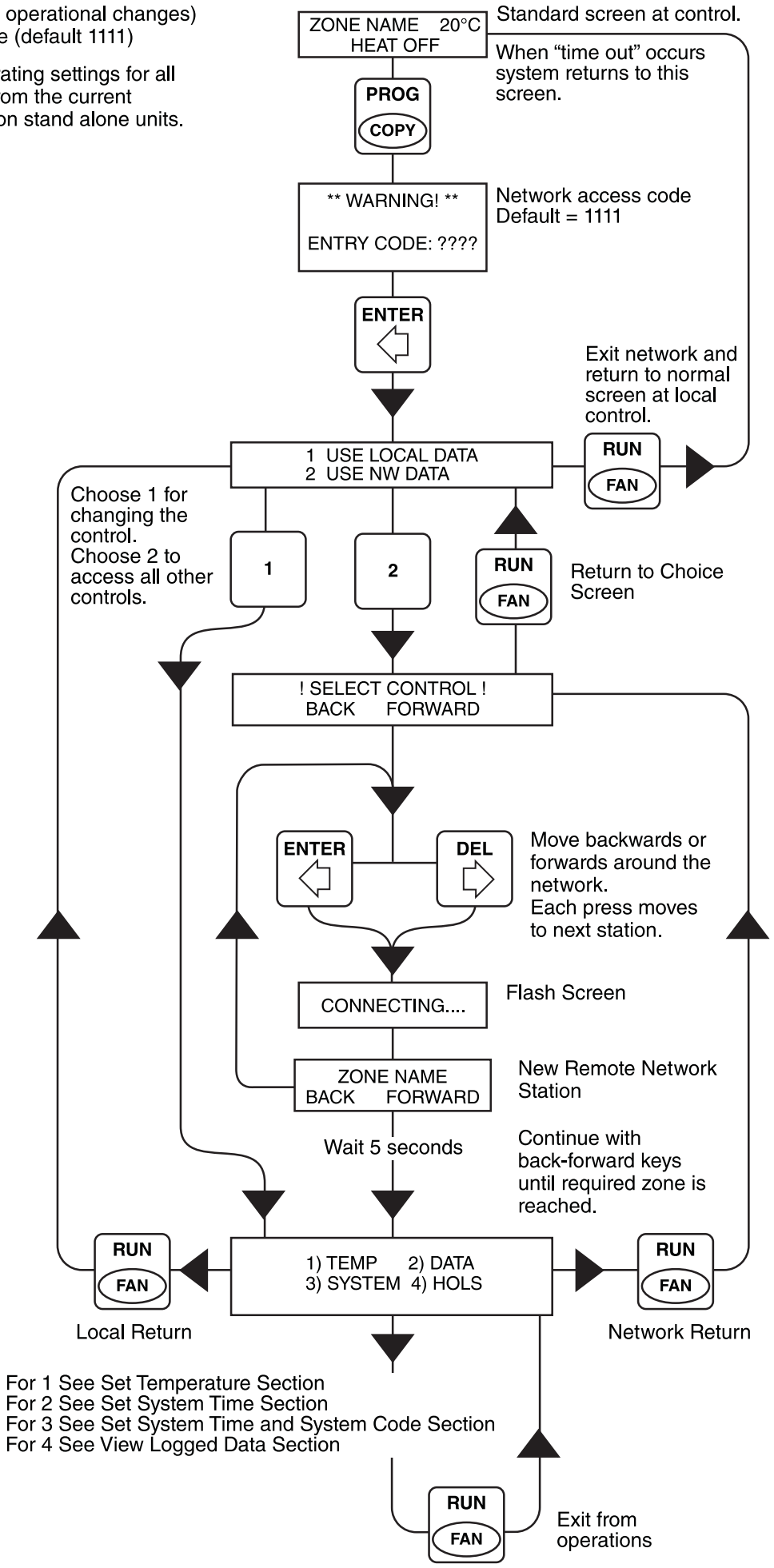

5.5.2 Set Temperature

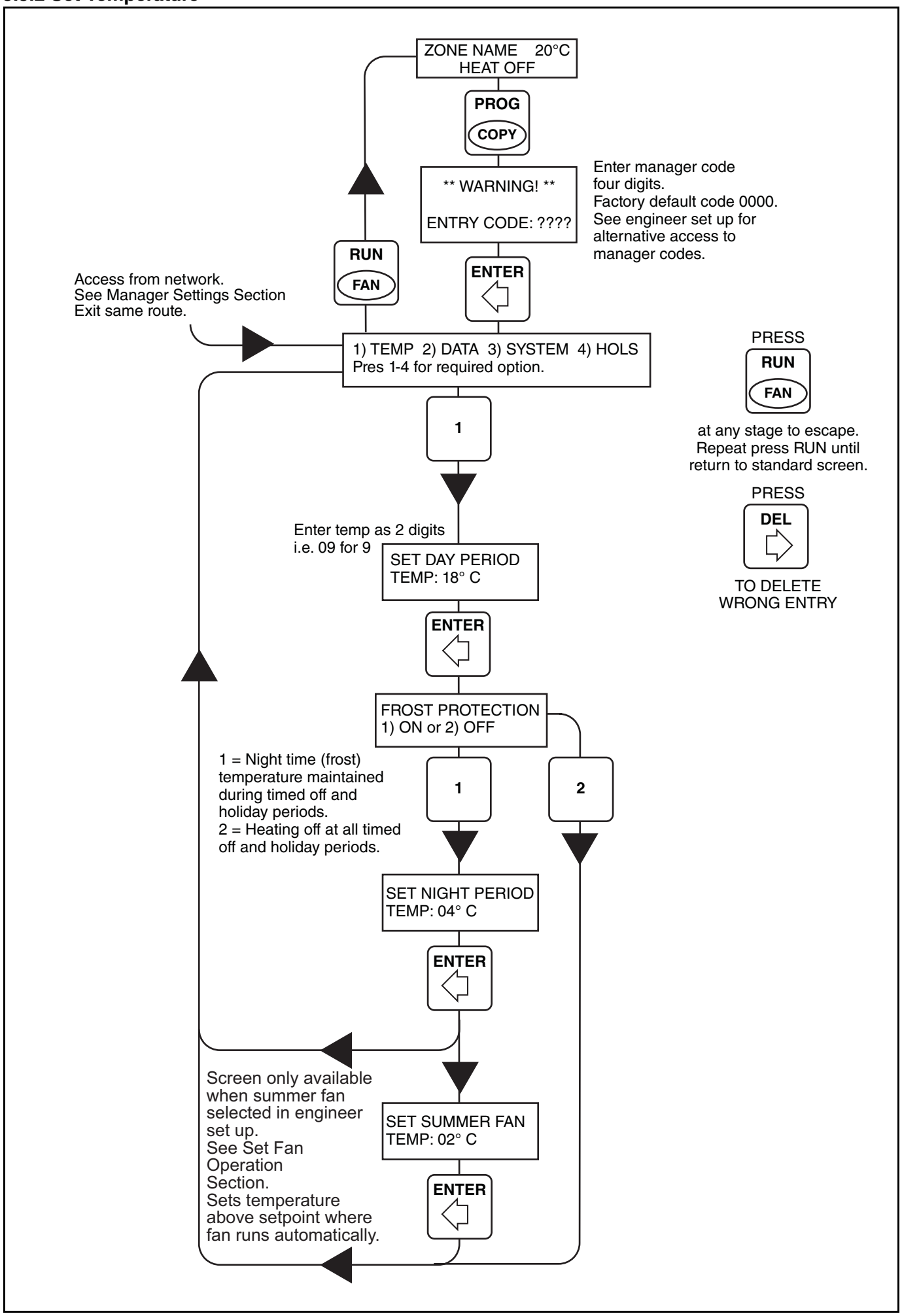

5.5.3 Set Operating Times

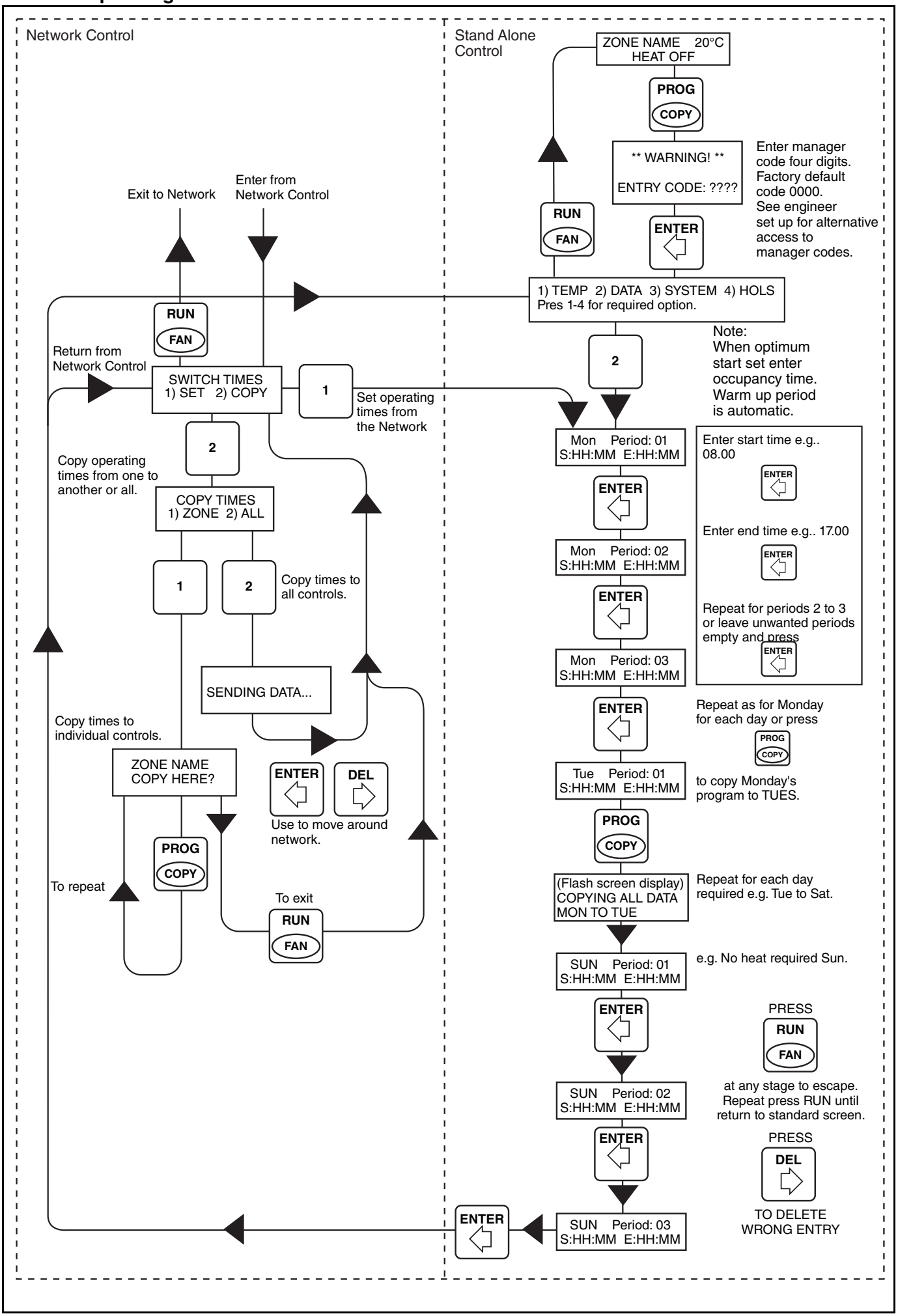

5.5.4 Set System Time and System Code

System Time
Sets current time and date for control to operate.
Use this function to change times at daylight saving time changes if automatic operation has been disabled.

System Code
Set access code for manager (to change operating settings) or operator code to limit access to override function.

NOTE: For networked controls, set control 01 and other controls will pick up the same date and time.

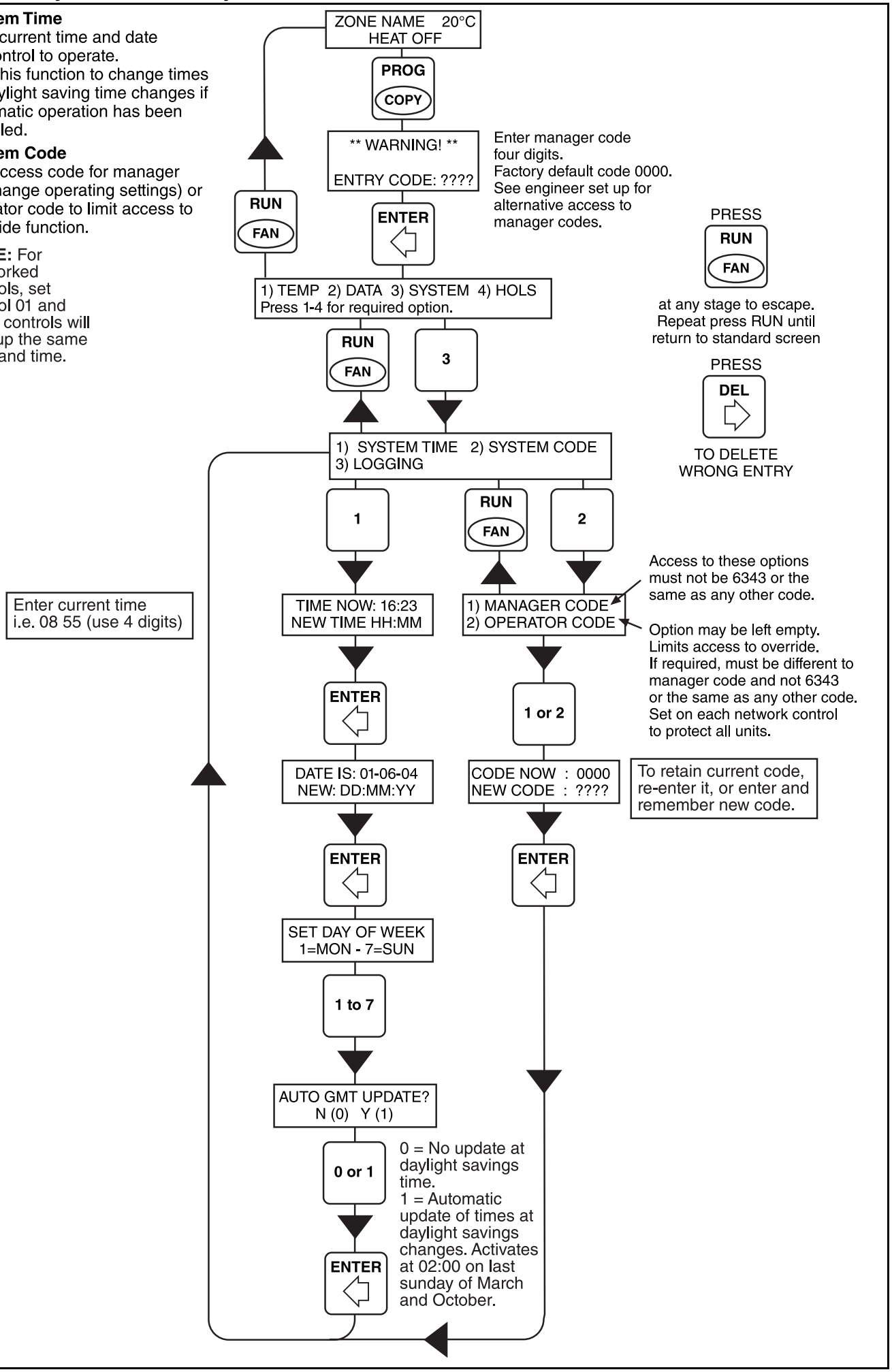

5.5.5 View Logged Data

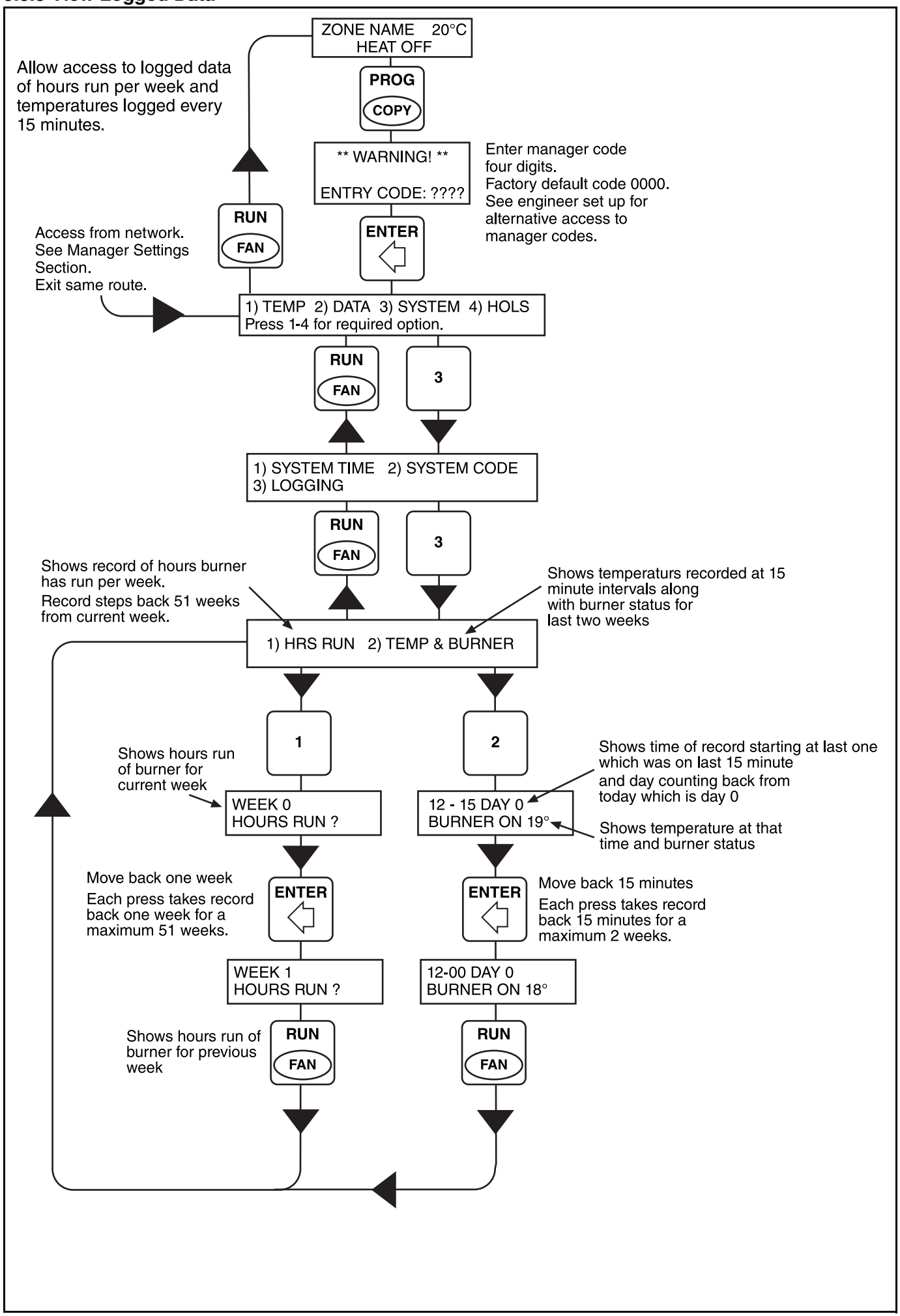

5.5.6 Set Holiday Period

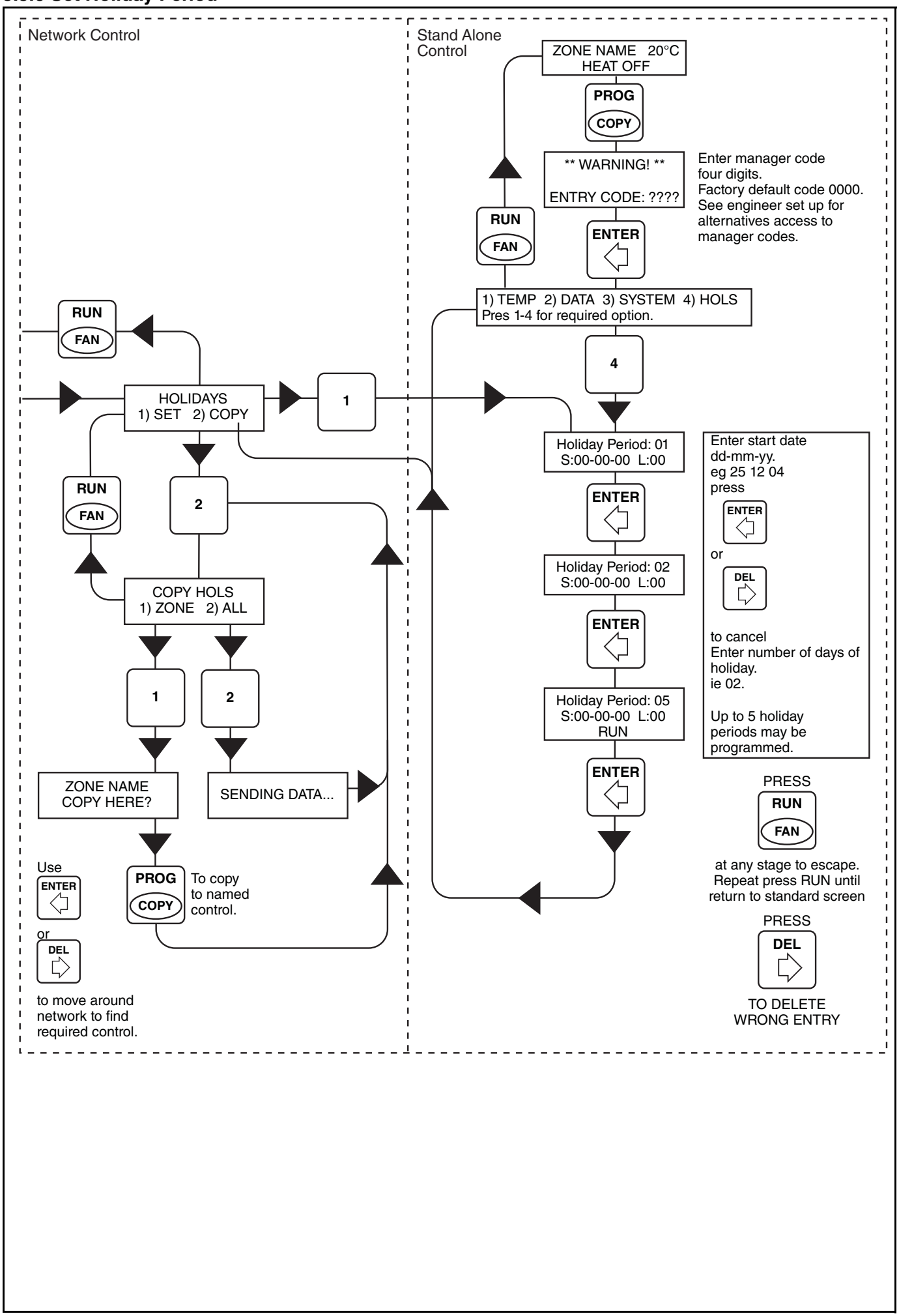

5.6 Engineer Settings

All engineer settings must be carried out at individual control.

5.6.1 Network Configuration

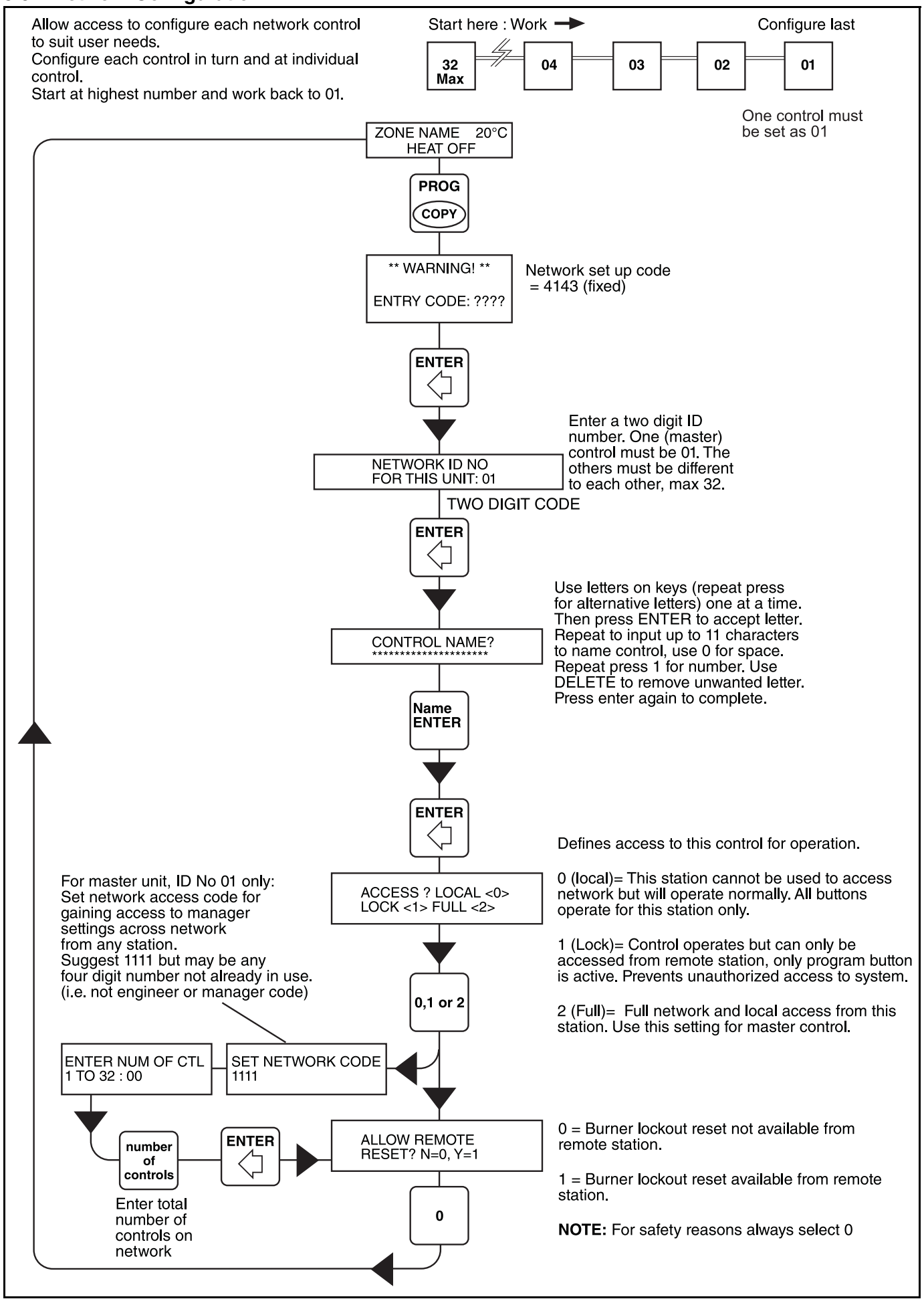

5.6.2 Set Override Hours and Optimisation

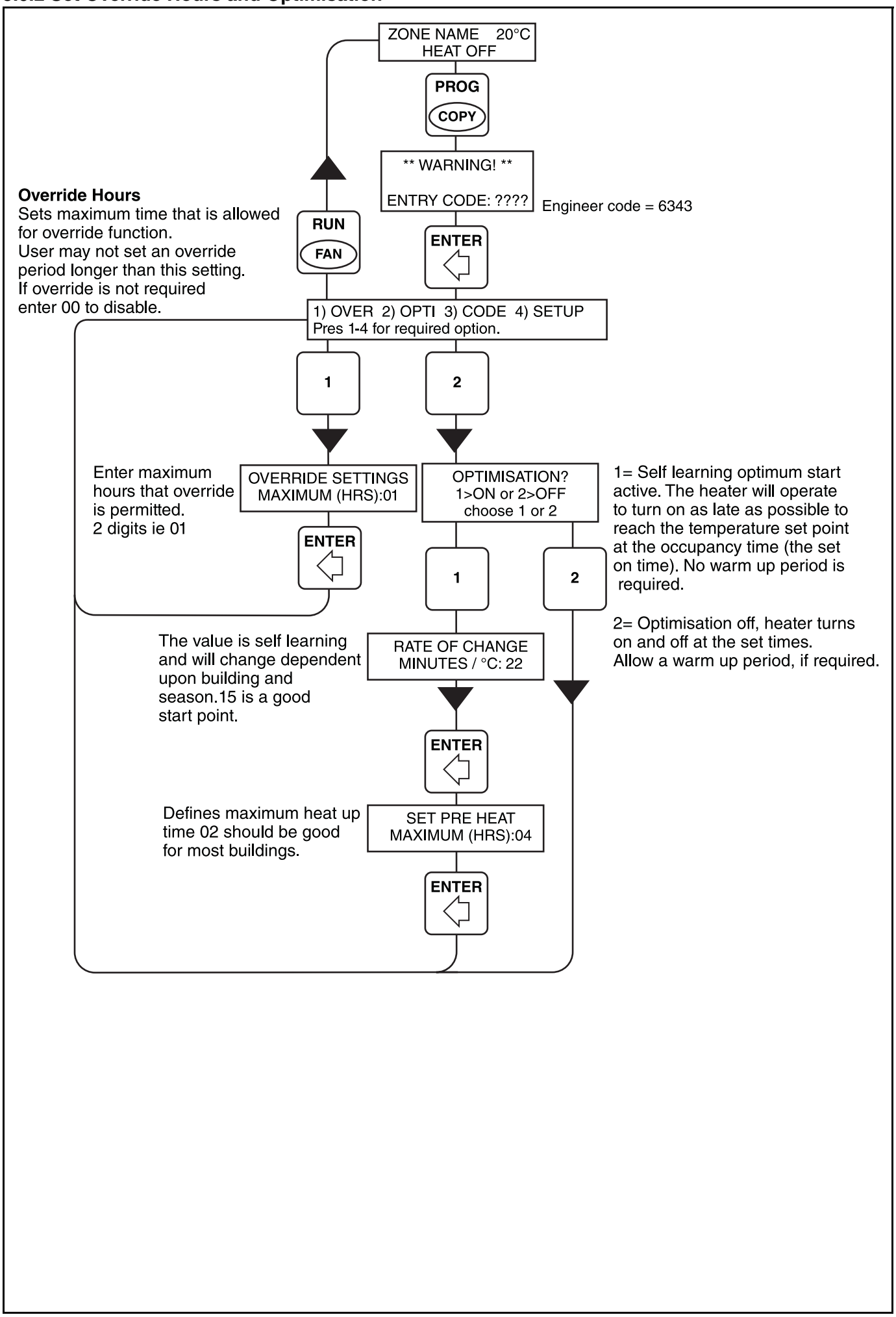

5.6.3 Set Access Code and Configure

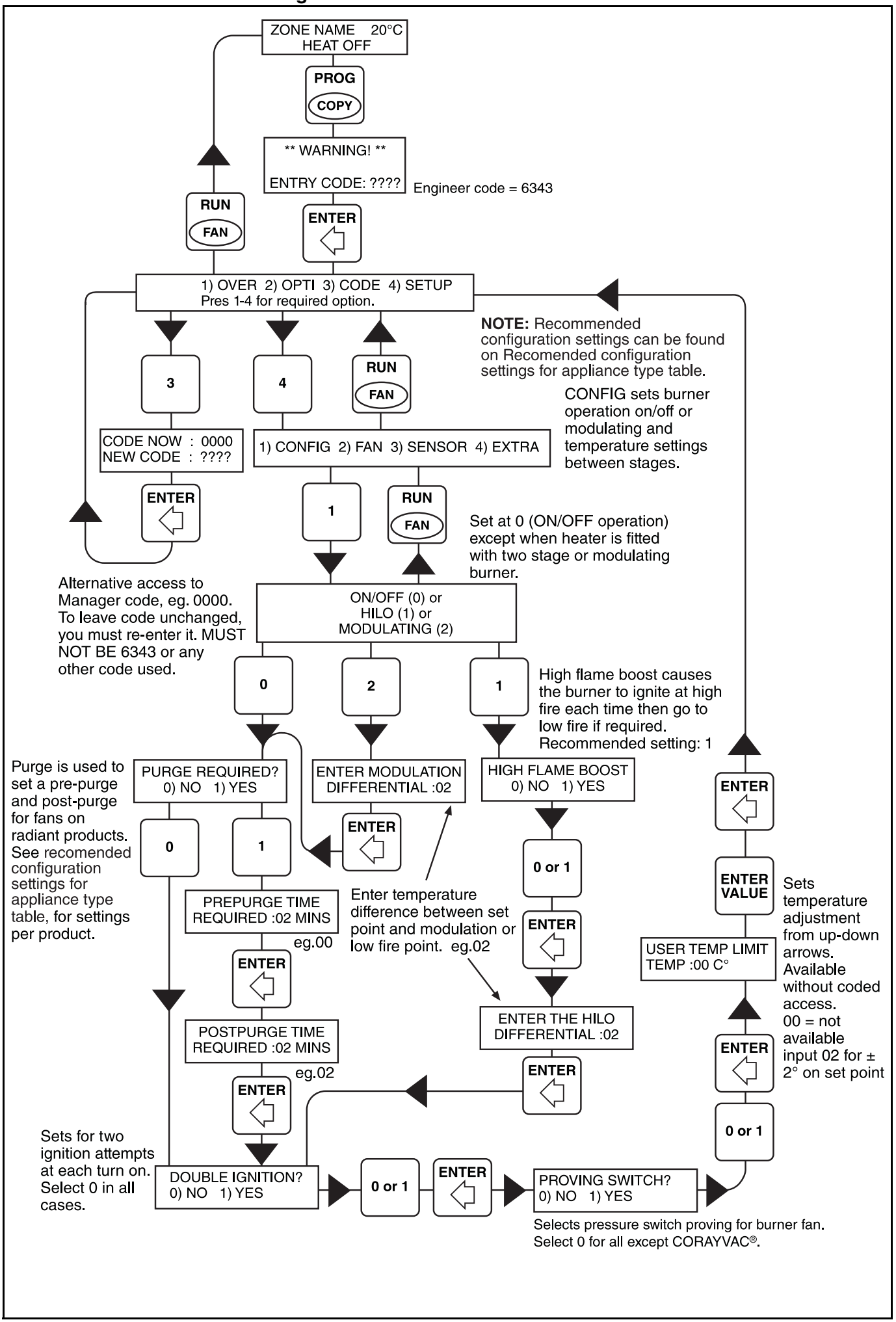

Table 1: Recommended Configuration Settings for Appliance Type

Function Type Screen path from engineer code	ON/OFF HI/LO 4 - 1	High Flame Boost 4 - 1 - (1)	Fan Purge 4-1-(0 or 2)-1	Double Ignition 4 - 1 - (0, 1 or 2)	Pressure Switch 4-1-(0, 1 or 2)	Fan Options 4 - 2
Burner Options - Warm Air Heaters						
ON/OFF	0	N/A	0	0	0	See below
High/Low Operation	1	1	N/A	0	0	See below
Modulating Operation	2	N/A	N/A	0	0	See below
Fan Options - Warm Air Heaters						
Constant Fan with Time	Burner Options - See Above					1
Automatic Summer Fan						2
Normal Fan						0 (default)
Radiant Systems						
Unitary Tube Heaters	0	N/A	0	0 or 1	0	N/A
Plaque Heaters	0	N/A	0	0 or 1	0	N/A
Linear Tube Heaters	0	N/A	0	0 or 1	0	N/A
BLACKHEAT® Multiburner Systems	0	N/A	1 Pre-Purge 00 Post-Purge 03	0	0	N/A
CORAYVAC® Single Zone Systems	0	N/A	1 Pre-Purge 00 Post-Purge 03	0	1	N/A

5.6.4 Set Fan Operation

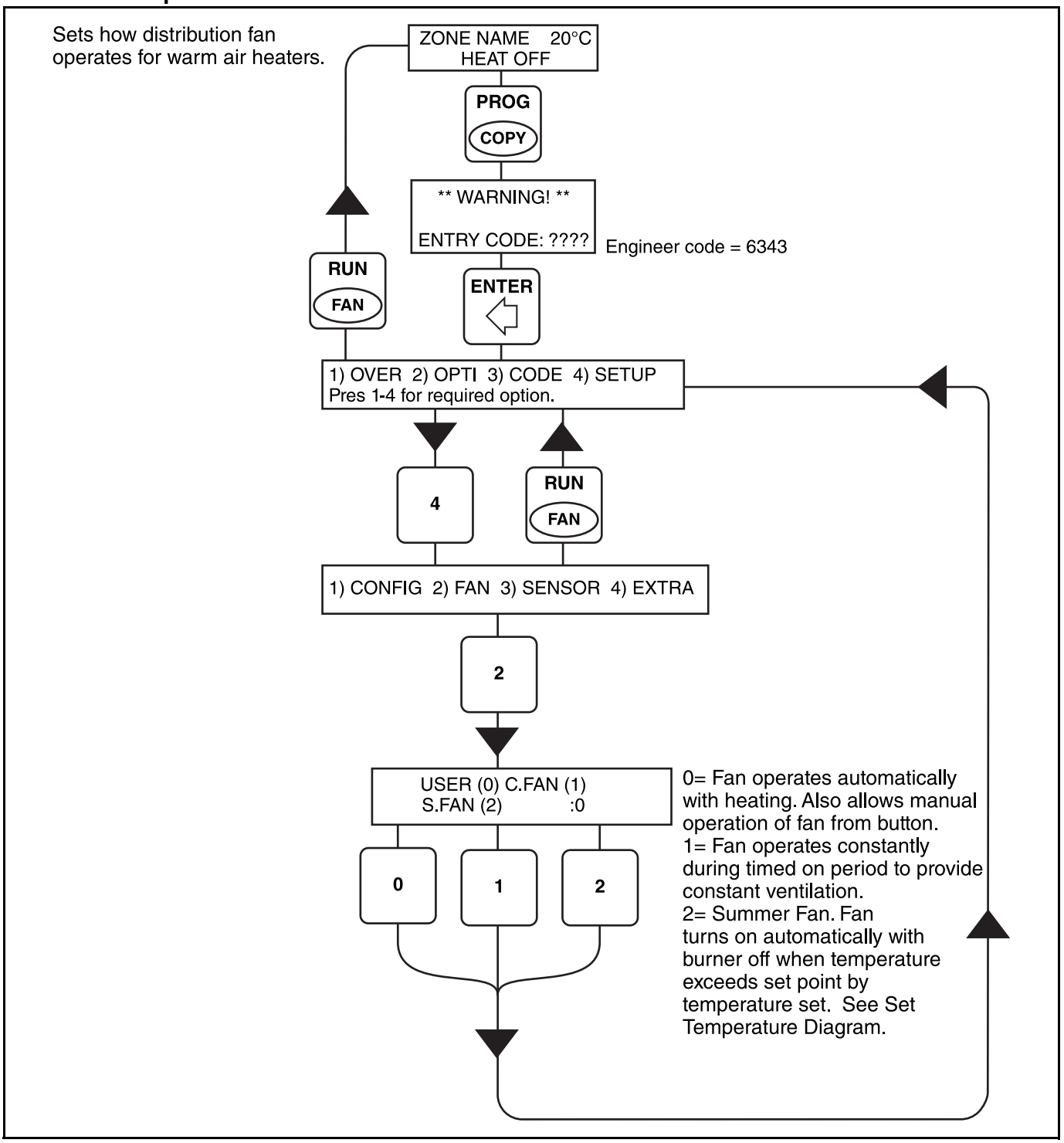

5.6.5 Set Sensor Calibration

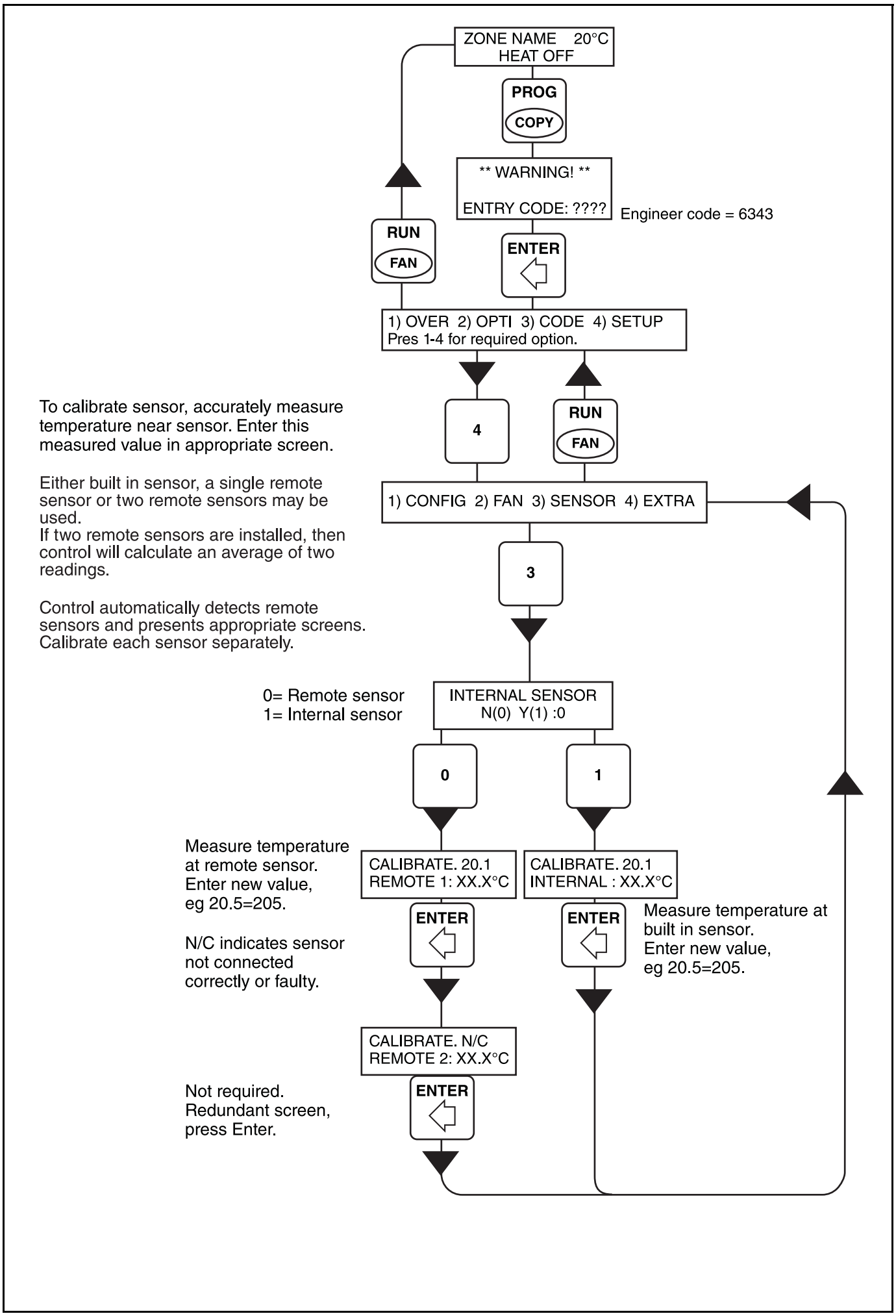

5.6.6 Set Service Mode

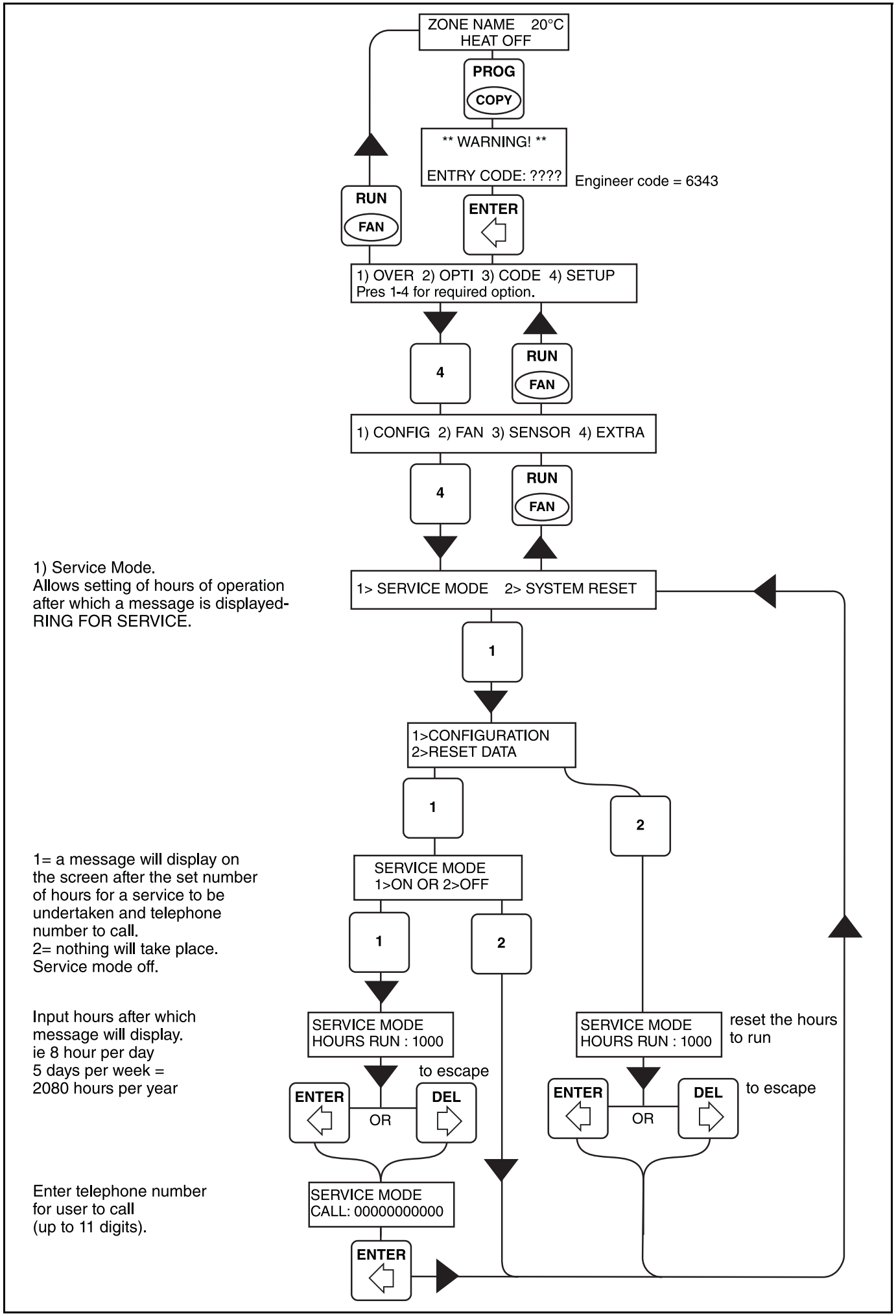

5.6.7 System Reset

Resets all data to default settings.
All features will need to be checked.
All programmed times and settings,
will need re-entry.

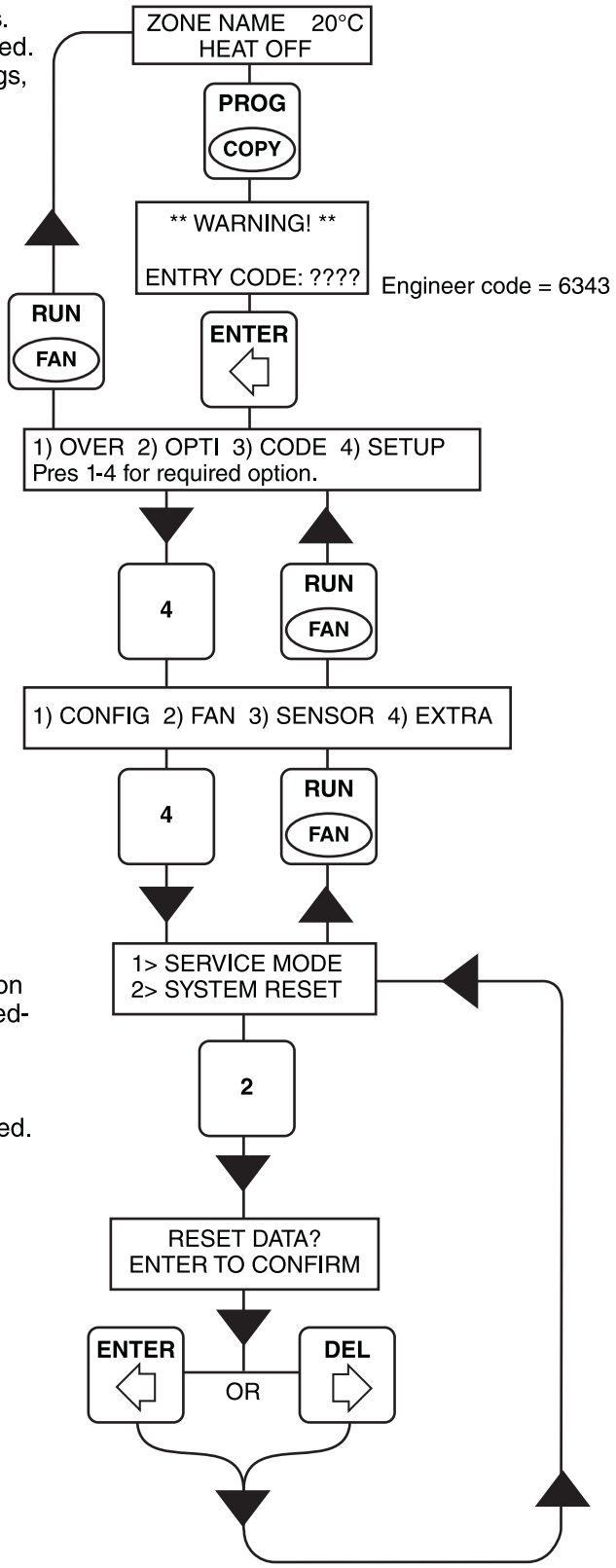

1) Service Mode.
Allows setting of hours of operation
after which a message is displayed-
RING FOR SERVICE.
2) System Reset.
Resets all data to default settings
All features will need to be checked.

SECTION 6: STANDARD SCREEN MESSAGES

6.1 Stand Alone Control Screen Messages

ZONE NAME 20°C HEAT OFF	= Heating off due to time or temperature being satisfied.
ZONE NAME 20°C HEAT ON	= Heating on and operating, may be modulating for modulating burner.
ZONE NAME 20°C STATUS PRE HEAT	= Heating on during pre-heat time, before programmed start time controlled by optimum start.
ZONE NAME 20°C SWITCH OPEN	= On CORAYVAC® systems, pressure switch in open position.
ZONE NAME 20°C SWITCH CLOSED	= On CORAYVAC® systems, pressure switch in closed position.
ZONE NAME 20°C HI FLAME BOOST	= Heating on full at turn on, for two stage burners.
ZONE NAME 20°C LOW:ON HIGH:OFF	= Heating on low flame, for two stage burners.
ZONE NAME 20°C LOW:ON HIGH:ON	= Heating on high flame, for two stage burners.
ZONE NAME 20°C LOW:OFF HIGH:OFF	= Heating off, for two stage or modulating burners.
ZONE NAME 20°C STATUS: FAN ON	= For warm air, fan set manually to run continuously with burner off. See Manual Fan Operation Section.
ZONE NAME 20°C STATUS: SUMMER	= Control in summer mode. Manually set to turn heating off. See Over Ride Summer Mode Section.
ZONE NAME 20°C STATUS: OVERRIDE	= Control in override mode. The manual override has been set and screen will also show a count down of remaining time for override. See Information Section.
ZONE NAME 20°C STATUS: HOLIDAY	= Control has been programmed for a holiday period and is maintaining frost protection only. See Section 5.5.5 to cancel.
TARGET TEMP:19°C TIME CLOCK: DAY	= Information screen showing current temperature set point and time switch status. Press INFO: 2 to return to standard screen.
10:20:55 Fri 06-05-05	= Information screen showing current time and date. Press INFO: 2 to return to standard screen.
ZONE NAME 20°C SERVICE CALL 019???	= Indicates as a flash screen alternating with normal status screen. The heater/s require a service due to completion, pre-set hours run. This is not a fault condition, the equipment will continue to operate. See Set Service Mode Section.

6.2 Network Control Screen Message

ZONE NAME 20°C UNDER NW CONTROL	= This control currently being accessed by another network control.
NETWORK ERROR 01	= This control cannot connect to the network. Check network wiring and configuration. See Network Wiring Section.
KEYPAD LOCKED	= Network control that has been locked during network configuration. See Network Configuration Section. No access is allowed at this control. Use master control to carry out adjustments.

Page 39, Section 6.1 screen messages also apply to network controls.

6.3 Fault Messages

ZONE NAME N/C HEAT OFF	= Fault with remote temperature sensor or sensor wiring.
ZONE NAME 20°C STATUS: LOCKOUT or RESET SWITCH ILLUMINATED	= Warm air heater - burner in lockout. Radiant systems - one of the connected burners on lockout. (NOTE: There is a 3 minute delay between lockout occurring and display on control). **See Warning Below.**
ZONE NAME 20°C STATUS: RESET 45	= Lockout reset operating on countdown from 45 seconds.
SWITCH = OPEN	= System configured for pressure switch when heating system is not a CORAYVAC®.
SWITCH = OPEN	= System is a CORAYVAC® but pressure switch is not making during call for heat.
CLOCK FAULT	= NO function on control. Eliminate by switching off power to control, removing battery for minimum 1 minute before refitting battery and restoring power.

⚠ WARNING

Explosion Hazard

If control locks out, do not make more than three attempts to restart the heater.

Dangerous gas mixtures can build up.

The fault must be traced and repaired by a registered installer or service engineer.

Failure to follow these instructions can result in death, injury or property damage.