FOR YOUR SAFETY
If you smell gas:

1. **Open windows.**
2. **DO NOT try to light any appliance.**
3. **DO NOT use electrical switches.**
4. **DO NOT use any telephone in your building.**
5. **Extinguish any open flame.**
6. **Leave the building.**
7. **Immediately call your local gas supplier after leaving the building. Follow the gas supplier's instructions.**
8. **If you cannot reach your gas supplier, call the Fire Department.**

⚠ WARNING

Fire Hazard

Keep all flammable objects, liquids and vapours the minimum required clearances to combustibles away from heater.

Some objects will catch fire or explode when placed close to heater.

Failure to follow these instructions can result in death, injury or property damage.

ROBERTS GORDON

Blackheat®

Vacuum Assisted Linear, Double Linear, U-Tube, and Multi-Burner Gas Fired Heating Systems

Installation, Operation & Service Manual

BH15UT
BH20UT
BH25UT/EF
BH30UT/EF
BH35UT/EF
BH40UT/EF
BH45UT/EF
BH50UT/EF

BH15ST
BH20ST
BH25ST/EF
BH30ST/EF
BH35ST/EF
BH40ST/EF
BH45ST/EF
BH50ST/EF
BH55ST

BH30DL
BH40DL
BH50DL/EF
BH60DL/EF
BH70DL/EF

⚠ WARNING

Improper installation, adjustment, alteration, service or maintenance can result in death, injury or property damage. Read the installation, operation and service manual thoroughly before installing or servicing this equipment.

Installation must be done by a registered installer/ contractor qualified in the installation and service of gas-fired heating equipment or your gas supplier.

Installer

Please take the time to read and understand these instructions prior to any installation. Installer must give a copy of this manual to the owner.

Owner

Keep this manual in a safe place in order to provide your service technician with necessary information.

CE

Roberts-Gordon Europe Limited
Unit A, Kings Hill Business Park
Darlaston Road, Wednesbury
West Midlands WS10 7SH UK
Telephone: +44(0)121 506 7700
Fax: +44(0)121 506 7701
Service Telephone: +44(0)121 506 7709
Service Fax: +44(0)121 506 7702
E-mail: uksales@rg-inc.com
E-mail: export@rg-inc.com

www.blackheatheaters.co.uk
www.robertsgordon.co.uk
www.rg-inc.com

© 2014 Roberts-Gordon Europe Limited

170101UK Rev. T 09/14

TABLE OF CONTENTS

SECTION 1: Heater Safety 2
1.1 Manpower Requirements 2
1.2 Safety Labels and Their Placement 2
SECTION 2: Installer Responsibility 4
2.1 Low Level User Instructions 4
2.2 Corrosive Chemicals 4
2.3 National Standards and Applicable Codes 4
SECTION 3: Clearances to Combustibles 5
3.1 Required Clearances to Combustibles 5
3.2 Clearance Data - Linear and Double Linear 6
3.3 Clearance Data -U Tube 8
SECTION 4: Major Component Descriptions 10
SECTION 5: General Suspension Details 11
SECTION 6: Linear & Double Linear Heater Installation 13
6.1 Linear Standard Parts List 13
6.2 Double Linear Standard Parts List 16
6.3 Burner Tube Installation 19
6.4 Coupling and Tube Assembly 19
6.5 Tube Clamp Package Installation 21
6.6 Reflector Installation 22
6.7 Double Linear Tee Installation (for double linear heaters only) 24
SECTION 7: U-Tube Heater Installation 25
7.1 U-Tube Standard Parts List 25
7.2 U-Tube Hanger Placement 29
7.3 Burner Tube and Fan Tube Installation 29
7.4 U-Tube Support Bracket Assembly Installation 30
7.5 Coupling and Tube Assembly 31
7.6 Tube Installation 32
7.7 U-Tube Installation 32
7.8 Reflector Installation 33
SECTION 8: Multiburner Configuration & Installation 35
8.1 Initial Assembly 35
SECTION 9: Burner & Fan Installation 37
9.1 Burner Installation 37
9.2 Fan Assembly 37
9.3 Linear & U-Tube Fan Installation 38
9.4 Double Linear Fan Installation 38
9.5 Multiburner 83 BWLG / 90 BWTL Fan Assembly (Horizontal and Vertical Outlets) 39
9.6 Condensate Drain Assembly 40
SECTION 10: Optional Heater Accessories 41
10.1 Reflector Side Extension Installation 42
10.2 U-Tube Cover Installation 43
10.3 Decorative Grille Installation 44
10.4 Protective Grille Installation 45
10.5 Sports Hall Guard Installation 46
10.6 Undershield Installation 47
10.7 Wall Mounting 48
SECTION 11: Venting 50
11.1 General Venting Requirements 50
11.2 Ventilation Requirements 50
11.3 Outside Combustion Air Supply 51
11.4 Common Duct 52
SECTION 12: Gas Piping 53
SECTION 13: Wiring 55
13.1 Typical External Wiring Diagram (Linear or U-Tube) 55
13.2 Typical External Wiring Diagram (Double Linear Option 1) 55
13.3 Typical External Wiring Diagram (Double Linear Option 2) 56
13.4 Typical External Wiring Diagram (Multiburner) 56
13.5 Internal Wiring Diagram 57
SECTION 14: Operation 58
14.1 Heater Lockout Indication 58
14.2 Testing 59
14.3 Commissioning (Multiburner) 59
14.4 System Checks 59
14.5 User Instructions 59
SECTION 15: Servicing Instructions 60
15.1 Annual Procedure 60
15.2 Component Removal 60
15.3 Maintenance Checklist 61
SECTION 16: Troubleshooting 63
16.1 Troubleshooting Flow Chart (Linear, Double Linear and U-Tube) 64
16.2 Troubleshooting Flow Chart (Multiburner) 66
16.3 Manifold Gas Pressure Setting 68
SECTION 17: Replacement Parts 69
SECTION 18: Specifications 71
18.1 Material Specifications 71
18.2 Heater Specifications 71
18.3 Venting Specifications 71
18.4 Suspension Specifications 71
18.5 Controls Specifications 71
18.6 Environment 71
18.7 Linear Heater 72
18.8 Double Linear Heater 72
18.9 U-Tube Heater 72
18.10 Burner Specifications 73

© 2014 Roberts-Gordon Europe Limited

All rights reserved. No part of this work covered by the copyrights herein may be reproduced or copied in any form or by any means - graphic, electronic, or mechanical, including photocopying, recording, taping or information storage and retrieval systems - without the written permission of Roberts-Gordon Europe Limited.

Printed in U.K.

TABLE OF FIGURES

Figure 1: Side and Back Panel Label Placement 2
Figure 2: Top Panel Label Placement 3
Figure 3: Linear & Double Linear, Horizontal Mounts.....6
Figure 4: Linear & Double Linear, One Side Reflector 6
Figure 5: Linear & Double Linear, Two Side Reflectors ...6
Figure 6: Linear & Double Linear, 45° Mount 6
Figure 7: Linear & Double Linear, 2 Foot Deco Grille.....7
Figure 8: Linear & Double Linear, Protective Grille.....7
Figure 9: Undershield 7
Figure 10: Linear & Double Linear, Venting.....7
Figure 11: U-Tube, Horizontal Mount.....8
Figure 12: U-Tube, One Side Reflector 8
Figure 13: U-Tube, Two Side Reflectors 8
Figure 14: U-Tube, Full 45° Mount.....8
Figure 15: U-Tube, Opposite 45° Tilt 9
Figure 16: U-Tube, Protective Grille.....9
Figure 17: U-Tube, Venting.....9
Figure 18: Critical Hanger Placement 12
Figure 19: Linear General Assembly Overview.....14
Figure 20: Linear Layout Overview 15
Figure 21: Double Linear General Assembly Overview 17
Figure 22: Double Linear Layout Overview 18
Figure 23: U-Tube Assembly Overview 27
Figure 24: U-Tube Layout Overview.....28
Figure 25: Multiburner Damper Flange Installation 35
Figure 26: Typical Manifold Layout (Linear and U-Tube Configuration).....36
Figure 27: U-Tube (Horizontal) 48
Figure 28: U-Tube (Angle Mounted) 49
Figure 29: Linear 49
Figure 30: Individual Flue Connection Detail.....51
Figure 31: Flue Connection Dimensions 51
Figure 32: Fresh Air Intake Spigot.....52
Figure 33: Air Supply with Flue Configurations 52
Figure 34: Gas Connection with Stainless Steel Flex Connector.....54
Figure 35: Sequence of Operation Chart 58
Figure 36: Burner Cup Position.....60
Figure 37: Linear and U-Tube Specifications 73

Product Approval

ROBERTS GORDON® equipment has been tested and CE certified as complying with the essential requirements of the Gas Appliance Directive, the Low Voltage Directive, the Electromagnetic Compatibility Directive and the Machinery Directive for use on natural gas and LPG when installed, commissioned and maintained in accordance with these instructions.

These instructions refer to appliances designed to operate in the European Union.

Appliances designed for other countries (Non-European Union) are available on request.

This appliance must be installed in accordance with the local and national codes in force and used only in a sufficiently ventilated space, as specified in these instructions.

Before installation, check that the local gas distribution systems, nature of gas and pressure, and adjustment of the appliance are compatible.

SECTION 1: HEATER SAFETY

Your Safety is Important to Us!

This symbol is used throughout the manual to notify you of possible fire, electrical or burn hazards. Please pay special attention when reading and following the warnings in these sections.

Installation, service and annual inspection of heater must be done by a registered installer/contractor qualified in the installation and service of gas-fired heating equipment.

Read this manual carefully before installation, operation or service of this equipment.

This heater is designed for heating nonresidential indoor spaces. Do not install in residential spaces. These instructions, the layout drawing, local codes and ordinances, and applicable standards that apply to gas piping, electrical wiring, venting, etc., must be thoroughly understood before proceeding with the installation.

Protective gear is to be worn during installation, operation and service. Thin sheet metal parts, such as the reflector portion of the heater and the various venting components, have sharp edges. To prevent injury, the use of work gloves is recommended. The use of gloves will also prevent the transfer of body oils from the hands to the surface of the reflector.

Before installation, check that the local distribution conditions, nature of gas and pressure, and adjustment of the appliance are compatible.

The heater must be applied and operated under the general concepts of reasonable use and installed using best building practices.

This appliance is not intended for use by persons (including children) with reduced physical, sensory or mental capabilities, or lack of experience and knowledge, unless they have been given supervision or instruction concerning use of the appliance by a person responsible for their safety. Children should be supervised to ensure that they do not play with the appliance.

For additional copies of the Installation, Operation and Service Manual, please contact Roberts-Gordon Europe Limited.

1.1 Manpower Requirements

To prevent personal injury and damage to the heater, two persons will be required for installation.

1.2 Safety Labels and Their Placement

Product safety signs or labels should be replaced by the product user when they are no longer legible. Contact Roberts-Gordon Europe Limited for obtaining replacement signs or labels. *See Page 2, Figure 1 through Page 3, Figure 2*.

Figure 1: Side and Back Panel Label Placement

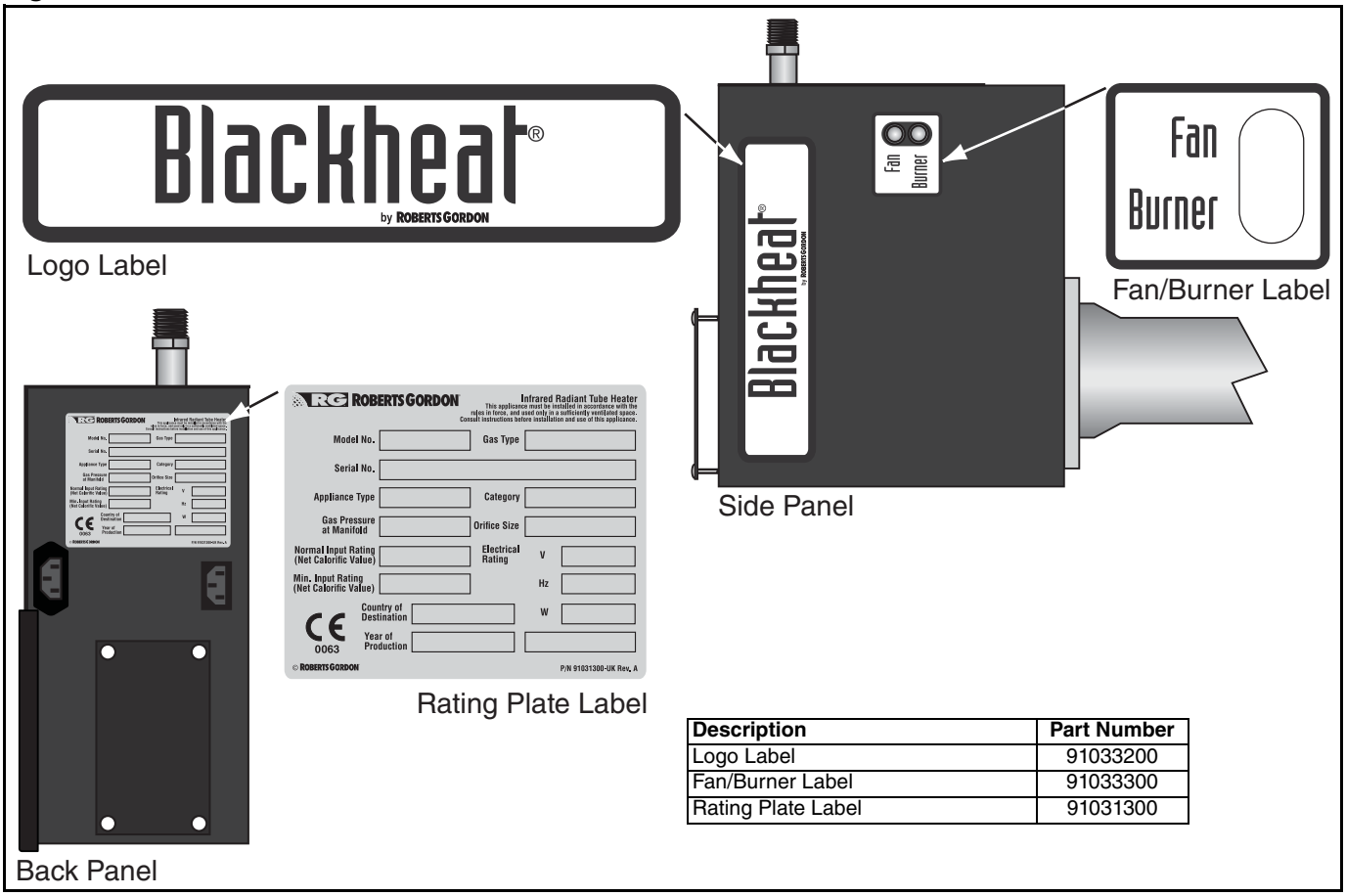

Description	Part Number
Logo Label	91033200
Fan/Burner Label	91033300
Rating Plate Label	91031300

Figure 2: Top Panel Label Placement

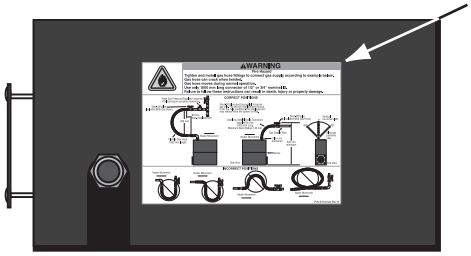

Top Panel

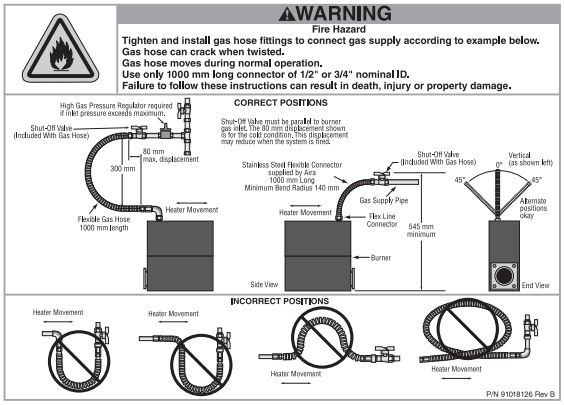

Gas Connection Label

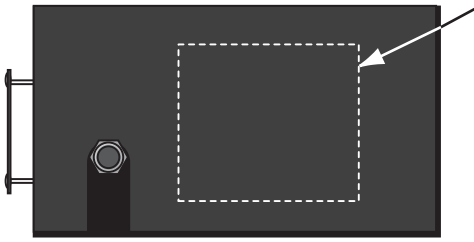

Top Panel - Inside Door

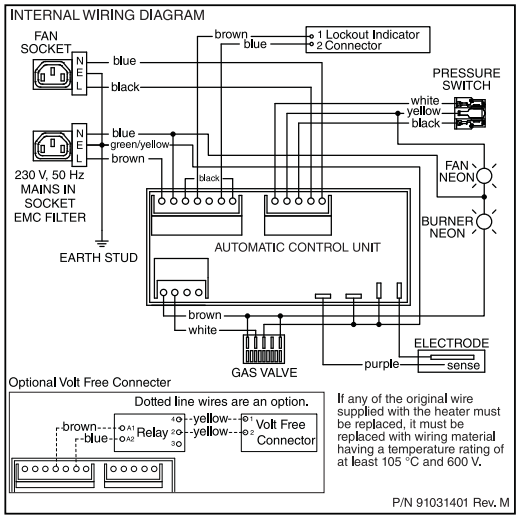

Internal Wiring Label

Description	Part Number
Gas Connection Label	91018126
Internal Wiring Label	91031401

SECTION 2: INSTALLER RESPONSIBILITY

- To install the heater, as well as the gas and electrical supplies, in accordance with applicable specifications and codes. Roberts-Gordon Europe Limited recommends the installer contact a local Building Inspector or Fire
  Marshal for guidance.
- To use the information given in a layout drawing and in the manual together with the cited codes and regulations to perform the installation.
- To install the heater in accordance with the clearances to combustibles.
- To furnish all needed materials not furnished as standard equipment.
- To plan location of supports.
- To provide access to burners for servicing on all sides, for burner removal.
- To provide the owner with a copy of this installation, operation and service manual.
- To never use heater as support for a ladder or other access equipment and never hang or suspend anything from heater.
- To ensure there is adequate air circulation around the heater and to supply air for combustion, ventilation and distribution in accordance with local codes.
- To safely and adequately install heater using materials with a minimal working load of 33 kg.
- To ensure the heater is placed in an approved application.

2.1 Low Level User Instructions

In all situations, clearances to combustibles must be maintained. Signs should be posted in storage areas to specify the maximum stacking height of items placed below heater to maintain required clearances to combustibles. Minimum clearances must be maintained from vehicles parked below the heater. Caution should be used when running the system near combustible materials such as wood, paper, rubber, etc. Consideration should be given to partitions, storage racks, hoists, building construction, etc.

A laminated wall tag is available for the heater as a permanent reminder of the safety instructions and the importance of the required clearances to combustibles. Please contact Roberts-Gordon Europe Limited or your ROBERTS GORDON® independent distributor to obtain the wall tag. Affix the tag by peeling off the backing of the adhesive strips on the rear surface and position the tag on a wall near the heater (e.g. thermostat or ROBERTS GORDON® Controller).

A copy of the wall tag (P/N 91037912) is illustrated on the back cover. This copy of the wall tag can be affixed on the wall near the heater. Know your model number and installed configuration. Model number and installed configuration are found on the burner and in the Installation, Operation and Service Manual. Write the largest clearance dimensions with permanent ink according to your model number and configuration in the open spaces on the tag.

2.2 Corrosive Chemicals

⚠ CAUTION

Product Damage Hazard

Do not use heater in area containing corrosive chemicals.

Refer to appropriate Material Safety Data Sheets (MSDS).

Failure to follow these instructions can result in product damage.

Roberts-Gordon Europe Limited cannot be responsible for ensuring that all appropriate safety measures are undertaken prior to installation; this is entirely the responsibility of the installer. It is essential that the contractor, the sub-contractor, or the owner identifies the presence of combustible materials, corrosive chemicals or halogenated hydrocarbons* anywhere in the premises.

** **Halogenated Hydrocarbons** are a family of chemical compounds characterized by the presence of halogen elements (fluorine, chlorine, bromine, etc.). These compounds are frequently used in refrigerants, cleaning agents, solvents, etc. If these compounds enter the air supply of the burner, the lifespan of the heater components will be greatly reduced. An outside air supply must be provided to the burners whenever the presence of these compounds is suspected. Warranty will be invalid if the heater is exposed to halogenated hydrocarbons.*

2.3 National Standards and Applicable Codes

All appliances must be installed in accordance with the latest revision of the applicable standards and national codes. This refers also to the electric, gas and venting installation. Note: Additional standards for installations in public garages, aircraft hangars, etc. may be applicable.

SECTION 3: CLEARANCES TO COMBUSTIBLES

⚠WARNING

Fire Hazard

Keep all flammable objects, liquids and vapors the minimum required clearances to combustibles away from heater.

Some objects will catch fire or explode when placed close to heater.

Failure to follow these instructions can result in death, injury or property damage.

3.1 Required Clearances to Combustibles

Clearances are the required distances that combustible objects must be away from the heater to prevent fire hazards. Caution should be used when running the system near combustibles. Combustibles are materials, which may catch on fire and include common items such as wood, paper, rubber, fabric, etc. **Maintain clearances to combustibles at all times for safety.**

Clearances for all heater models are located *on Page 6, Figure 3 through Page 9, Figure 17* in this manual. Check the clearances on each burner for the model heater being installed to make sure the product is suitable for your application and the clearances are maintained. Read and follow the safety guidelines below:

- Keep petrol or other combustible materials including flammable objects, liquids, dust or vapours away from this heater or any other appliance.
- Do not spray aerosols in the vicinity of this appliance.
- The stated clearances to combustibles represents a surface temperature of 50° C (90° F) above room temperature. Building materials with a low heat tolerance (such as plastics, vinyl siding, canvas, tri-ply, etc) may be subject to degradation at lower temperatures. It is the installer's responsibility to assure that adjacent materials are protected from degradation.
- Maintain clearances from heat sensitive equipment and workstations.
- Maintain clearances from vehicles parked below the heater.
- Maintain clearances from swinging and overhead doors, overhead cranes, vehicle lifts, partitions, storage racks, hoists, building construction, etc.
- In locations used for the storage of combustible materials, signs must be posted to specify the maximum permissible stacking height to maintain required clearances from the heater to the combustibles. Signs must be posted adjacent to the heater thermostat. In the absence of a thermostat, signs must be posted in a conspicuous location.
- Consult local Building Inspector, Fire Insurance Carrier or other authorities for approval of proposed installation when there is a possibility of exposure to combustible airborne materials or vapours.
- Hang heater in accordance to the minimum suspension requirements on *Page 72, Section 18.7 through Section 18.9*.
- If the radiant tubes must pass through the building structure, be sure that adequate sleeving and fire stop is installed to prevent scorching and/or fire hazard.

3.2 Clearance Data - Linear and Double Linear

NOTE:
1. All dimensions are from the surfaces of all tubes, couplings, tees, elbows and crosses.
2. Clearances B, C and D can be reduced by 50% after 7500 mm of tubing downstream from the burner.
3. All measurements are in millimeters.

FIGURE 3: LINEAR & DOUBLE LINEAR, HORIZONTAL MOUNTS

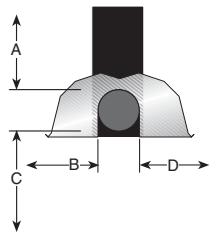

Model	BH15ST BH30DL	BH20ST BH40DL	BH25ST/EF BH50DL/EF	BH30ST/EF BH60DL/EF	BH35ST/EF BH70DL/EF	BH40ST/EF	BH45ST/EF	BH50ST/EF & BH55ST*
A	150	150	150	150	150	150	200	200
B	890	970	970	1020	1170	1220	1280	1330
C	1570	1650	1650	1780	1930	1970	2010	2080
D	890	970	970	1020	1170	1220	1280	1330

FIGURE 4: LINEAR & DOUBLE LINEAR, ONE SIDE REFLECTOR

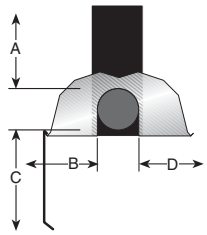

Model	BH15ST BH30DL	BH20ST BH40DL	BH25ST/EF BH50DL/EF	BH30ST/EF BH60DL/EF	BH35ST/EF BH70DL/EF	BH40ST/EF	BH45ST/EF	BH50ST/EF & BH55ST*
A	150	150	150	150	150	150	200	200
B	230	230	230	230	230	230	230	230
C	1580	1760	1760	1930	2090	2130	2160	2240
D	1200	1380	1380	1500	1660	1710	1760	1860

FIGURE 5: LINEAR & DOUBLE LINEAR, TWO SIDE REFLECTORS

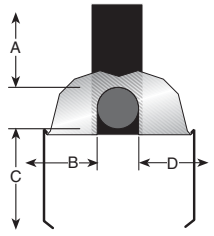

Model	BH15ST BH30DL	BH20ST BH40DL	BH25ST/EF BH50DL/EF	BH30ST/EF BH60DL/EF	BH35ST/EF BH70DL/EF	BH40ST/EF	BH45ST/EF	BH50ST/EF & BH55ST*
A	150	150	150	150	150	150	200	200
B	590	640	640	690	820	860	890	1020
C	1660	1810	1810	1960	2110	2160	2210	2320
D	590	640	640	690	820	860	890	1020

FIGURE 6: LINEAR & DOUBLE LINEAR, 45° MOUNT

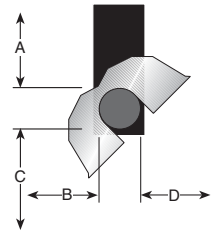

Model	BH15ST BH30DL	BH20ST BH40DL	BH25ST/EF BH50DL/EF	BH30ST/EF BH60DL/EF	BH35ST/EF BH70DL/EF	BH40ST/EF	BH45ST/EF	BH50ST/EF & BH55ST*
A	200	200	200	250	250	275	300	300
B	200	200	200	200	200	200	200	200
C	1500	1660	1660	1860	1960	2030	2110	2160
D	1370	1520	1520	1630	1750	1820	1880	2000

* BH55ST only available in multiburner.

NOTE:
1. All dimensions are from the surfaces of all tubes, couplings, tees, elbows and crosses.
2. Clearances B, C and D can be reduced by 50% after 7500 mm of tubing downstream from the burner.
3. All measurements are in millimeters.

FIGURE 7: LINEAR & DOUBLE LINEAR, 2 FOOT DECO GRILLE

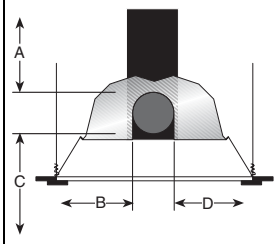

Model	BH15ST BH30DL	BH20ST BH40DL	BH25ST/EF BH50DL/EF	BH30ST/EF BH60DL/EF	BH35ST/EF BH70DL/EF	BH40ST/EF	BH45ST/EF	BH50ST/EF & BH55ST*
A	150	150	150	150	150	150	200	200
B	890	970	970	1020	1170	1220	1280	1330
C	1570	1650	1650	1780	1930	1970	2010	2080
D	890	970	970	1020	1170	1220	1280	1330

FIGURE 8: LINEAR & DOUBLE LINEAR, PROTECTIVE GRILLE

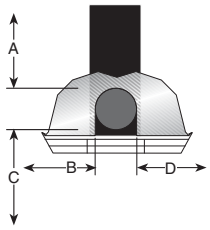

Model	BH15ST BH30DL	BH20ST BH40DL	BH25ST/EF BH50DL/EF	BH30ST/EF BH60DL/EF	BH35ST/EF BH70DL/EF	BH40ST/EF	BH45ST/EF	BH50ST/EF & BH55ST*
A	150	150	150	150	150	150	200	200
B	890	970	970	1020	1170	1220	1280	1330
C	1570	1650	1650	1780	1930	1970	2010	2080
D	890	970	970	1020	1170	1220	1280	1330

FIGURE 9: UNDERSHIELD **

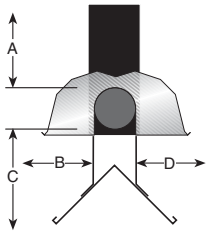

Model	BH15ST BH30DL	BH20ST BH40DL	BH25ST/EF BH50DL/EF	BH30ST/EF BH60DL/EF	BH35ST/EF BH70DL/EF	BH40ST/EF	BH45ST/EF	BH50ST/EF & BH55ST*
A	150	150	150	150	150	150	-	-
B	990	1020	1270	1270	1370	1400	-	-
C	840	965	1120	1120	1220	1270	-	-
D	990	1020	1270	1270	1370	1400	-	-

** When installed in the first 6 m - Not for use on EF models.

FIGURE 10: LINEAR & DOUBLE LINEAR, VENTING

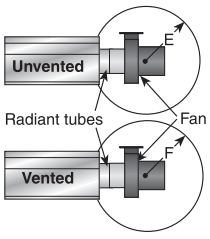

Model	BH15ST BH30DL	BH20ST BH40DL	BH25ST/EF BH50DL/EF	BH30ST/EF BH60DL/EF	BH35ST/EF BH70DL/EF	BH40ST/EF	BH45ST/EF	BH50ST/EF & BH55ST*
E	1000	1000	1000	1000	1000	1000	1000	1000
F	500	500	500	500	500	500	500	500

* BH55ST only available in multiburner.

3.3 Clearance Data -U Tube

NOTE:
1. All dimensions are from the surfaces of all tubes, couplings, tees, elbows and crosses.
2. Clearances B, C and D can be reduced by 50% after 7500 mm of tubing downstream from the burner.
3. All measurements are in millimeters.
4. Add 60 mm clearance to uncovered U-tube.

FIGURE 11: U-TUBE, HORIZONTAL MOUNT

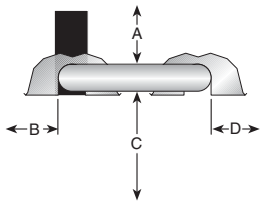

Model	BH15UT	BH20UT	BH25UT/EF	BH30UT/EF	BH35UT/EF	BH40UT/EF	BH45UT/EF	BH50UT/EF
A	150	150	150	150	150	150	200	200
B	890	970	970	1020	1170	1220	1270	1380
C	1580	1730	1730	1910	1980	2050	2110	2210
D	760	940	940	1000	1090	1150	1200	1300

FIGURE 12: U-TUBE, ONE SIDE REFLECTOR

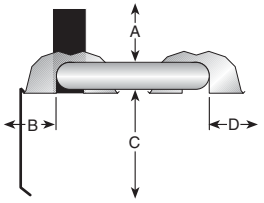

Model	BH15UT	BH20UT	BH25UT/EF	BH30UT/EF	BH35UT/EF	BH40UT/EF	BH45UT/EF	BH50UT/EF
A	150	150	150	150	150	150	200	200
B	230	230	230	230	230	230	230	230
C	1580	1760	1760	1930	2090	2130	2160	2240
D	1200	1380	1380	1500	1660	1710	1760	1860

FIGURE 13: U-TUBE, TWO SIDE REFLECTORS

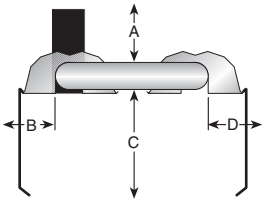

Model	BH15UT	BH20UT	BH25UT/EF	BH30UT/EF	BH35UT/EF	BH40UT/EF	BH45UT/EF	BH50UT/EF
A	150	150	150	150	150	150	200	200
B	590	640	640	690	820	860	890	1020
C	1660	1810	1810	1960	2110	2160	2210	2320
D	590	640	640	690	820	860	890	1020

FIGURE 14: U-TUBE, FULL 45° MOUNT

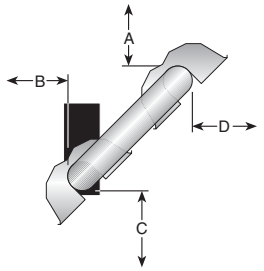

Model	BH15UT	BH20UT	BH25UT/EF	BH30UT/EF	BH35UT/EF	BH40UT/EF	BH45UT/EF	BH50UT/EF
A	200	200	200	200	200	200	200	200
B	200	200	200	200	200	200	200	200
C	1500	1650	1650	1860	1960	2040	2110	2160
D	1070	1170	1170	1320	1550	1620	1680	1780

NOTE:
1. All dimensions are from the surfaces of all tubes, couplings, tees, elbows and crosses.
2. Clearances B, C and D can be reduced by 50% after 7500 mm of tubing downstream from the burner.
3. All measurements are in millimeters.
4. Add 60 mm clearance to uncovered U-tube.

FIGURE 15: U-TUBE, OPPOSITE 45° TILT

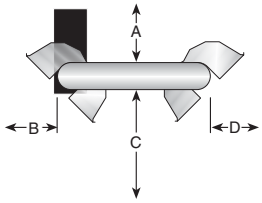

Model	BH15UT	BH20UT	BH25UT/EF	BH30UT/EF	BH35UT/EF	BH40UT/EF	BH45UT/EF	BH50UT/EF
A	200	200	200	250	250	275	300	300
B	1370	1530	1530	1630	1780	1830	1880	1930
C	1500	1650	1650	1860	1960	2040	2110	2160
D	560	560	560	560	560	560	560	560

FIGURE 16: U-TUBE, PROTECTIVE GRILLE

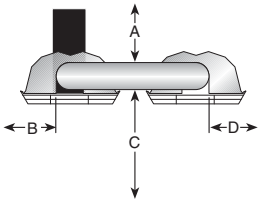

Model	BH15UT	BH20UT	BH25UT/EF	BH30UT/EF	BH35UT/EF	BH40UT/EF	BH45UT/EF	BH50UT/EF
A	150	150	150	150	150	150	200	200
B	890	970	970	1020	1170	1220	1270	1380
C	1580	1730	1730	1910	1980	2050	2110	2210
D	760	940	940	1000	1090	1150	1200	1300

FIGURE 17: U-TUBE, VENTING

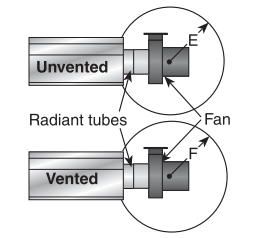

Model	BH15UT	BH20UT	BH25UT/EF	BH30UT/EF	BH35UT/EF	BH40UT/EF	BH45UT/EF	BH50UT/EF
E	1000	1000	1000	1000	1000	1000	1000	1000
F	500	500	500	500	500	500	500	500

SECTION 4: MAJOR COMPONENT DESCRIPTIONS

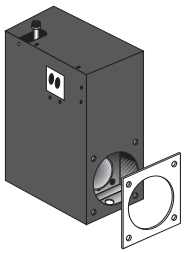

Burner (shown with Tube Gasket)

Must be installed with the flame observation window facing down.

Reflector (Aluminium or Stainless Steel)

Alternate overlap as shown on overview. Minimum overlap is 160 mm.

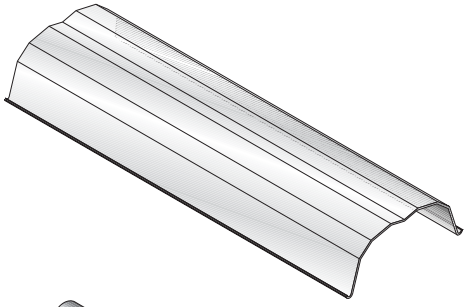

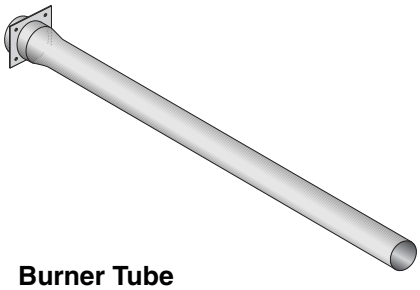

Burner Tube

Supplied in 3,000 mm lengths. Burner tube is always the first tube after the burner.

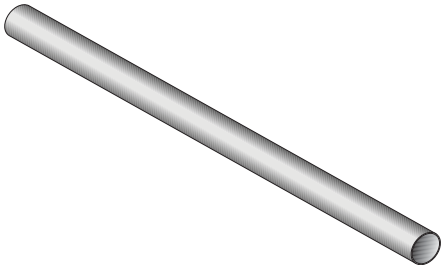

Tube

Heat treated aluminised tube supplied in 3,000 mm lengths.

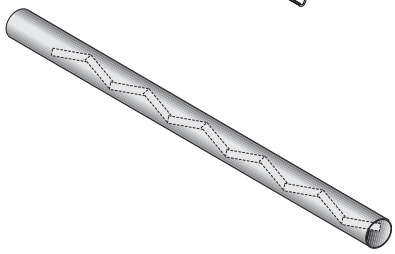

Fan Tube with Internal Swirler

Supplied in 3,000 mm lengths. Fan tube is always the last tube on the heater where the fan is attached.

The swirler is welded to the inside of the tube end.

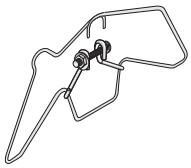

Tube and Reflector Hanger with Clamp Package

Position this hanger no more than 100 mm away from the burner assembly.

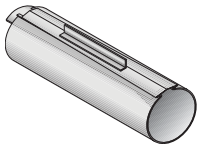

Coupling Assembly with Lock

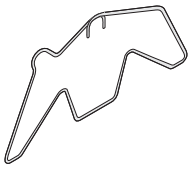

Tube and Reflector Hanger

Suspend system from these hangers.

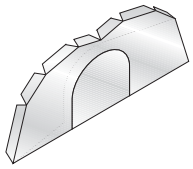

Reflector End Cap

Punch out center section to accommodate tube.

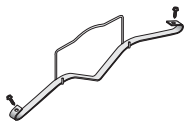

Reflector Support Strap, Wire Form & #8 x 3/4 (3.9 x 19mm) Screw

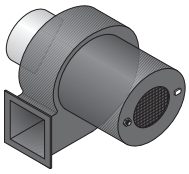

Fan Assembly (Includes Flange)

Fan Assembly is attached to the last section of heat exchanger tubing (Fan Tube).

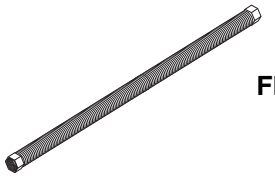

Flex Gas Line

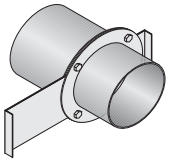

Damper Flange Assembly

For use on Multiburner Systems.

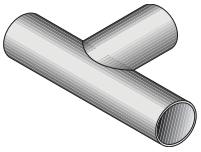

Tee Assembly

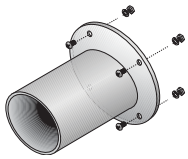

Fan Flange Assembly and Screws

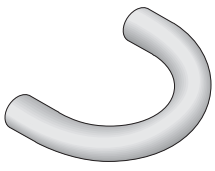

U-Tube

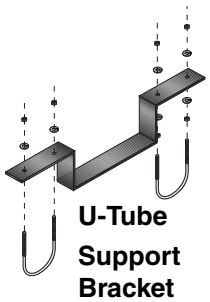

U-Tube Support Bracket

S-hook

Height Adjuster

Spring Hook

Bow Shackle

SECTION 5: GENERAL SUSPENSION DETAILS

⚠WARNING

Severe Injury Hazard

Secure burner to burner tube with bolts and lockwashers.

Hang heater with materials with a minimum working load of 75 lbs (33 kg).

Failure to follow these instructions can result in death, injury or property damage.

⚠WARNING

Cut/Pinch Hazard

Wear protective gear during installation, operation and service.

Edges are sharp.

Failure to follow these instructions can result in injury.

To ensure your safety, and comply with the terms of the warranty, all units must be installed in accordance with these instructions.

The gas or the electrical supply lines must not be used to support the heater.

Do not locate the gas or electric supply lines directly over the path of the flue products from the heater.

The heater must be installed in a location that it is readily accessible for servicing.

The heater must be installed in accordance with clearances to combustibles as indicated in this manual.

The minimum and maximum gas inlet pressures must be maintained as indicated on the rating plate. Typical installation configurations are shown *on Page 12, Figure 18*.

Suspension chain is not supplied as standard equipment.

Note: Some models will receive S-hooks (P/N 91907302) or spring hooks (P/N 91903300), rather than bow shackles.

Figure 18: Critical Hanger Placement

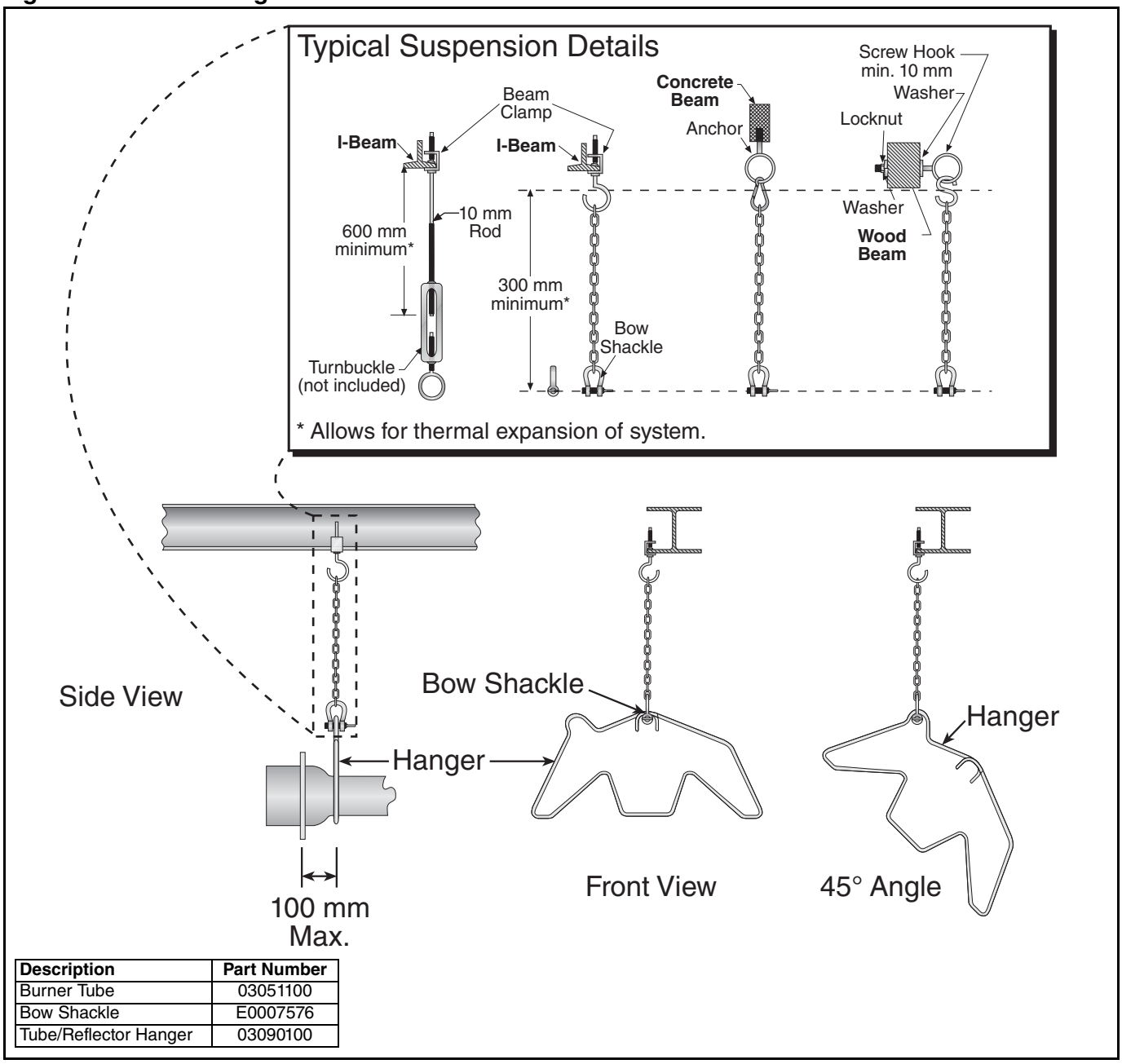

Description	Part Number
Burner Tube	03051100
Bow Shackle	E0007576
Tube/Reflector Hanger	03090100

For suspension angles other than shown, additional chain supports may be required.

SECTION 6: LINEAR & DOUBLE LINEAR HEATER INSTALLATION

⚠ WARNING

Cut/Pinch Hazard

Wear protective gear during installation, operation and service.

Edges are sharp.

Failure to follow these instructions can result in injury.

The figures in this section provide a general overview of component placement in a Linear and Double Linear system. The location of some components such as supports and couplings is crucial for proper installation. Assemble the heater components as shown *on Page 14, Figure 19*.

For optional reflector configurations for linear heaters *see Page 6, Figure 3 through Page 7, Figure 10*. Install appropriate suspension hardware, beam clamps, chain or rod at predetermined locations. Adjustments of chain length will provide uniform pitch.

If any step is unclear, please contact Roberts-Gordon Europe Limited at +44 (0)121 506 7700.

6.1 Linear Standard Parts List

Part No.	Description	BH15ST	BH20ST	BH25ST BH25ST/EF	BH30ST BH30ST/EF	BH35ST BH35ST/EF	BH40ST BH40ST/EF	BH45ST BH45ST/EF	BH50ST BH50ST/EF	BH55ST
072XXXXX	Burner Assembly (Input and Fuel Varies)	1	1	1	1	1	1	1	1	1
07260001	Fan Package XP 1	1	1	1	1	-	-	-	-	-
07260002	Fan Package XP2	-	-	-	-	1	1	1	-	-
07260003	Fan Package XP 3	-	-	-	-	-	-	-	1	-
07260004	Linear Package	1	1	1	1	1	1	1	1	1
03051100	Burner Tube, 100 mm x 3048 mm	1	1	1	1	1	1	1	1	1
91409408	Tube, 100 mm x 3048 mm	-	1	1	2	2	2	3	3	4
S5127W	Fan Tube, 100 mm x 3048 mm, with 3048 mm Swirler	-	1	1	1	1	1	1	1	1
S5134W	Fan Tube, 100 mm x 3048 mm, with 2134 mm Swirler	1	-	-	-	-	-	-	-	-
01329600	Standard Coupling Assembly	1	2	2	3	3	3	4	4	5
01329700	Coupling Lock	1	2	2	3	3	3	4	4	5
02750303	Reflector, Aluminium, 2439 mm	3	4	4	6	6	6	7	7	8
027503SS	Reflector, Stainless Steel, 2439 mm (Optional)*	3	4	4	6	6	6	7	7	8
02750800	Reflector End Cap, Aluminium	2	2	2	2	2	2	2	2	2
027508SH	Reflector End Cap, Stainless (Optional)*	2	2	2	2	2	2	2	2	2
03090100	Tube and Reflector Hanger	3	4	4	5	5	5	6	6	7
01318901	Tube Clamp Package (including Nut, Washer & Bolt)	1	1	1	1	1	1	1	1	1
91908004	Wire Form	2	3	3	5	5	5	6	6	7
94320812	Screw #8 x 3/4 (3.9 mm x 19 mm), (goes with 03050000)	4	6	6	10	10	10	12	12	14
03050000	Reflector Support Strap	2	3	3	5	5	5	6	6	7
E0007576	Bow Shackle**	3	4	4	5	5	5	6	6	7
91107720	U-Clip Package (20 Pieces)	1	1	1	1	1	1	1	1	1
S7199K	Damper Flange Assembly (For use on Multiburner Systems)	1 Per Heater								

** PVC coating must be removed prior to installation.*

*** Some models may receive S-hooks (P/N 91907302) or spring hooks (P/N 91903300), rather than bow shackles.*

Figure 19: Linear General Assembly Overview

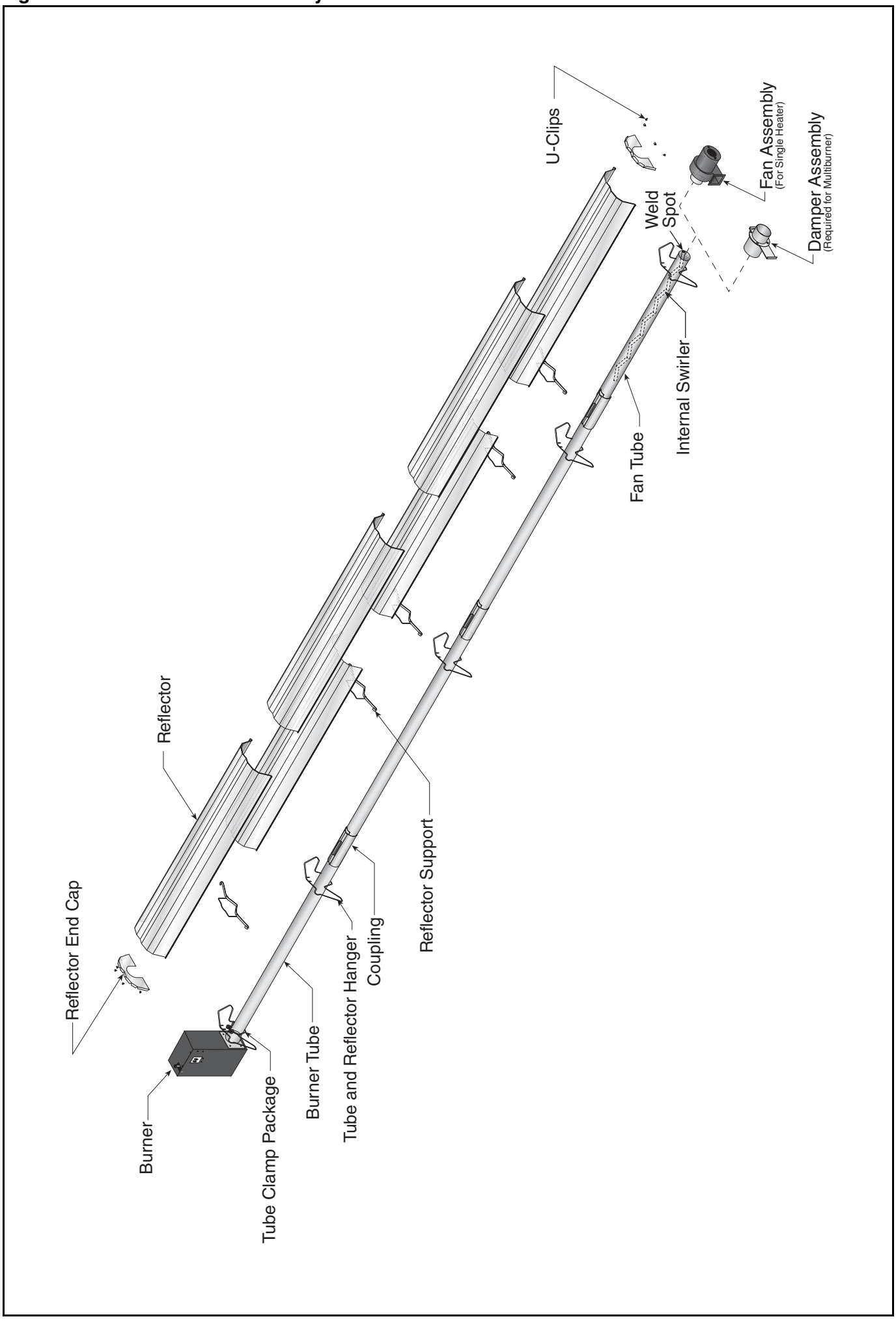

Figure 20: Linear Layout Overview

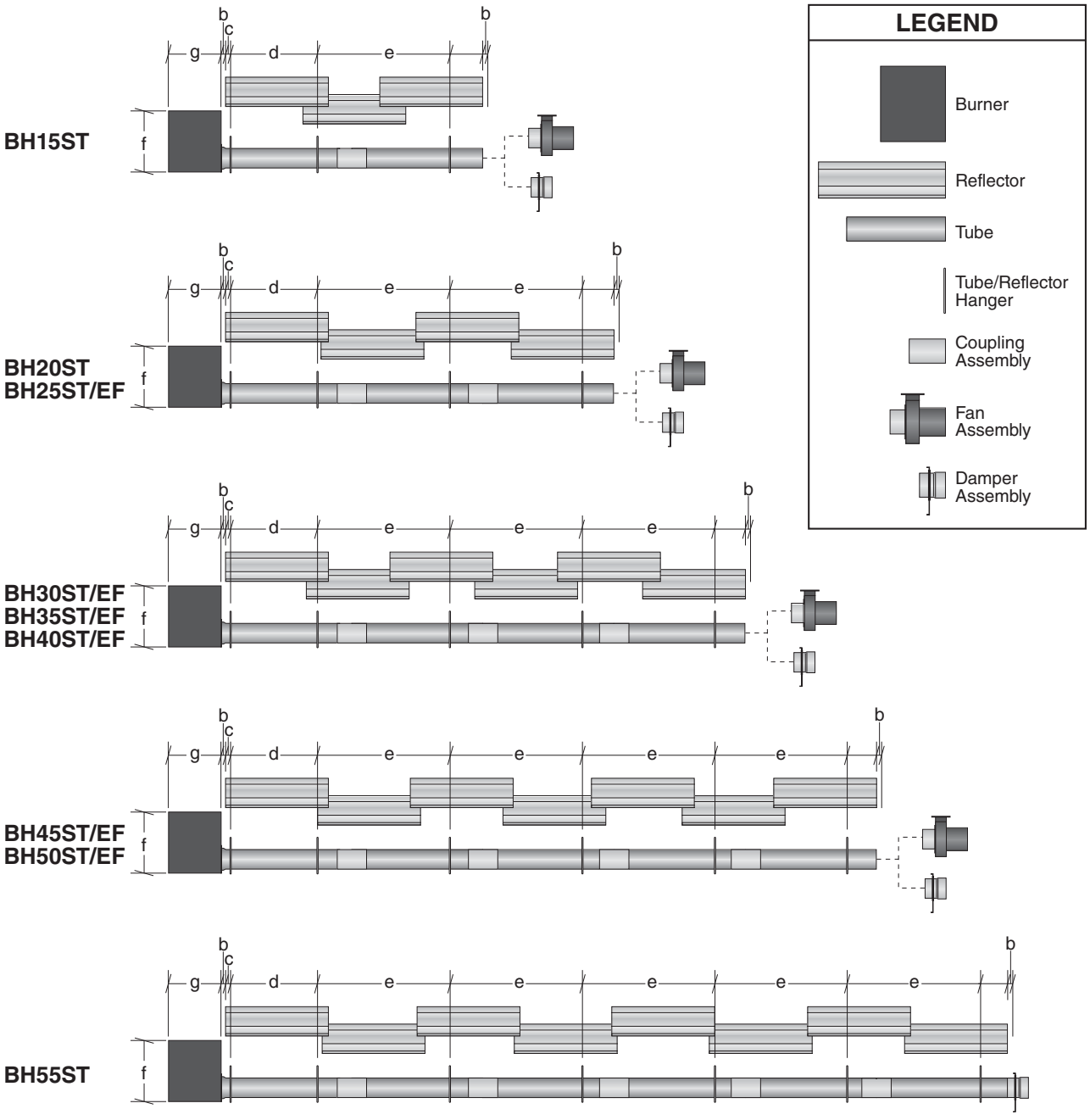

a = reflector width (not shown) - 365 mm
b = end cap to burner/fan - 50 mm
c = end cap to hanger - 50 mm
d = distance first hanger - 2290 mm
e = distance typical between hangers - 3050 mm
f = burner height - 366 mm
g = burner length - 291 mm

Model	BH15ST	BH20ST	BH25ST/EF	BH30ST/EF	BH35ST/EF	BH40ST/EF	BH45ST/EF	BH50ST/EF	BH55ST
Reflector Overlap (approx.)	700 mm	250 mm	250 mm	530 mm	530 mm	530 mm	330 mm	330 mm	200 mm

6.2 Double Linear Standard Parts List

Part No.	Description	BH30DL	BH40DL	BH50DL BH50DL/EF	BH60DL BH60DL/EF	BH70DL BH70DL/EF
072XXXXX	Burner Assembly (Input and Fuel Varies)	2	2	2	2	2
07260002	Fan Package XP2	1	1	-	-	-
07260003	Fan Package XP 3	-	-	1	1	1
07260004	Linear Package	2	2	2	2	2
03051100	Burner Tube, 100 mm x 3048 mm	2	2	2	2	2
91409408	Tube, 100 mm x 3048 mm	-	2	2	4	4
S5127W	Fan Tube, 100 mm x 3048 mm, with 3048 mm Swirler	-	2	2	2	2
S5134W	Fan Tube, 100 mm x 3048 mm, with 2134 mm Swirler	2	-	-	-	-
01330203	Tee, 100 mm x 100 mm x 100 mm	1	1	1	1	1
01329600	Standard Coupling Assembly	4	6	6	8	8
01329700	Coupling Lock	4	6	6	8	8
02750303	Reflector, Aluminium, 2439 mm	6	8	8	12	12
027503SS	Reflector, Stainless Steel, 2439 mm (Optional)*	6	8	8	12	12
02750800	Reflector End Cap, Aluminium	4	4	4	4	4
027508SH	Reflector End Cap, Stainless (Optional)*	4	4	4	4	4
03090100	Tube and Reflector Hanger	6	8	8	10	10
01318901	Tube Clamp Package (including Nut, Washer & Bolt)	2	2	2	2	2
91908004	Wire Form	4	6	6	10	10
03050000	Reflector Support Strap	4	6	6	10	10
E0007576	Bow Shackle**	6	8	8	10	10
91107720	U-Clip Package (20 Pieces)	2	2	2	2	2
E0007582	Height Adjuster	6	8	8	10	10
94320812	Screw #8 x 3/4 (3.9 mm x 19 mm), (goes with 03050000)	8	12	12	20	20

** PVC coating must be removed prior to installation.*

***Some models may receive S-hooks (P/N 91907302) or spring hooks (P/N 91903300), rather than bow shackles*

Figure 21: Double Linear General Assembly Overview

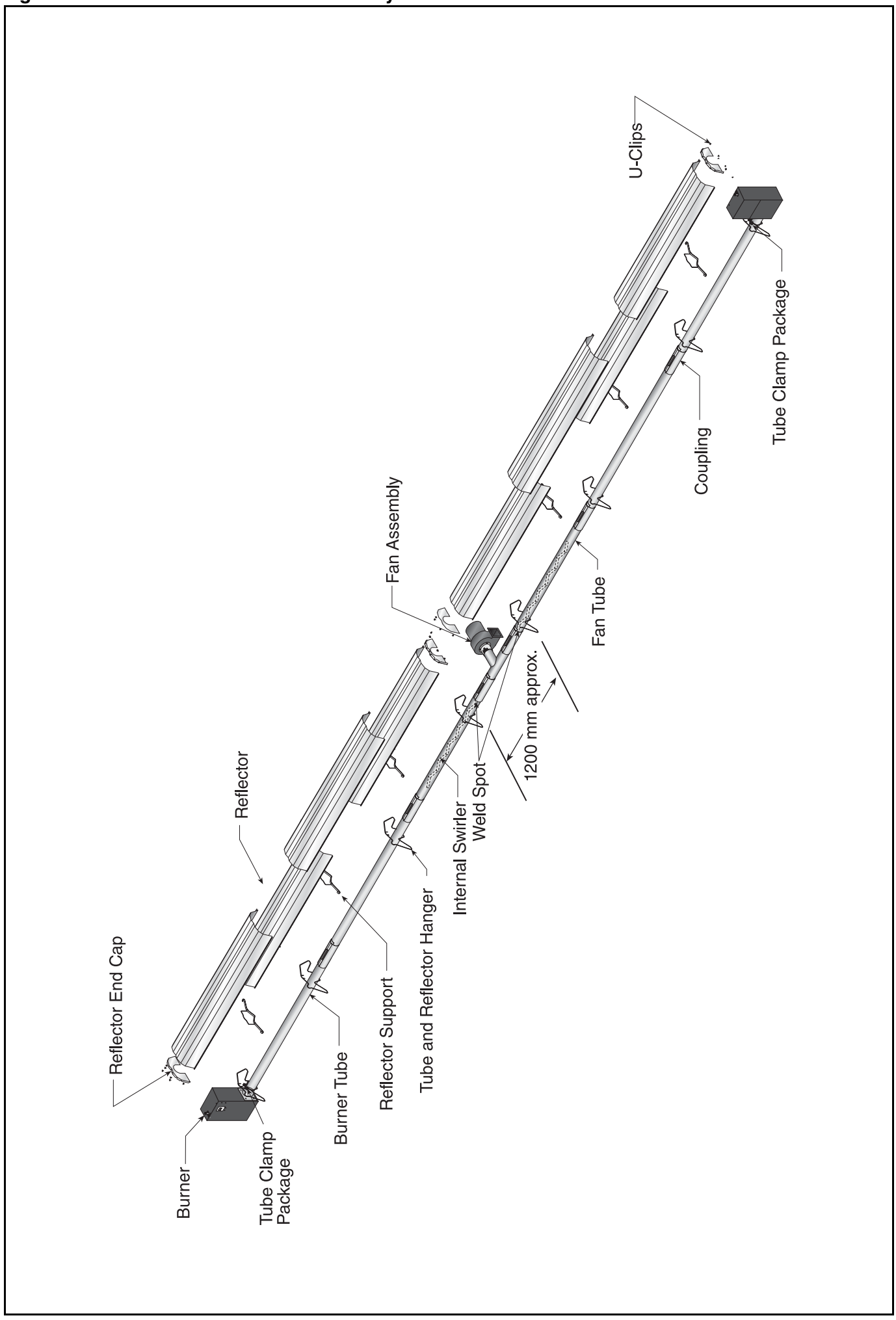

Figure 22: Double Linear Layout Overview

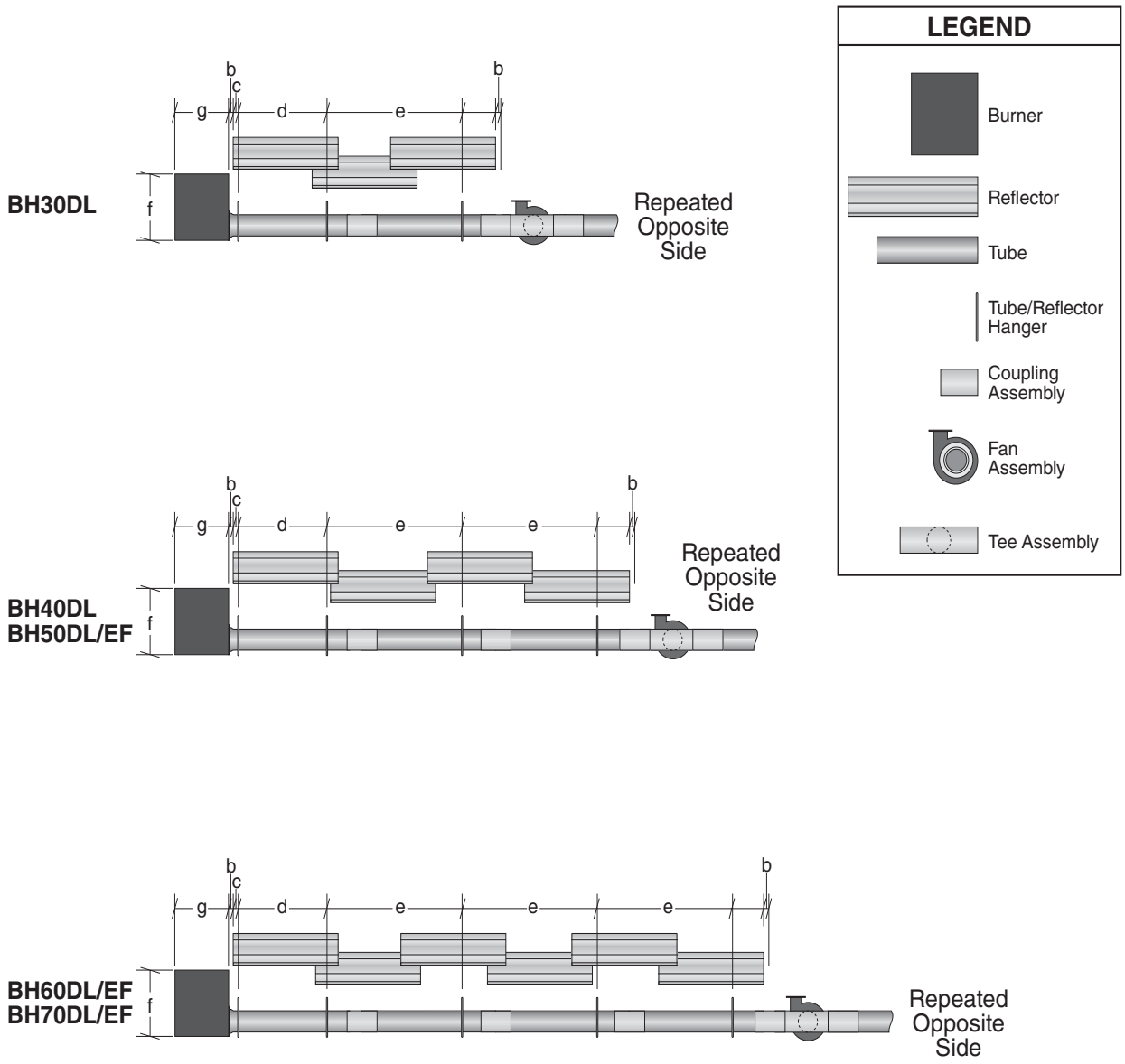

a = reflector width (not shown) - 365 mm
b = end cap to burner/fan - 50 mm
c = end cap to hanger - 50 mm
d = distance first hanger - 2290 mm
e = distance typical between hangers - 3050 mm
f = burner height - 366 mm
g = burner length - 291 mm

Model	BH30DL	BH40DL	BH50DL/EF	BH60DL/EF	BH70DL/EF
Reflector Overlap (approx.)	700 mm	250 mm	250 mm	530 mm	530 mm

Step 6.3 Burner Tube Installation

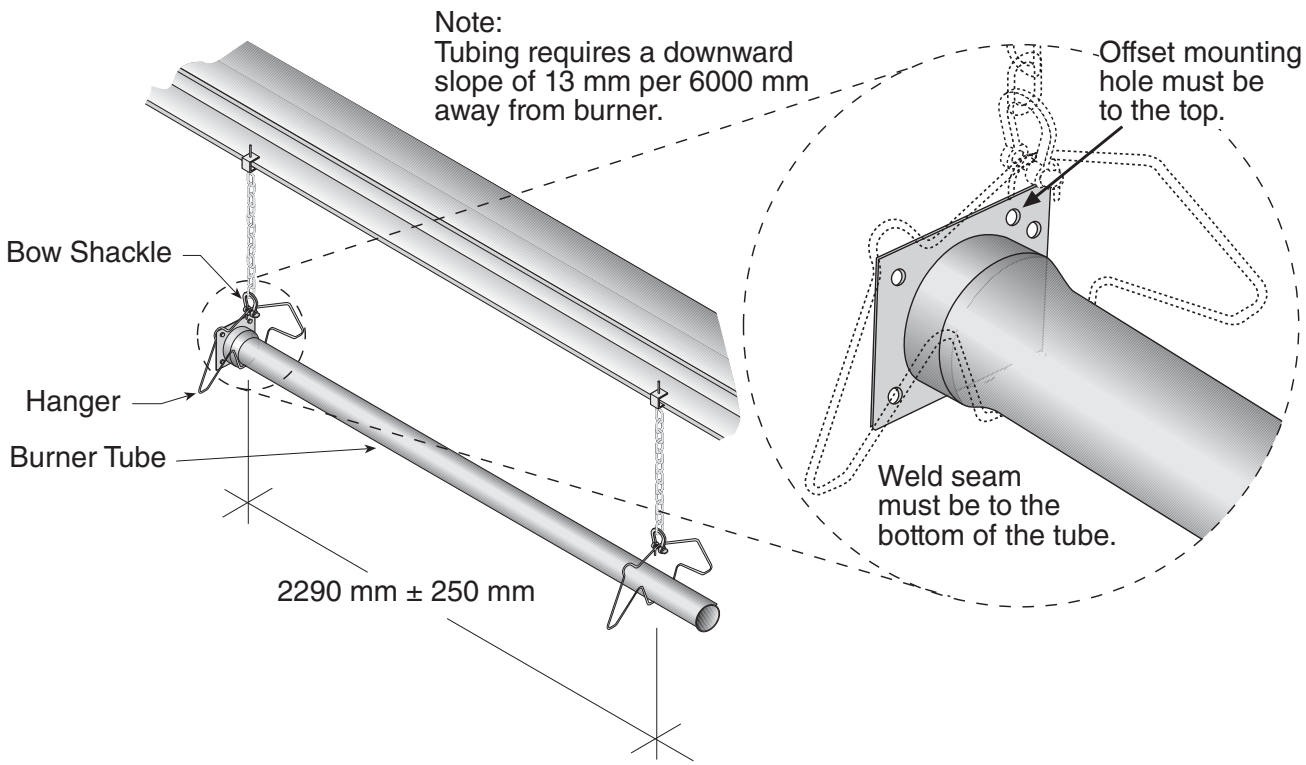

Description	Part Number
Burner Tube	03051100
Bow Shackle	E0007576
Tube/Reflector Hanger	03090100

Step 6.4 Coupling and Tube Assembly

A Close coupling with tab.

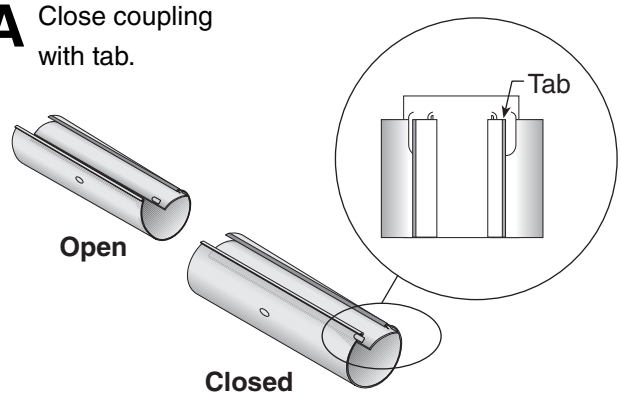

B Start slide bar/coupling lock onto coupling.

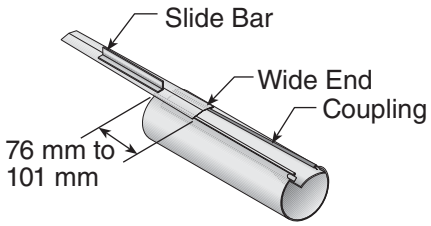

C Insert tubes into coupling.

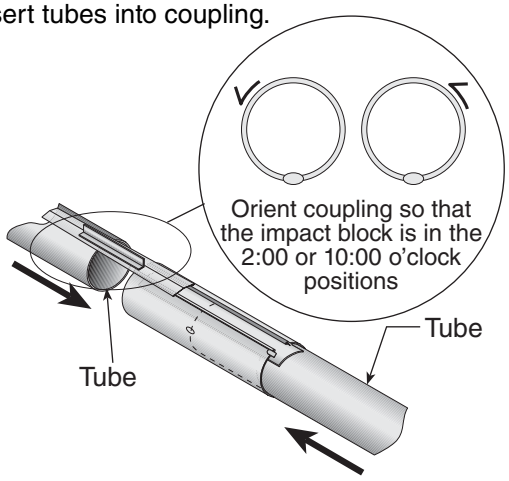

D Tighten coupling to join tubes.

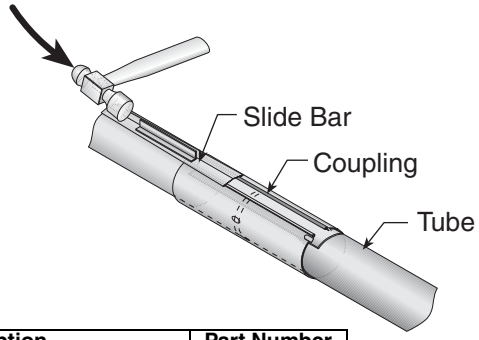

Description	Part Number
Coupling	01329600
Slide Bar/Coupling Lock	01329700
Tube	91409408

Step 6.4.1 Coupling and Tube Assembly (Continued)

Tighten slide bar as shown below.

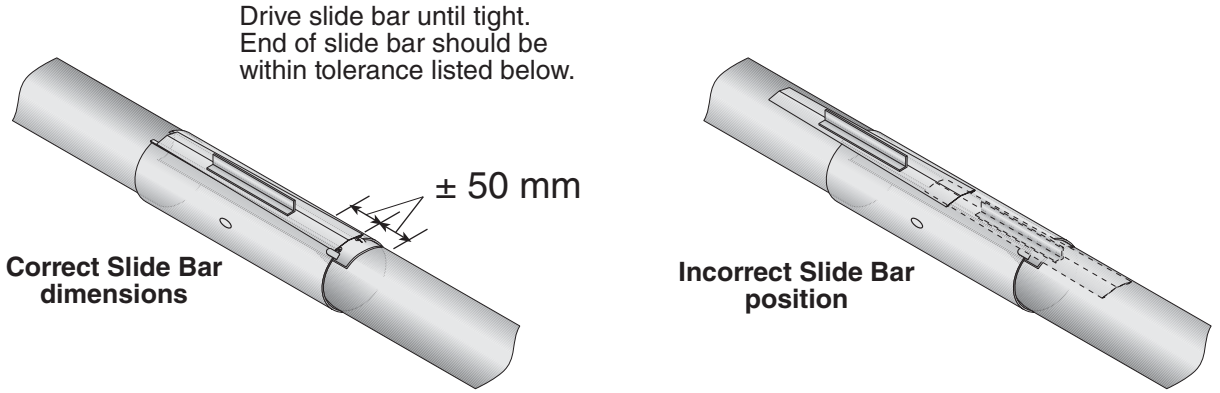

• Repeat *Step 6.4* A - D until all tubes are assembled. *See Page 20, Section 6.4.2* shown below.

Step 6.4.2 Coupling and Tube Assembly (Continued)

Model	Overall Tube Length (mm)	Number of Tubes
BH15ST	6,000	2
BH20ST	9,000	3
BH25ST/EF	9,000	3
BH30ST/EF	12,000	4
BH35ST/EF	12,000	4
BH40ST/EF	12,000	4
BH45ST/EF	15,000	5
BH50ST/EF	15,000	5
BH55ST	18,000	6

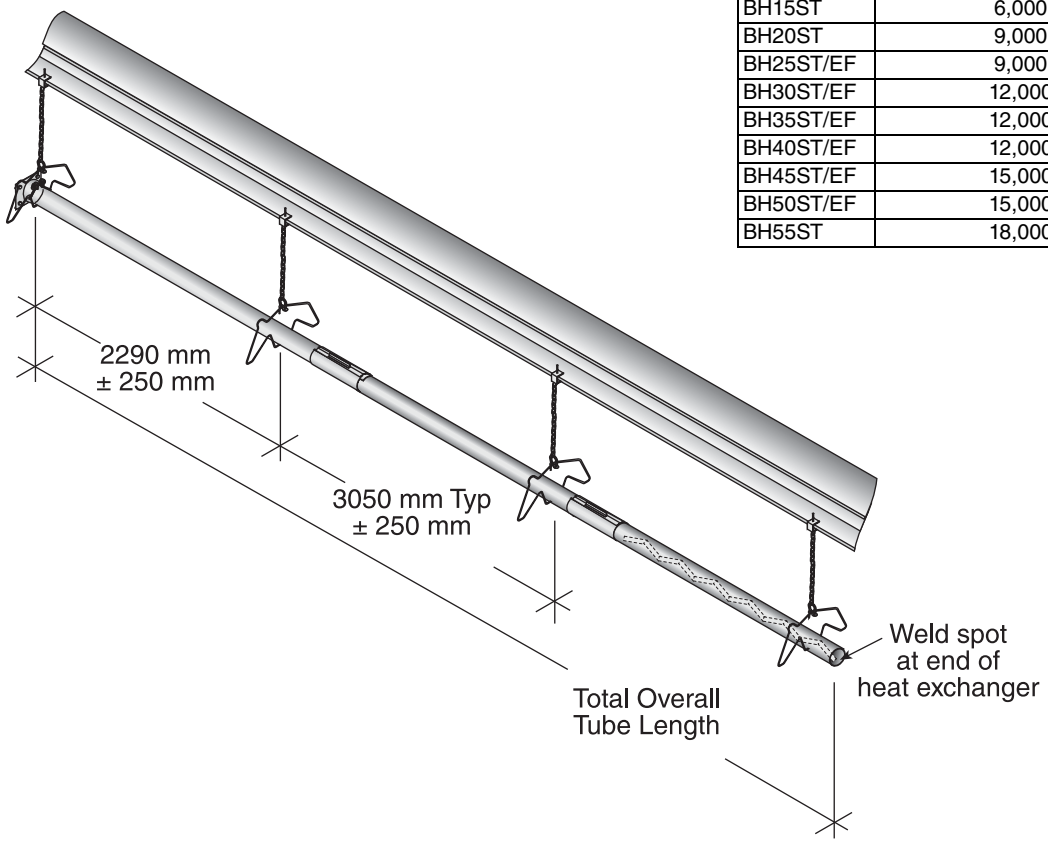

Step 6.5 Tube Clamp Package Installation

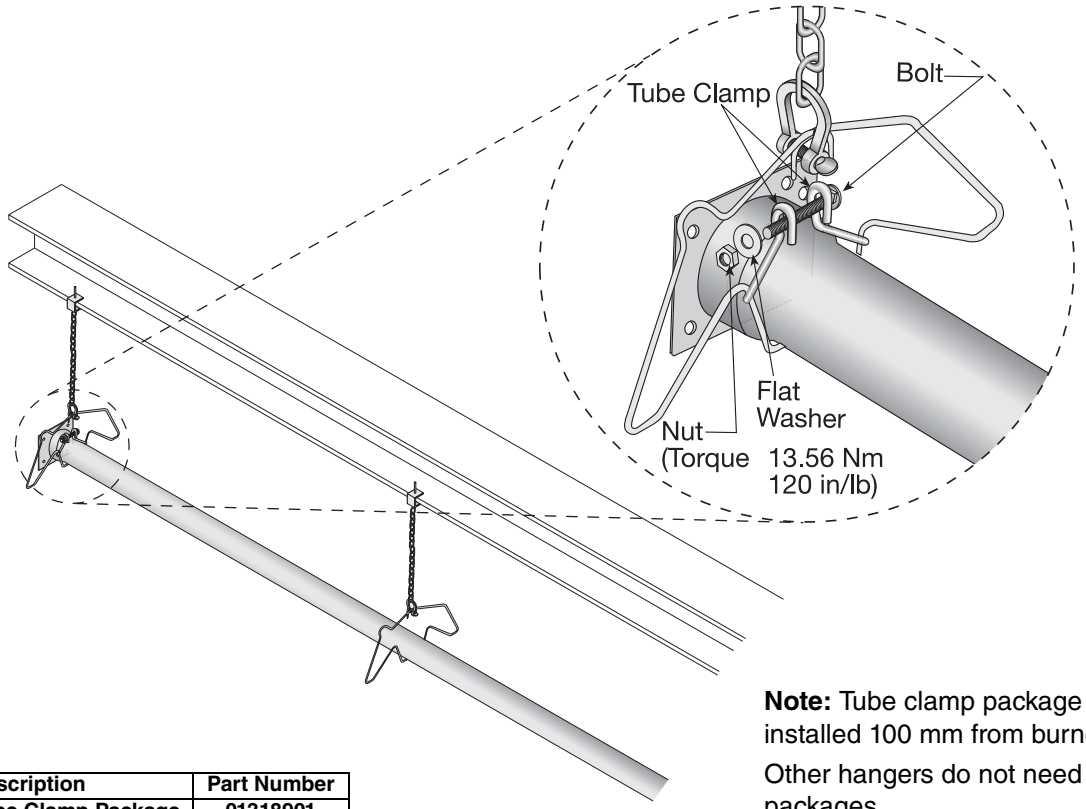

Description	Part Number
Tube Clamp Package	**01318901**
Tube Clamp	01396801
Bolt	97113940
Flat Washer	95211600
Nut	92113900

Note: Tube clamp package should be installed 100 mm from burner tube plate.

Other hangers do not need tube clamp packages.

Step 6.6 Reflector Installation

⚠ WARNING

Fire Hazard

Support reflector with reflector hanger and support strap.

Reflector must not touch tube.

Failure to follow these instructions can result in death, injury or property damage.

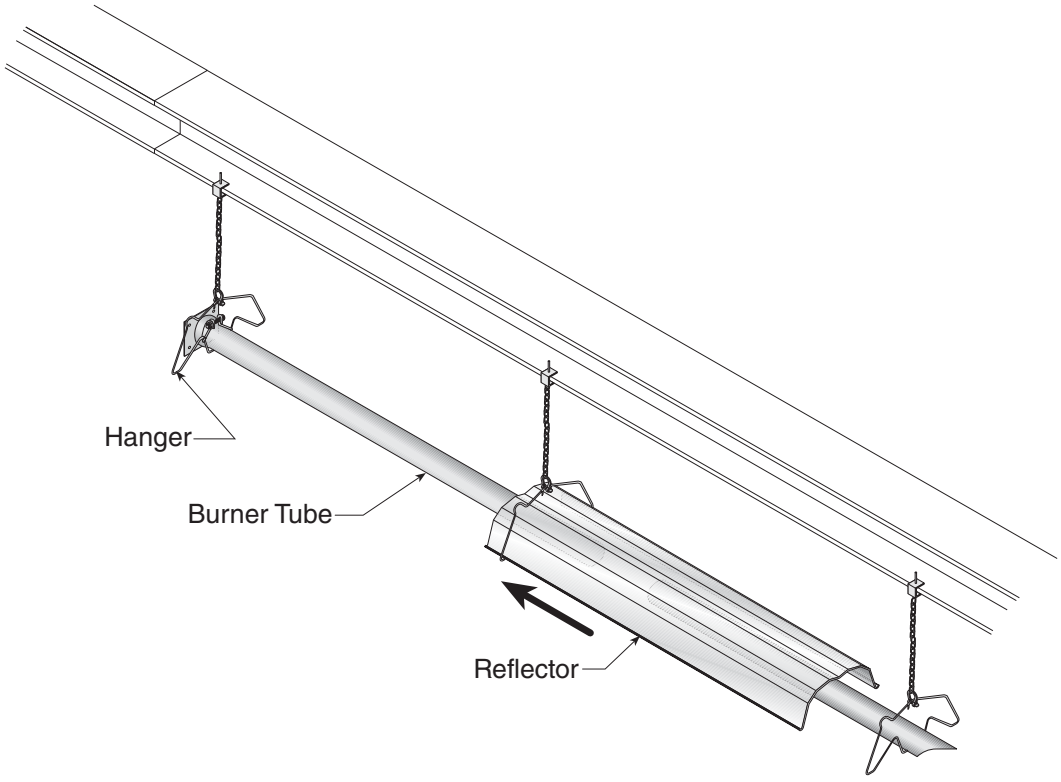

Description	Part Number
Tube/Reflector Hanger	03090100
Burner Tube	03051100
Reflector	02750303

Step 6.6.1 Reflector, U-Clip and Reflector Support Installation

The pictorial drawings of the heater construction in *Section 6* are schematic only and provide a general guideline of where hangers, reflector supports and U-clips are to be installed.

To ensure proper expansion and contraction movement of the reflectors, a combination of U-clips and reflector supports are used. The positioning of reflector supports and U-clips depend on the individual installation. Use either pop rivets or sheet metal screws instead of U-clips when installing end caps and joint pieces in areas where impact and high wind may be a factor.The following rules must be observed:

1. The first reflector after the burner must be affixed in the middle of the reflector with a reflector support and tight screws.

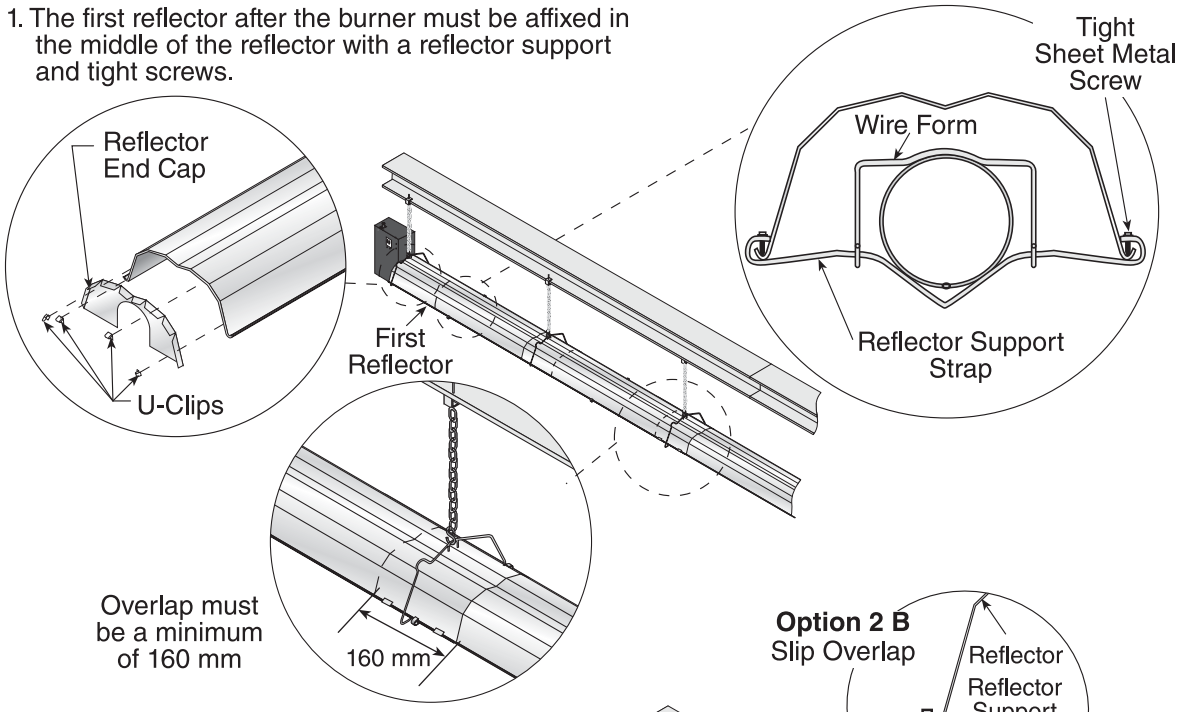

2. The overlap at the first and second reflector is a slip overlap. Thereafter, every third reflector joint is a slip overlap. A slip overlap is achieved by either:
   a.) both reflectors lay inside a hanger. (no reflector support needed).
   b.) using a reflector support with loose screws at the reflector overlap.

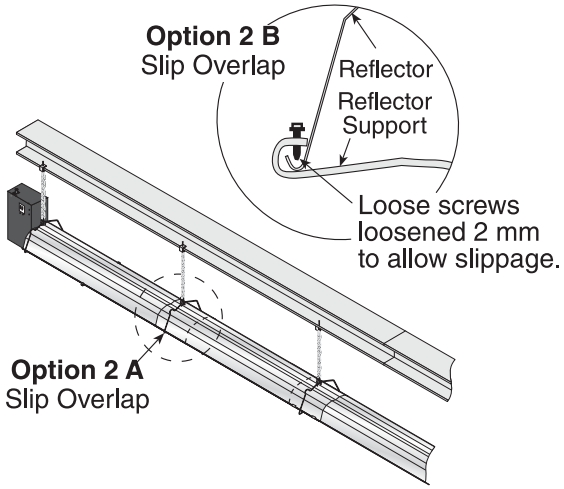

3. The remaining reflector overlaps require a non-slip overlap connection. To affix the reflectors together in a non-slip overlap either:
   a.) use reflector support and tight screws.
   b.) if both reflectors lay inside a hanger, u-clips or sheet metal screws may be used.

   This section of three reflectors joined together must be affixed to the tube with at least one reflector support with tight screws.

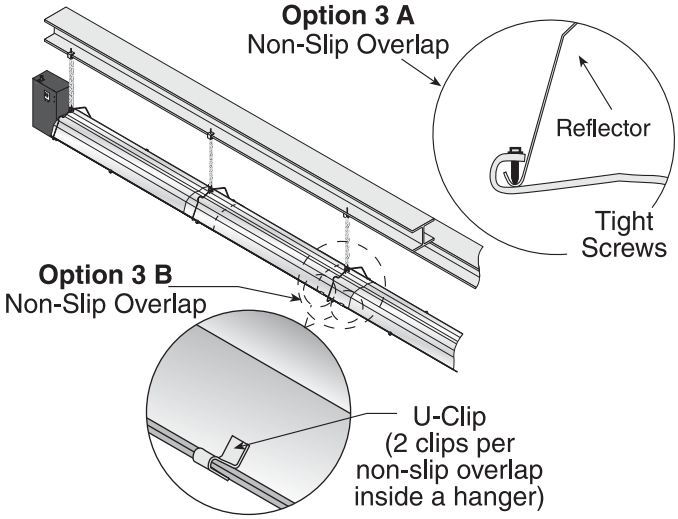

Description	Part Number
Reflector Support Package	**03050010**
Wire Form	91908004
Reflector Support Strap	03050000
Screw #8 x 3/4	94320812
U-Clip Package	91107720
Reflector End Cap	027508XX

Step 6.7 Double Linear Tee Installation (for double linear heaters only)

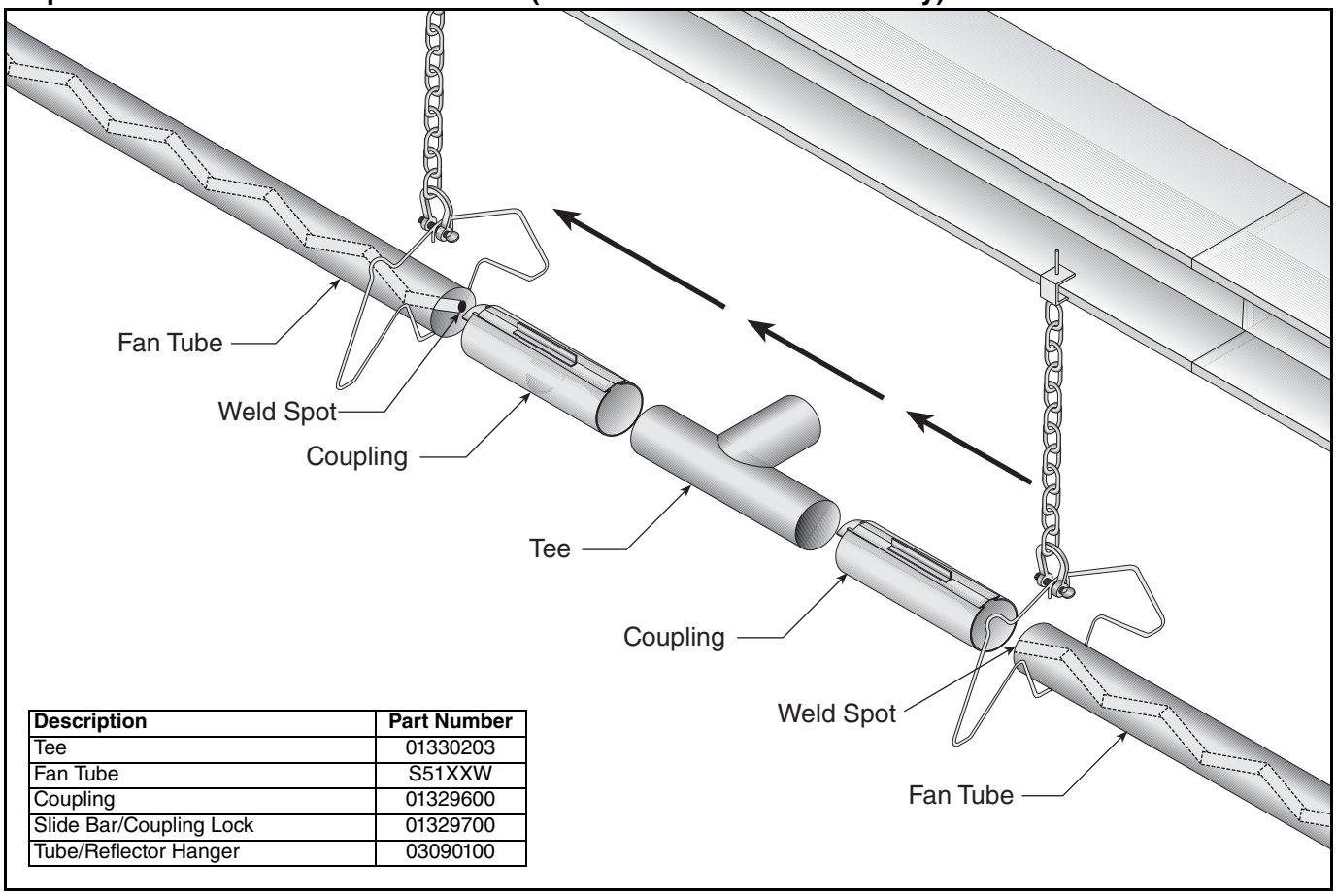

Description	Part Number
Tee	01330203
Fan Tube	S51XXW
Coupling	01329600
Slide Bar/Coupling Lock	01329700
Tube/Reflector Hanger	03090100

SECTION 7: U-TUBE HEATER INSTALLATION

⚠ WARNING

Cut/Pinch Hazard

Wear protective gear during installation, operation and service.

Edges are sharp.

Failure to follow these instructions can result in injury.

The figures in this section provide a general overview of component placement in a U-tube system. The location of some components such as supports and couplings is crucial for proper installation. Assemble the heater components as shown *on Page 27, Figure 23*.

For optional reflector configurations for U-tube heaters, *See Page 8, Figure 11 through Page 9, Figure 17*. Install appropriate suspension hardware, beam clamps, chain or rod at predetermined locations. Adjustments of chain length will provide uniform pitch.

If any step is unclear, please contact Roberts-Gordon Europe Limited at +44(0)121 506 7700.

7.1 U-Tube Standard Parts List

Part No.	Description	BH15UT	BH20UT	BH25UT BH25UT/EF	BH30UT BH30UT/EF	BH35UT BH35UT/EF	BH40UT BH40UT/EF	BH45UT BH45UT/EF	BH50UT BH50UT/EF
072XXXXX	Burner Assembly (Input and Fuel Varies)	1	1	1	1	1	1	1	1
07260001	Fan Package XP1	1	1	1	1	-	-	-	-
07260002	Fan Package XP2	-	-	-	-	1	1	1	-
07260003	Fan Package XP3	-	-	-	-	-	-	-	1
03051100	Burner Tube, 100 mm x 3048 mm	1	1	1	1	1	1	1	1
91409408	Tube, 100 mm x 3048 mm	-	-	-	2	2	2	2	2
91409423	Tube, 100 mm x 1524 mm	-	2	2	-	-	-	2	2
S5127W	Fan Tube, 100 mm x 3048 mm, with 3048 mm Swirler	-	1	1	1	1	1	1	1
S5134W	Fan Tube, 100 mm x 3048 mm, with 2134 mm Swirler	1	-	-	-	-	-	-	-
01335901	U-Bend	1	1	1	1	1	1	1	1
01329600	Standard Coupling Assembly	2	4	4	4	4	4	6	6
01329700	Coupling Lock	2	4	4	4	4	4	6	6
02750303	Reflector, Aluminium, 2439 mm	4	4	4	6	6	6	8	8
027503SS	Reflector, Stainless Steel, 2439 mm (Optional)*	4	4	4	6	6	6	8	8
02750800	Reflector End Cap, Aluminium	4	4	4	4	4	4	4	4
027508SH	Reflector End Cap, Stainless (Optional)*	4	4	4	4	4	4	4	4
03090100	Tube and Reflector Hanger	4	6	6	6	6	6	8	8
01318901	Tube Clamp Package (including Nut, Washer & Bolt)	1	1	1	1	1	1	1	1
91908004	Wire Form	2	4	4	4	4	4	6	6
03050000	Reflector Support Strap	2	4	4	4	4	4	6	6
03020501	U-Bend Support Bracket	1	1	1	1	1	1	1	1
E0007576	Bow Shackle**	4	6	6	6	6	6	8	8
91107720	U-Clip Package (20 Pieces)	2	2	2	2	2	2	2	2
91912501	U-Bolt M6	2	2	2	2	2	2	2	2
C0090B	Nut M6	6	6	6	6	6	6	6	6
96411500	Lockwasher 6 mm	6	6	6	6	6	6	6	6

Part No.	Description	BH15UT	BH20UT	BH25UT BH25UT/EF	BH30UT BH30UT/EF	BH35UT BH35UT/EF	BH40UT BH40UT/EF	BH45UT BH45UT/EF	BH50UT BH50UT/EF
94320812	Screw #8 x 3/4 (3.9 mm x 19 mm), (goes with 03050000)	4	8	8	8	8	8	12	12
S7199K	Damper Flange Assembly (For use on Multiburner Systems)	1 Per Heater							

**PVC coating must be removed prior to installation.*

***Some models may receive S-hooks (P/N 91907302) or spring hooks (P/N 91903300), rather than bow shackles*

Figure 23: U-Tube Assembly Overview

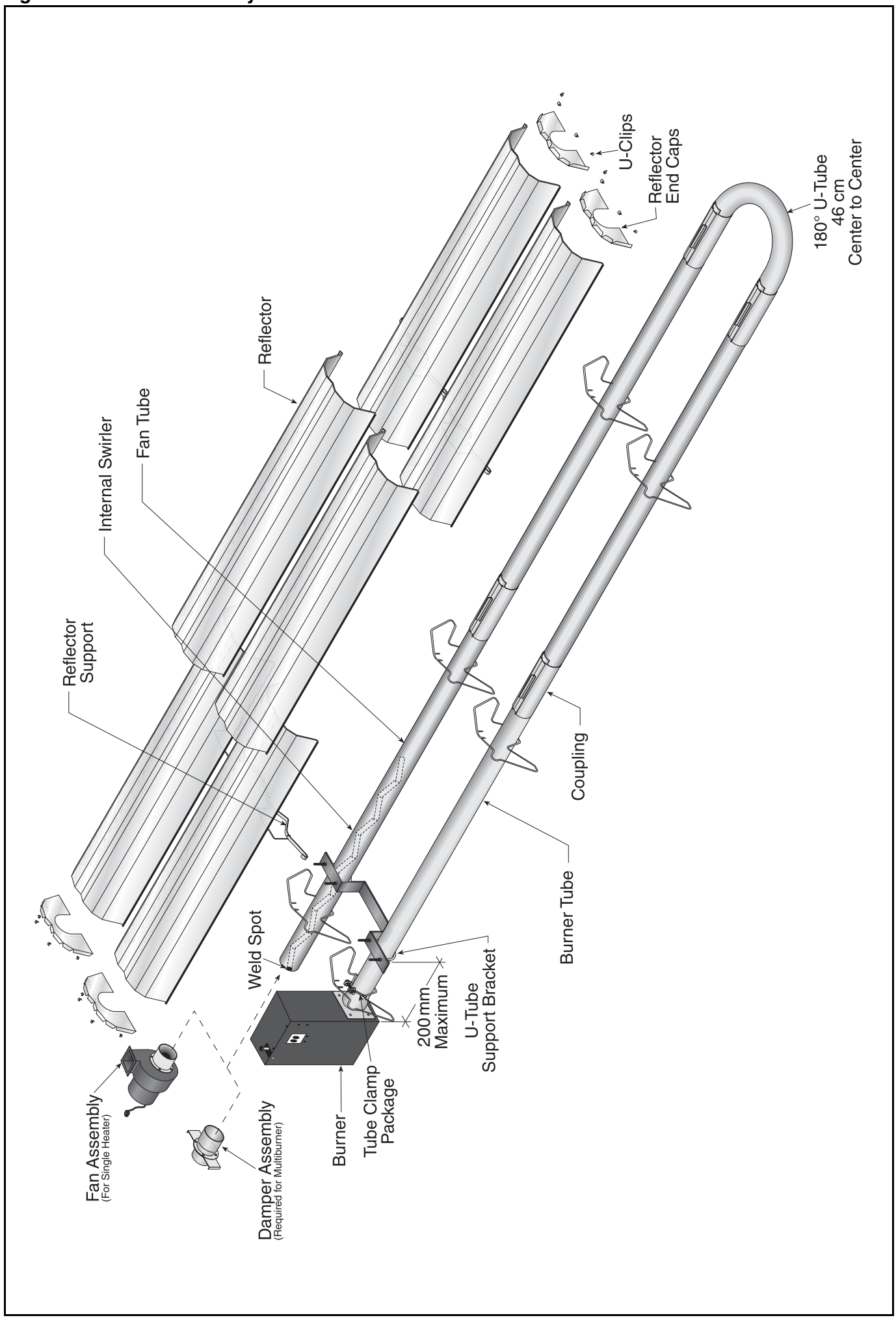

Figure 24: U-Tube Layout Overview

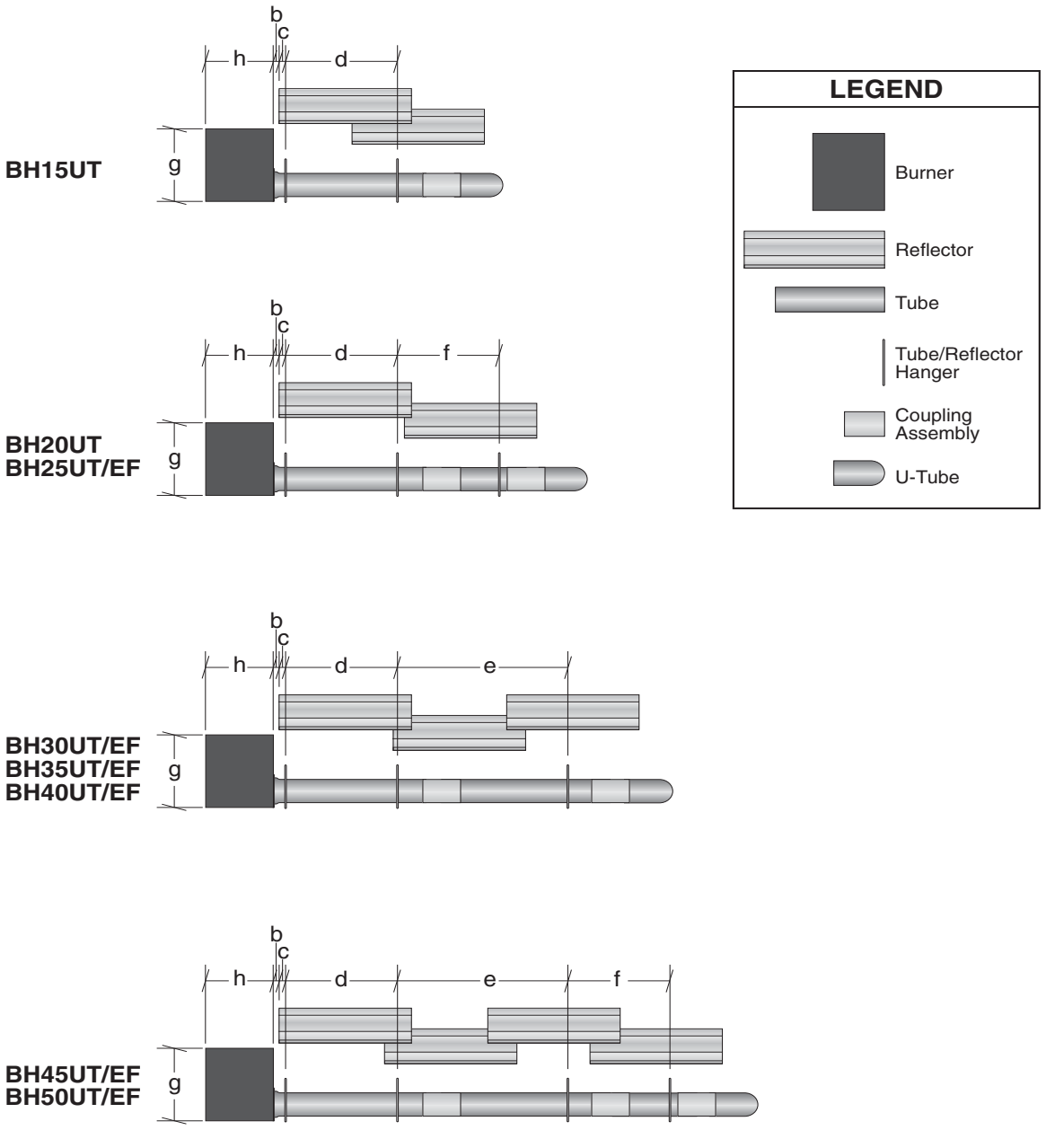

a = overall width (not shown) - 850 mm
b = end cap to burner/fan - 50 mm
c = end cap to hanger - 50 mm
d = distance first hanger - 2290 mm
e = distance typical between hangers - 3050 mm
f = distance between last full tube hanger and half tube hanger - 1900 mm
g = burner height - 366 mm
h = burner length - 291 mm

Model	BH15UT	BH20UT	BH25UT/EF	BH30UT/EF	BH35UT/EF	BH40UT/EF	BH45UT/EF	BH50UT/EF
Reflector Overlap (approx.)	1780 mm	250 mm	250 mm	580 mm	580 mm	580 mm	690 mm	690 mm

Step 7.2 U-Tube Hanger Placement

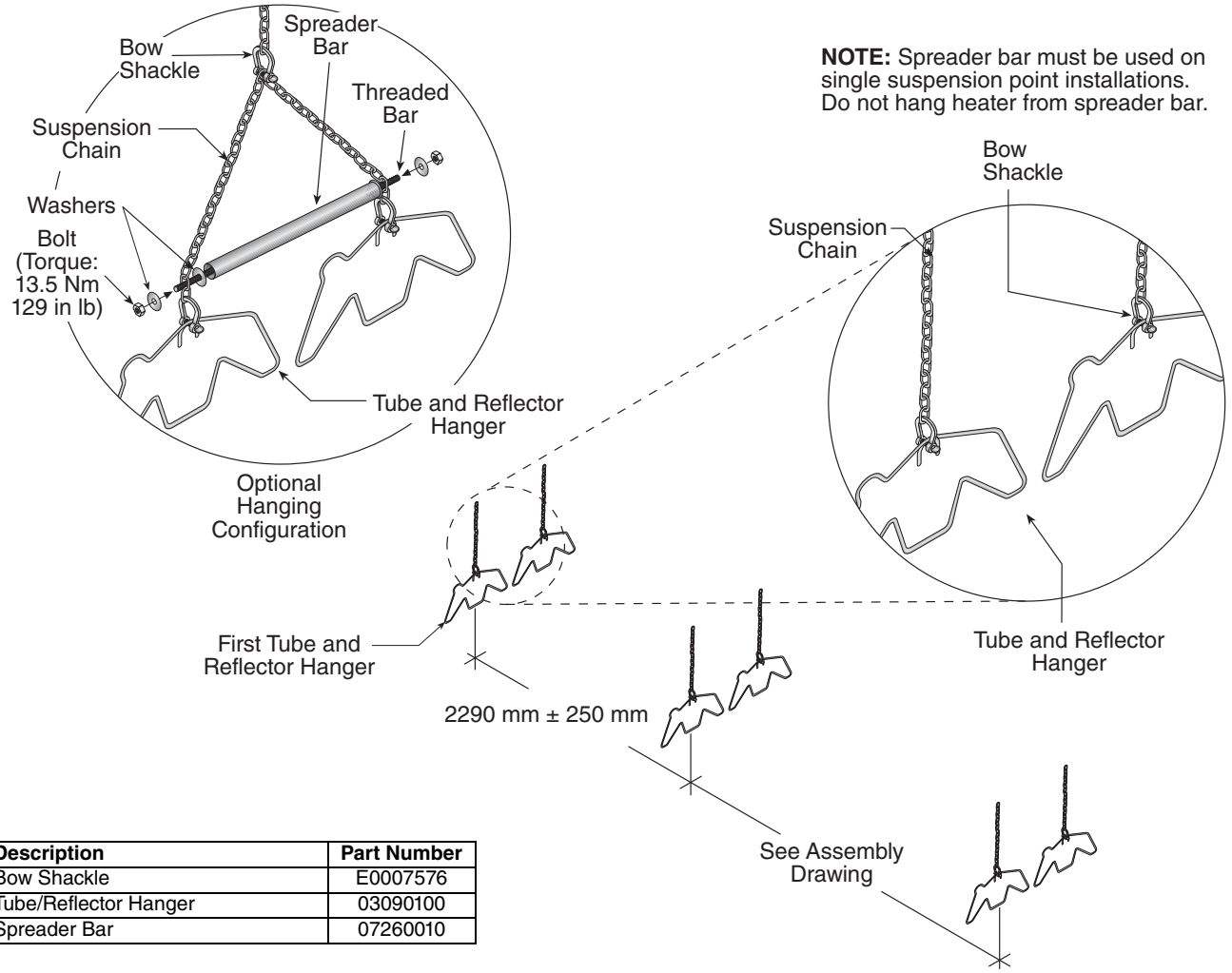

Description	Part Number
Bow Shackle	E0007576
Tube/Reflector Hanger	03090100
Spreader Bar	07260010

Step 7.3 Burner Tube and Fan Tube Installation

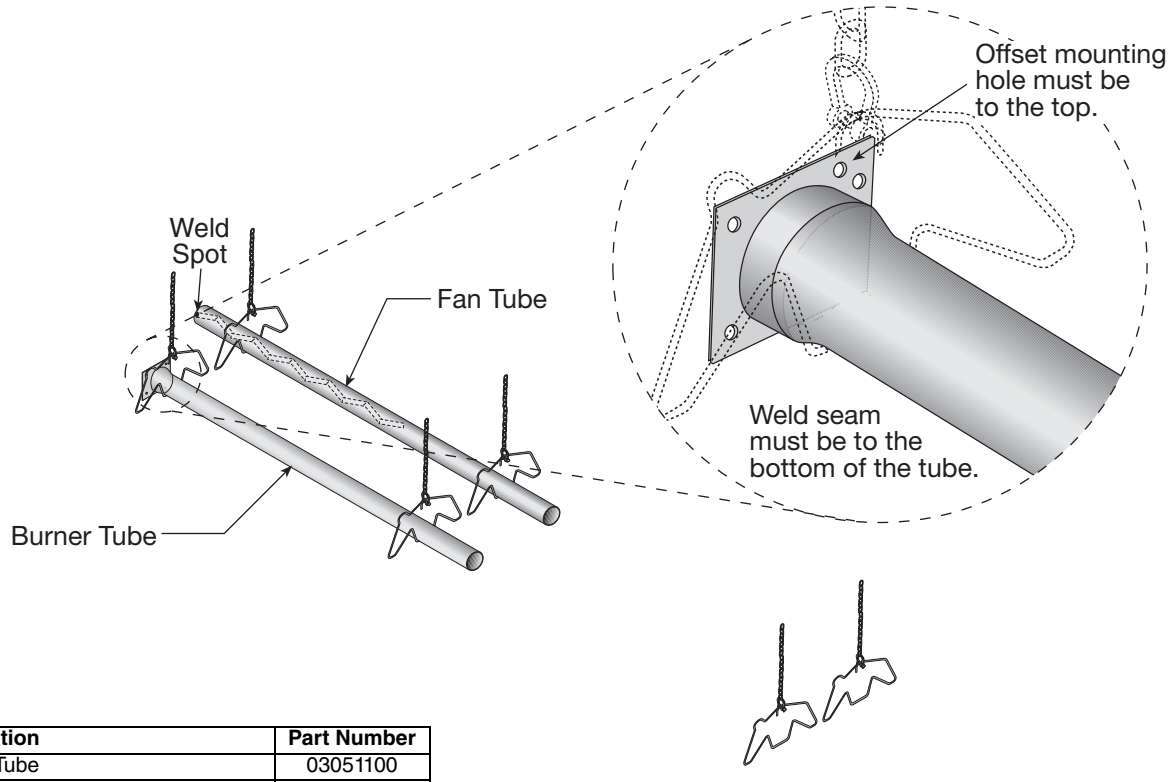

Description	Part Number
Burner Tube	03051100
Fan Tube	S5127W

Step 7.3.1 Tube Clamp Package Installation

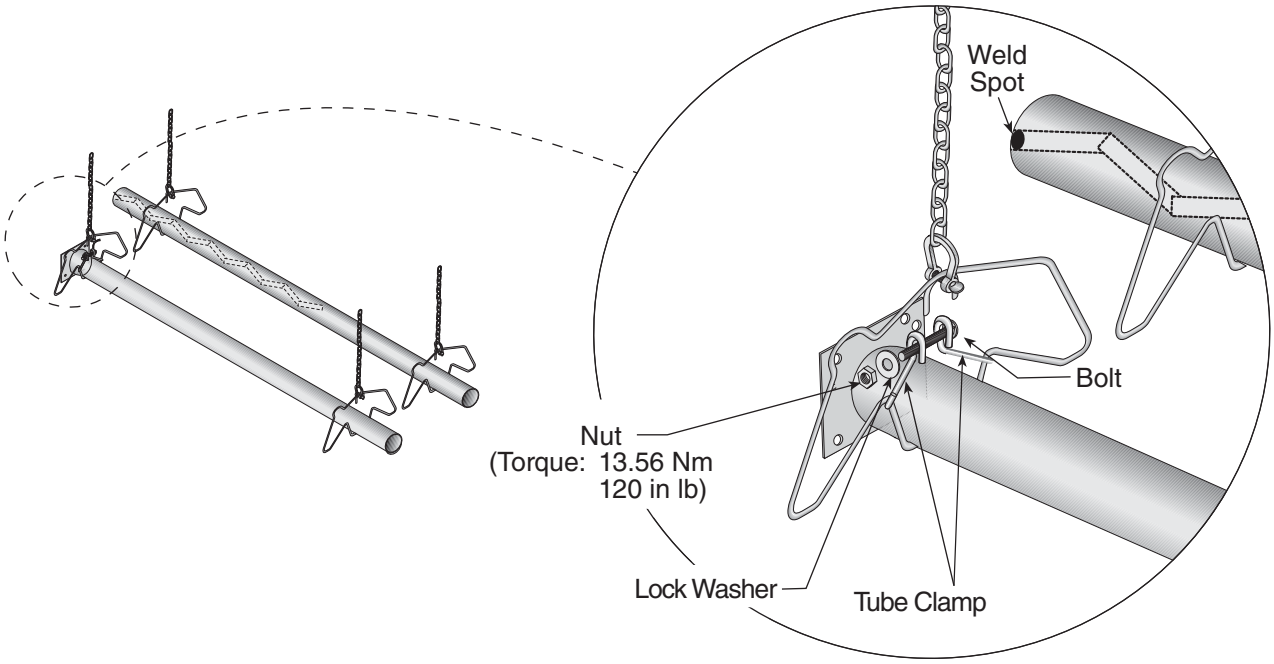

Note: Tube clamp package should be installed 100 mm from burner tube plate.

Other hangers do not need tube clamp packages.

Description	Part Number
Tube Clamp Package	**01318901**
Tube Clamp	01396801
Bolt	97113940
Flat Washer	95211600
Nut	92113900

Step 7.4 U-Tube Support Bracket Assembly Installation

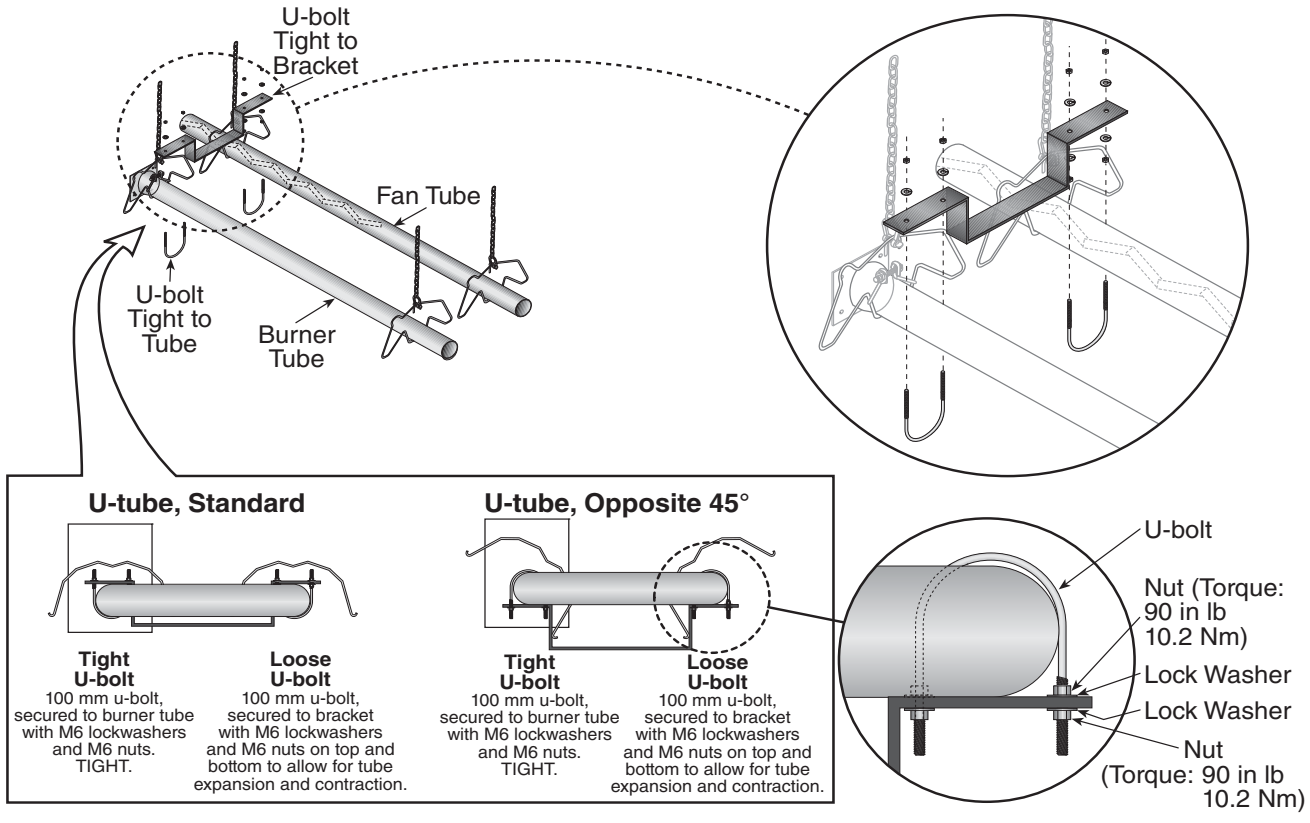

Step 7.5 Coupling and Tube Assembly

A Close coupling with tab.

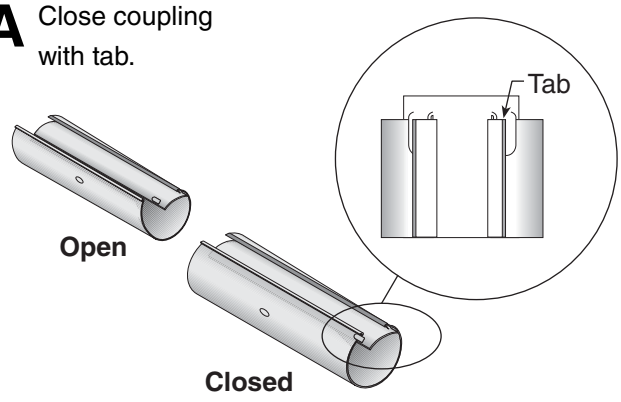

B Start slide bar/coupling lock onto coupling.

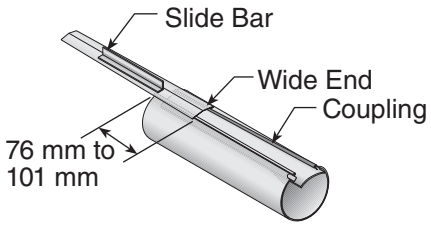

C Insert tubes into coupling.

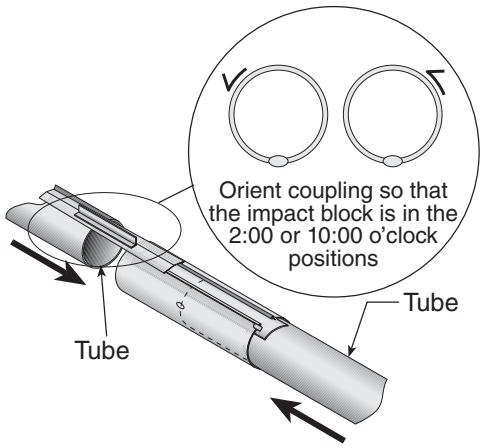

D Tighten coupling to join tubes.

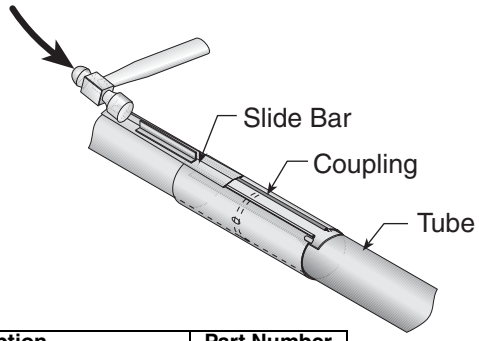

Description	Part Number
Coupling	01329600
Slide Bar/Coupling Lock	01329700
Tube	91409408

Step 7.5.1 Coupling and Tube Assembly (Continued)

Tighten slide bar as shown below.

Drive slide bar until tight.
End of slide bar should be
within tolerance listed below.

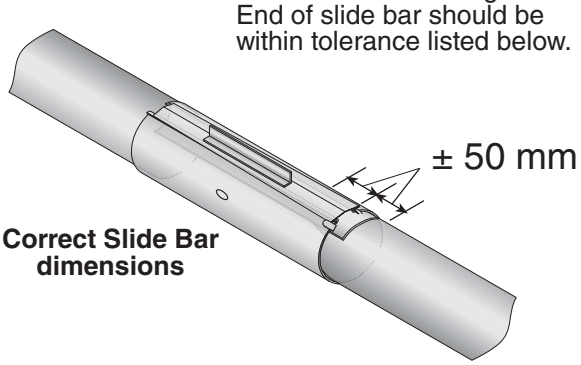

Correct Slide Bar dimensions

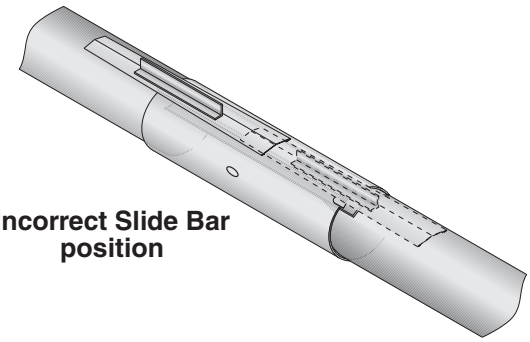

Incorrect Slide Bar position

- **Repeat *Step 7.5* A - D until all tubes are assembled.**

Step 7.6 Tube Installation

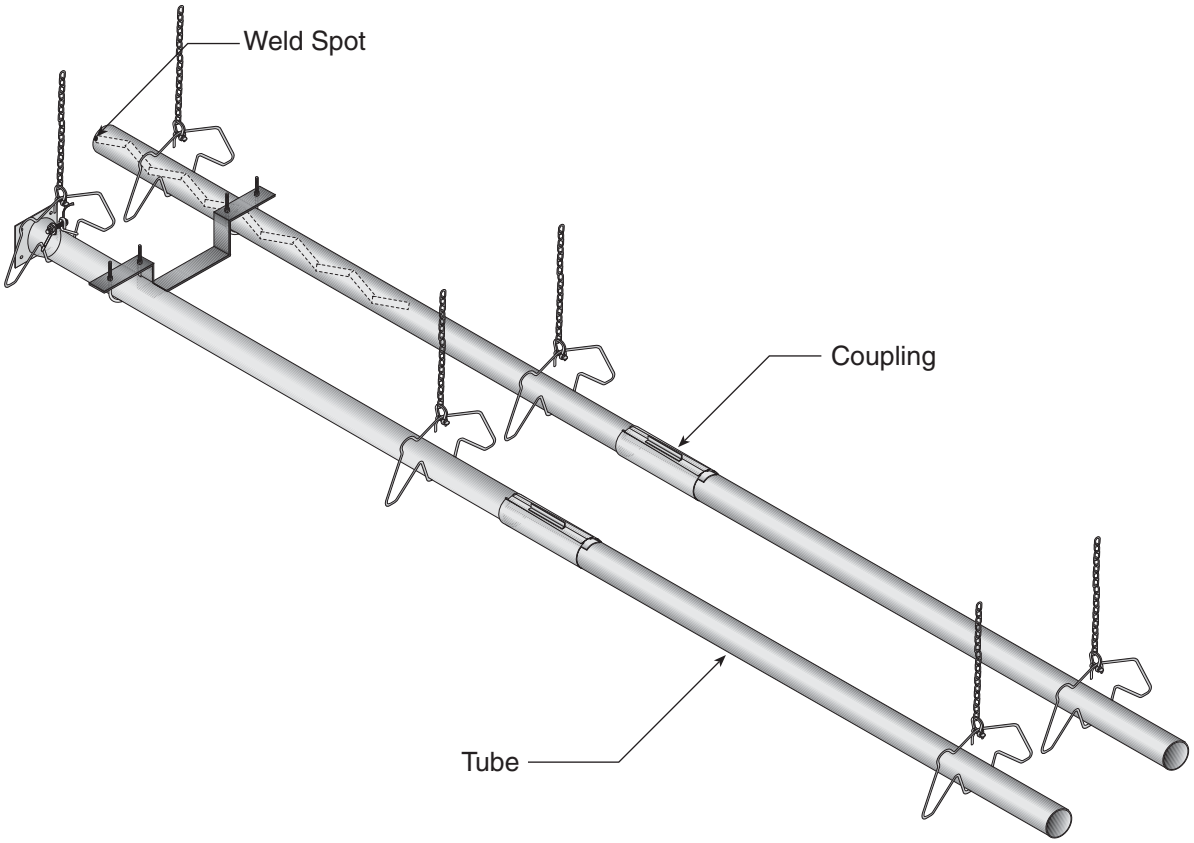

Step 7.7 U-Tube Installation

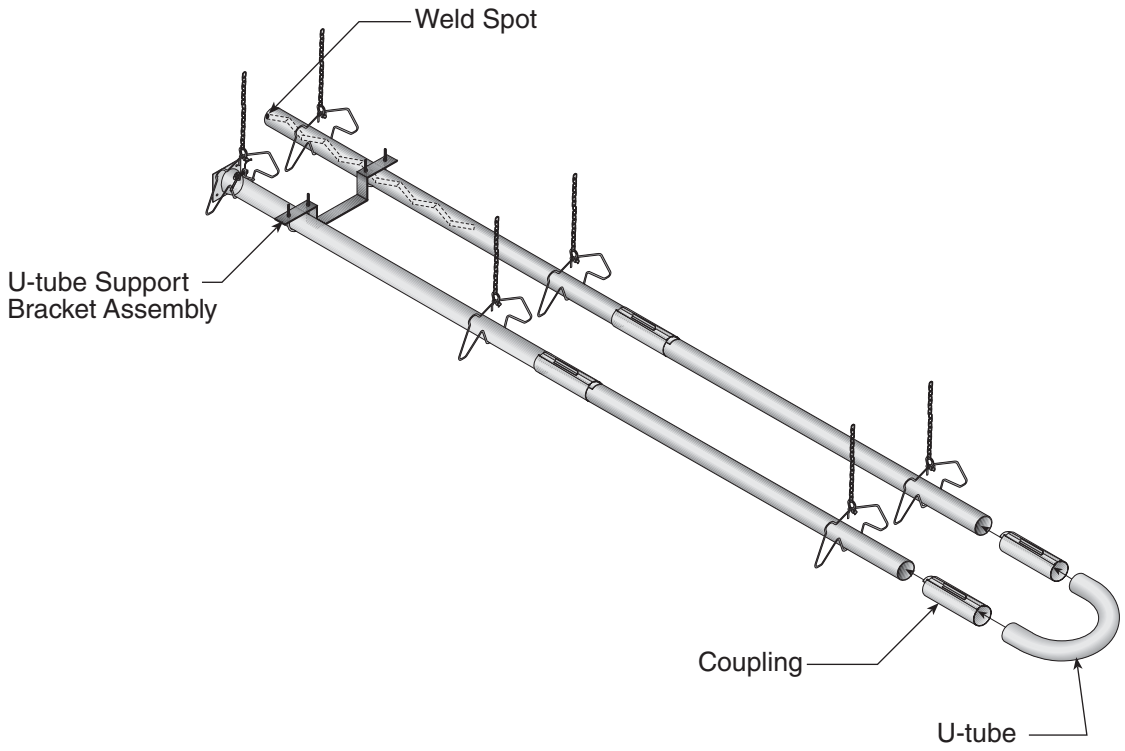

Description	Part Number
Coupling	01329600
Slide Bar/Coupling Lock	01329700
U-Tube	01335901

Step 7.8 Reflector Installation

⚠ WARNING

Fire Hazard

Support reflector with reflector hanger and support strap.

Reflector must not touch tube.

Failure to follow these instructions can result in death, injury or property damage.

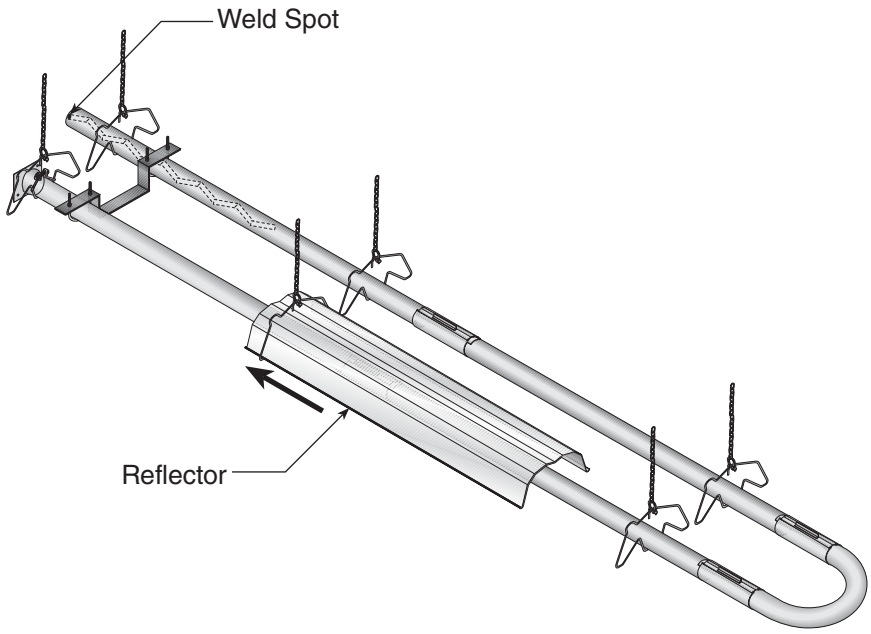

Description	Part Number
Reflector	02750303

Step 7.8.1 Reflector, U-Clip and Reflector Support Installation

The pictorial drawings of the heater construction in *Section 6* are schematic only and provide a general guideline of where hangers, reflector supports and U-clips are to be installed.

To ensure proper expansion and contraction movement of the reflectors, a combination of U-clips and reflector supports are used. The positioning of reflector supports and U-clips depend on the individual installation. Use either pop rivets or sheet metal screws instead of U-clips when installing end caps and joint pieces in areas where impact and high wind may be a factor. The following rules must be observed:

1. The first reflector after the burner must be affixed in the middle of the reflector with a reflector support and tight screws.

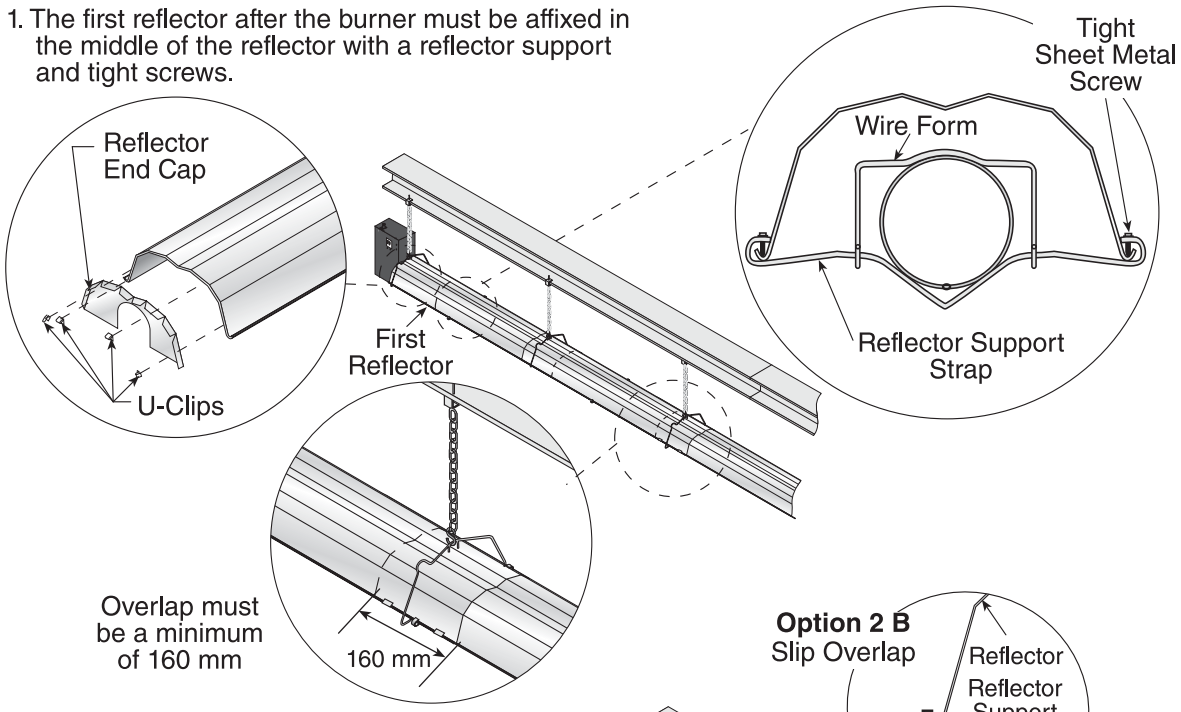

2. The overlap at the first and second reflector is a slip overlap. Thereafter, every third reflector joint is a slip overlap. A slip overlap is achieved by either:
   a.) both reflectors lay inside a hanger. (no reflector support needed).
   b.) using a reflector support with loose screws at the reflector overlap.

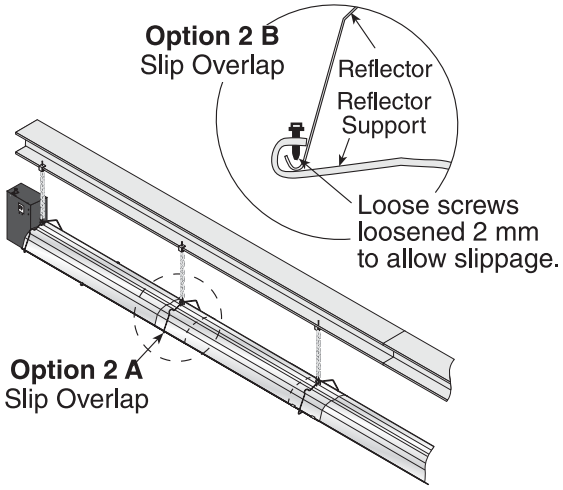

3. The remaining reflector overlaps require a non-slip overlap connection. To affix the reflectors together in a non-slip overlap either:
   a.) use reflector support and tight screws.
   b.) if both reflectors lay inside a hanger, u-clips or sheet metal screws may be used.

   This section of three reflectors joined together must be affixed to the tube with at least one reflector support with tight screws.

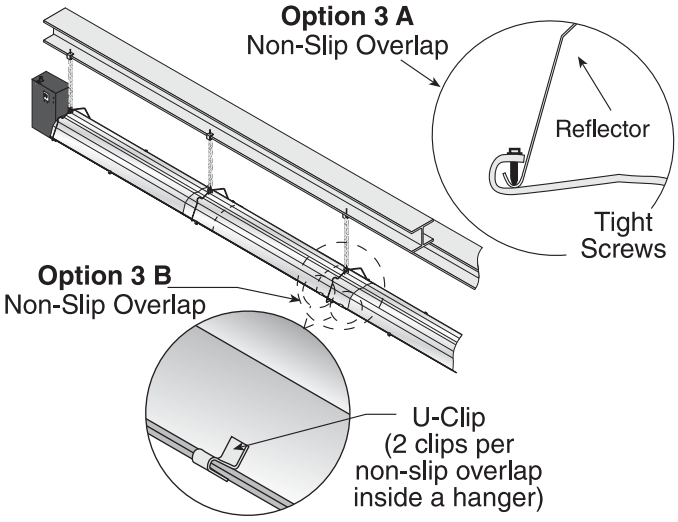

Description	Part Number
Reflector Support Package	**03050010**
Wire Form	91908004
Reflector Support Strap	03050000
Screw #8 x 3/4 (3.9 x 19 mm)	94320812
U-Clip Package	91107720
Reflector End Cap	027508XX

SECTION 8: MULTIBURNER CONFIGURATION & INSTALLATION

⚠WARNING

Severe Injury Hazard

Secure burner to burner tube with bolts and lockwashers.

Hang heater with materials with a minimum working load of 75 lbs (33 kg).

Failure to follow these instructions can result in death, injury or property damage.

⚠WARNING

Cut/Pinch Hazard

Wear protective gear during installation, operation and service.

Edges are sharp.

Failure to follow these instructions can result in injury.

8.1 Initial Assembly

See Page 13, Section 6 for linear heater assembly instructions.

See Page 25, Section 7 for U-tube heater assembly instructions.

Check layout drawings for location of manifold pipe installation.

Figure 25: Multiburner Damper Flange Installation

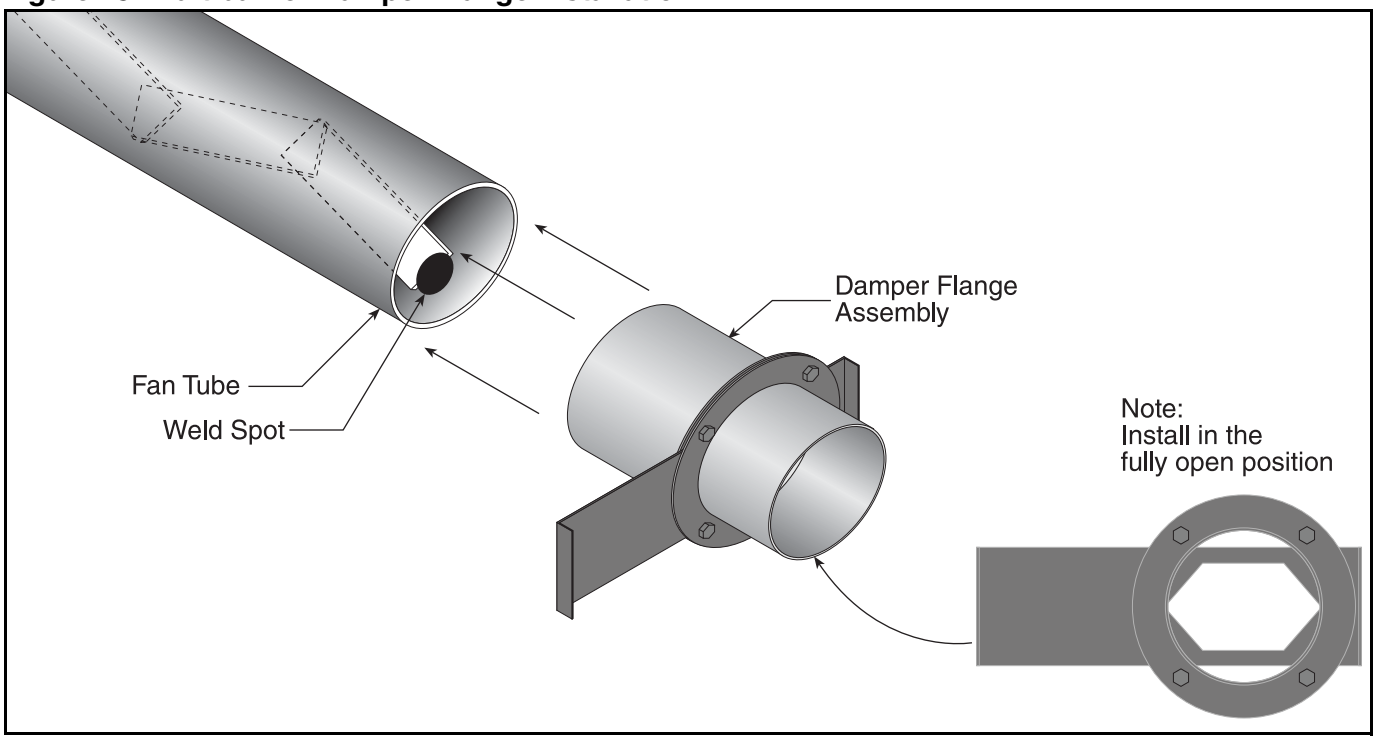

Figure 26: Typical Manifold Layout (Linear and U-Tube Configuration)

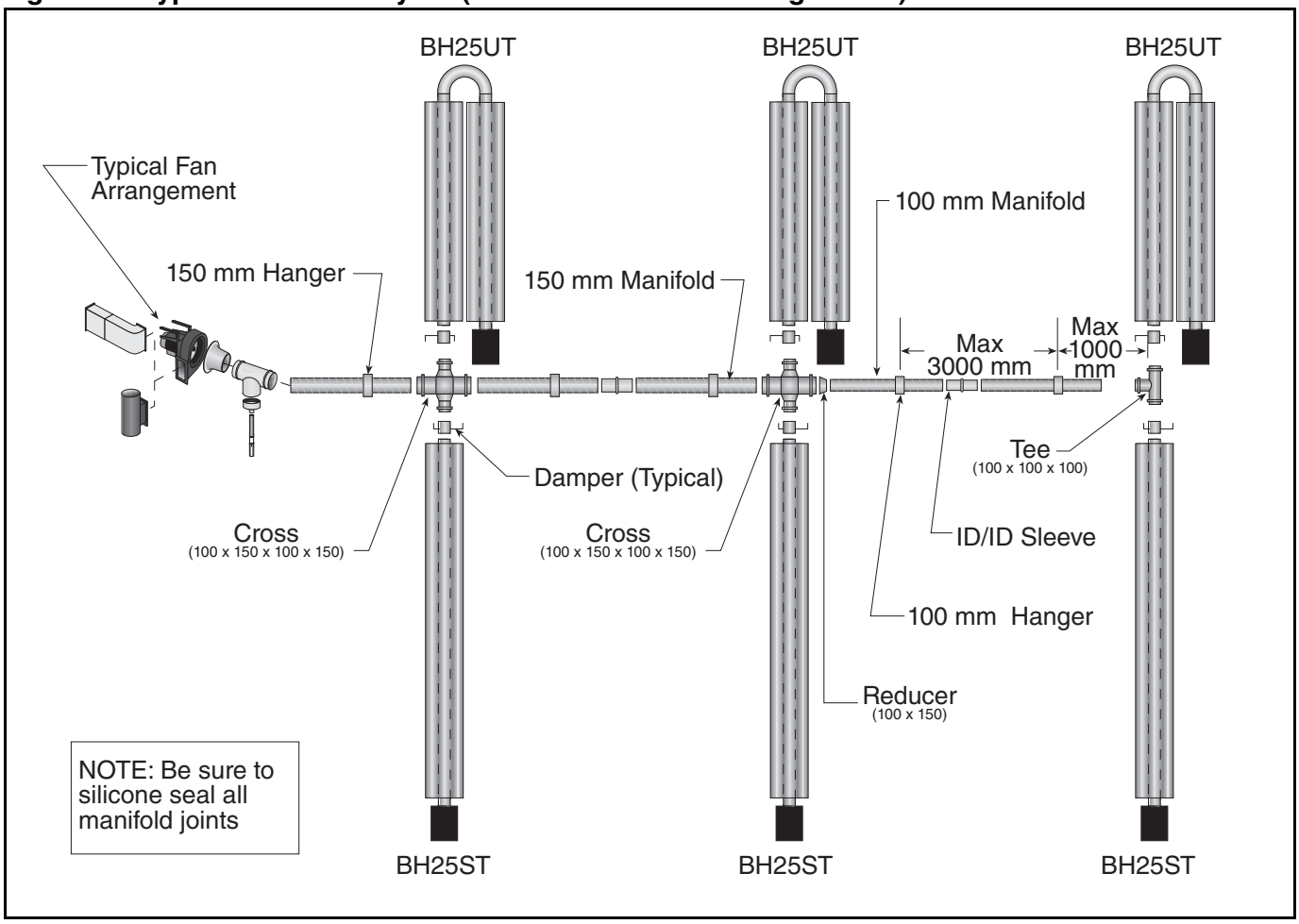

SECTION 9: BURNER & FAN INSTALLATION

Step 9.1 Burner Installation

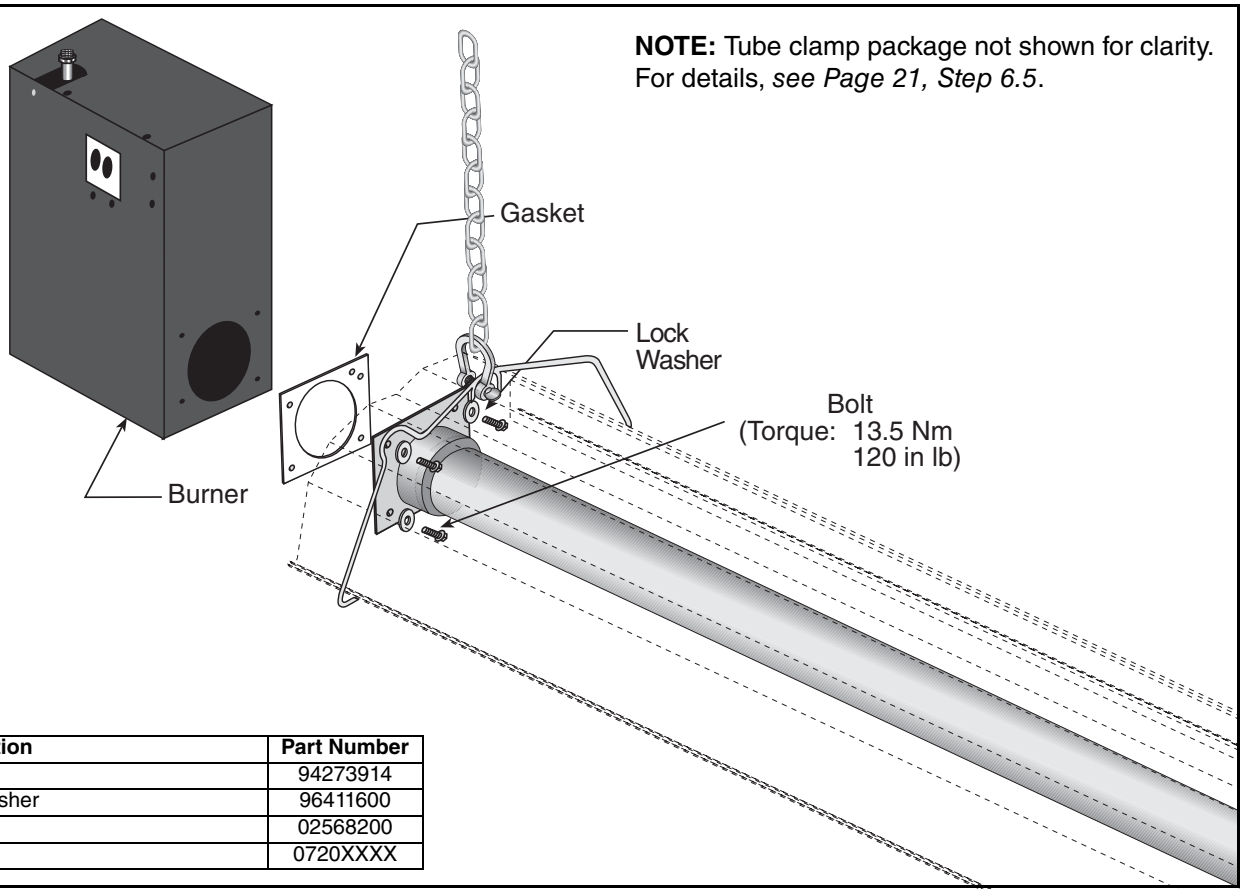

Description	Part Number
Bolt	94273914
Lock Washer	96411600
Gasket	02568200
Burner	0720XXXX

Step 9.2 Fan Assembly

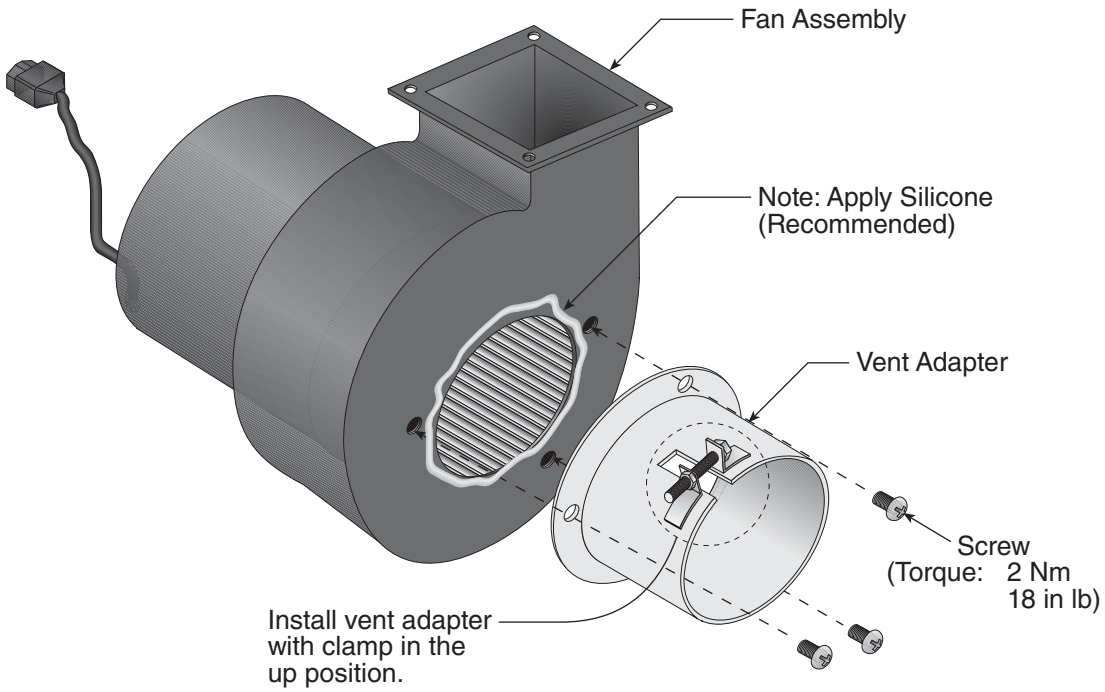

Description	Part Number
Fan Assembly	072600XX
Vent Adapter	9071060X
Screw	E00075XX
Inlet Gasket	90710703
Outlet Gasket	90710704

9.3 Linear & U-Tube Fan Installation

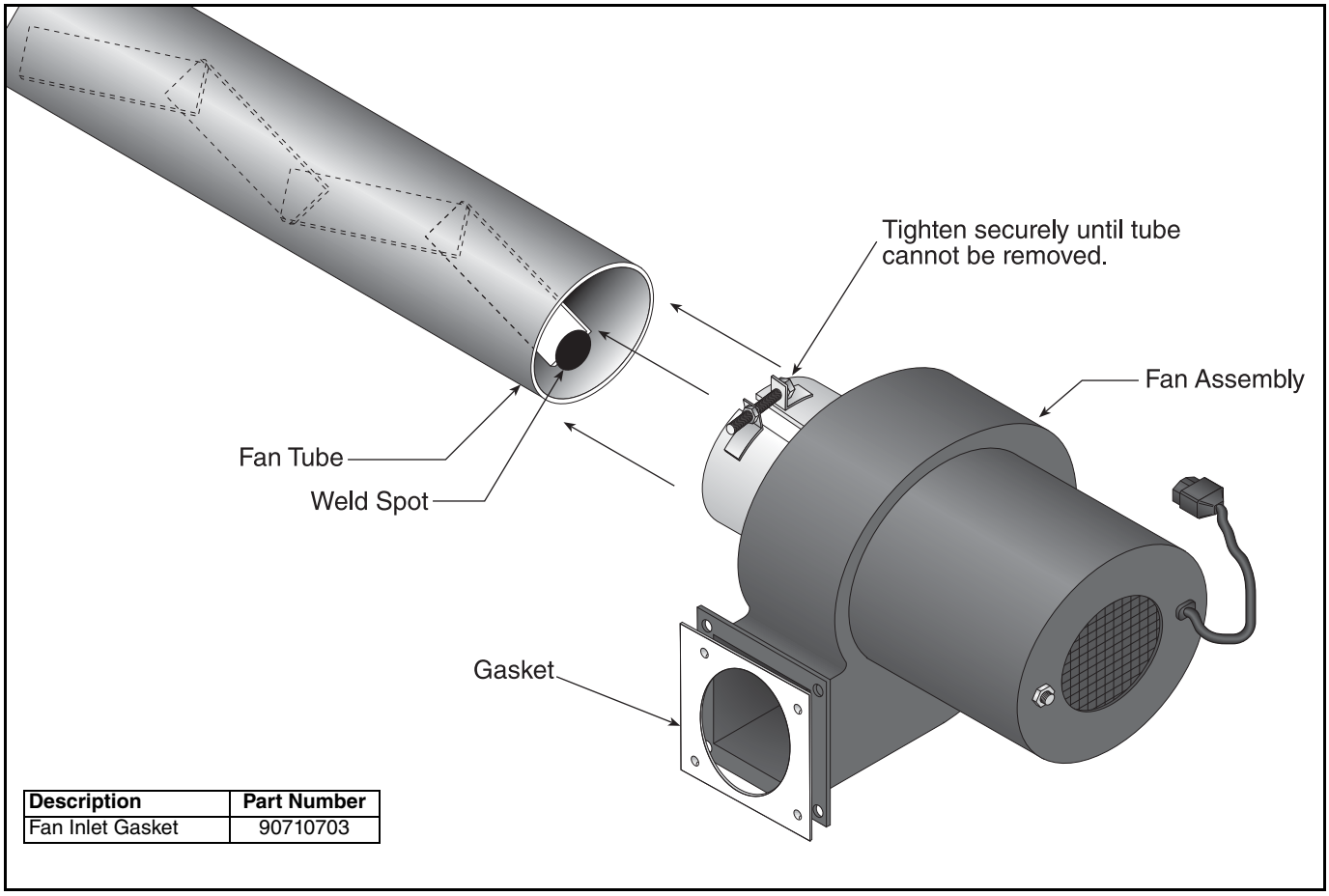

Description	Part Number
Fan Inlet Gasket	90710703

Step 9.4 Double Linear Fan Installation

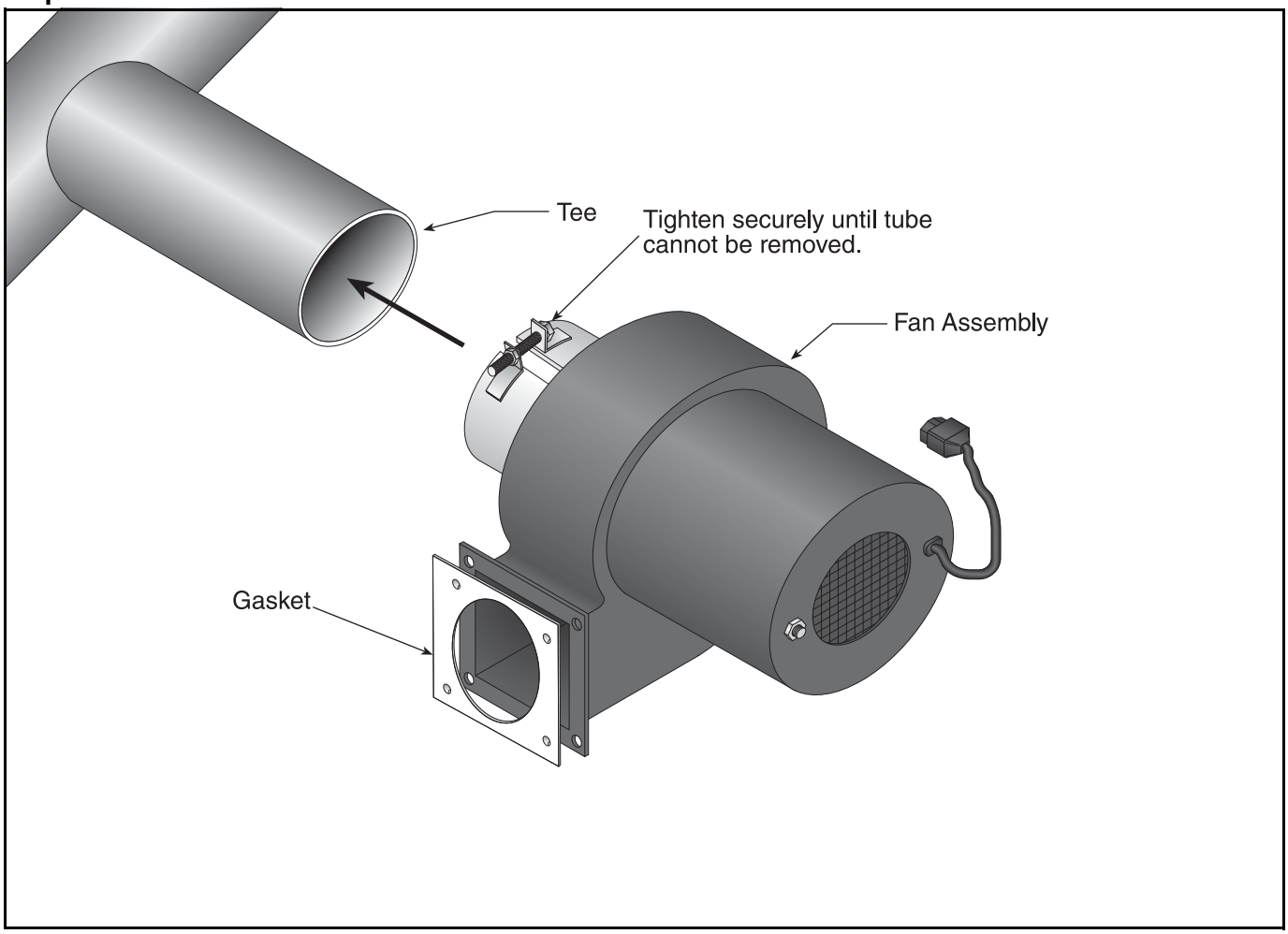

Step 9.4.1 Double Linear Fan Installation (Continued)

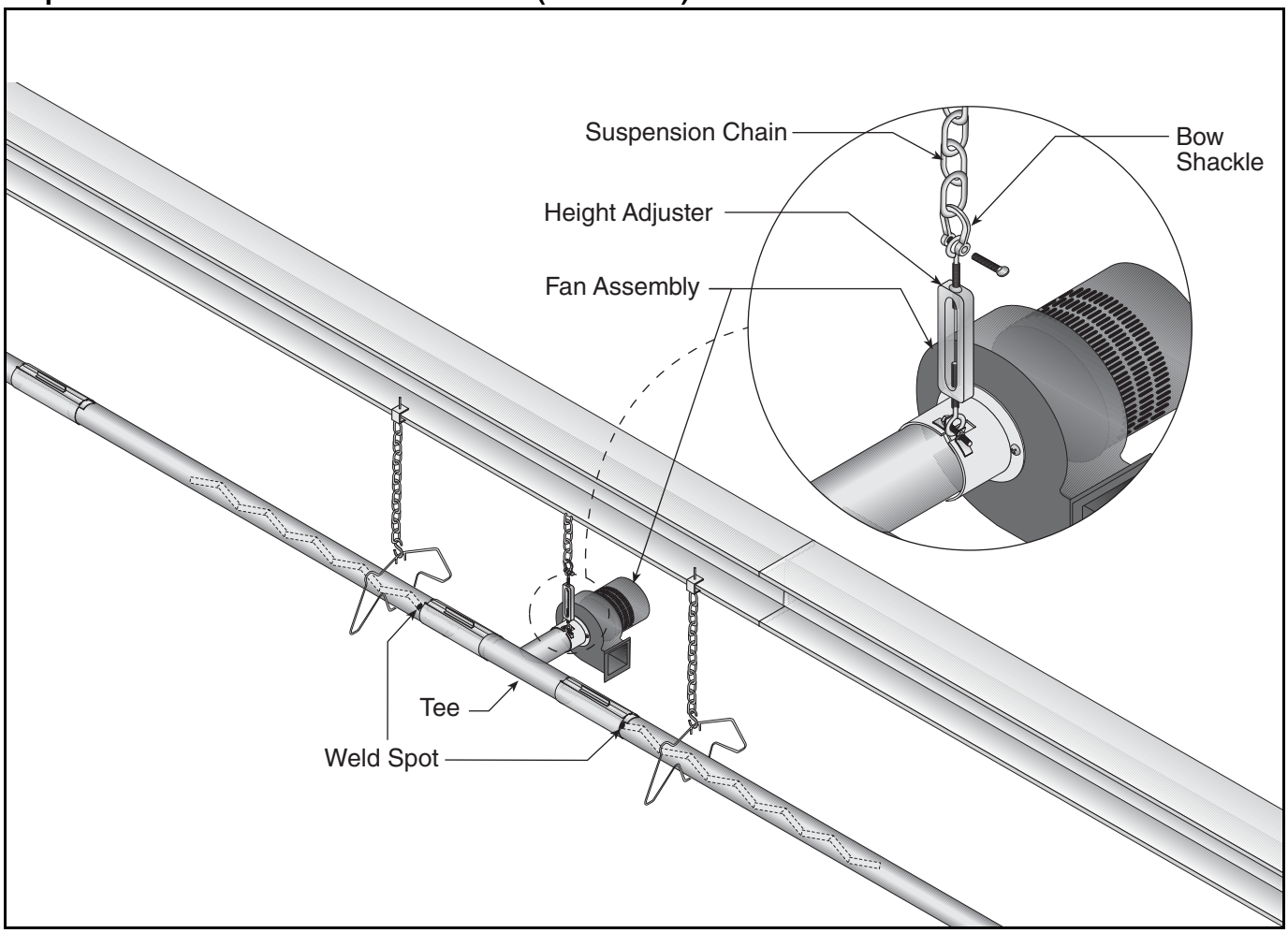

Step 9.5 Multiburner 83 BWLG / 90 BWTL Fan Assembly (Horizontal and Vertical Outlets)

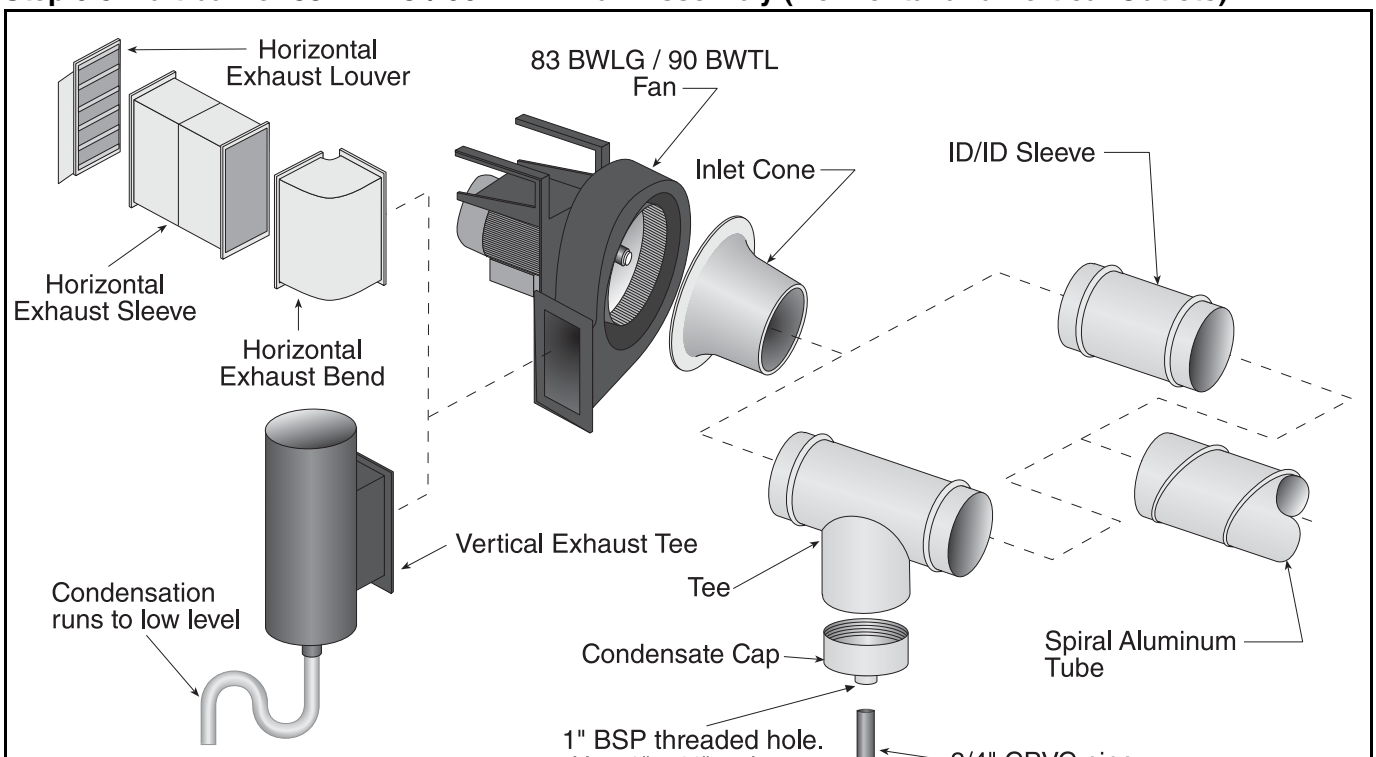

Description	Part Number
Vertical Exhaust Tee	C1324B
Horizontal Exhaust Bend	C1325B
Horizontal Exhaust Sleeve	C1326B
Horizontal Exhaust Louver	S5055F
Condensate Cap 4"	02718851
Condensate Cap 6"	02718852
Non-Return Valve	90201200

Step 9.6 Condensate Drain Assembly

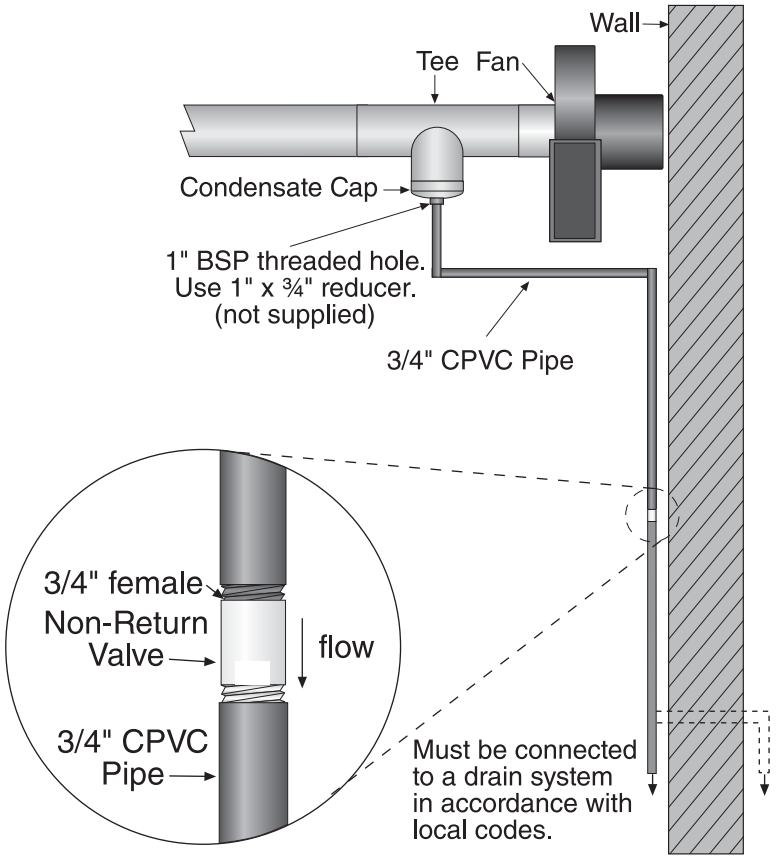

Description	Part Number
Non-Return Valve	01327001

SECTION 10: OPTIONAL HEATER ACCESSORIES

⚠WARNING

Cut/Pinch Hazard

Wear protective gear during installation, operation and service.

Edges are sharp.

Failure to follow these instructions can result in injury.

10.1 Reflector Side Extension Installation

Step 10.1.1 Bracket Installation

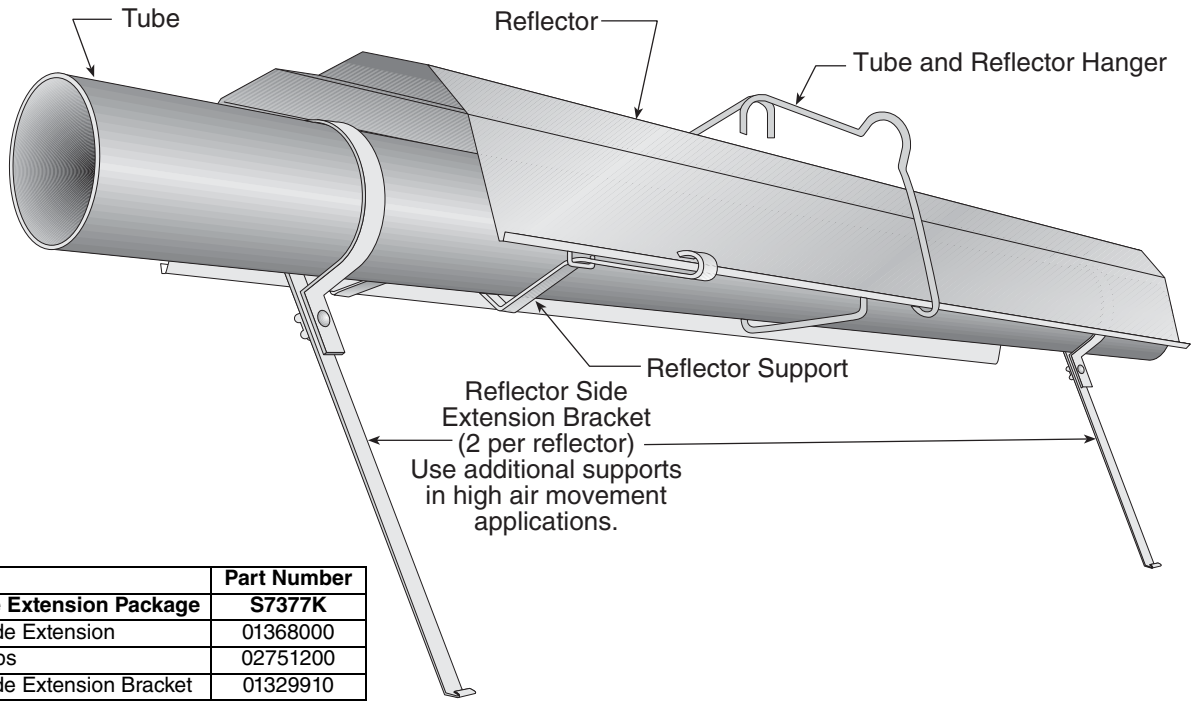

Description	Part Number
Reflector Side Extension Package	**S7377K**
Reflector Side Extension	01368000
Retainer Clips	02751200
Reflector Side Extension Bracket	01329910

Step 10.1.2 Side Reflector Installation

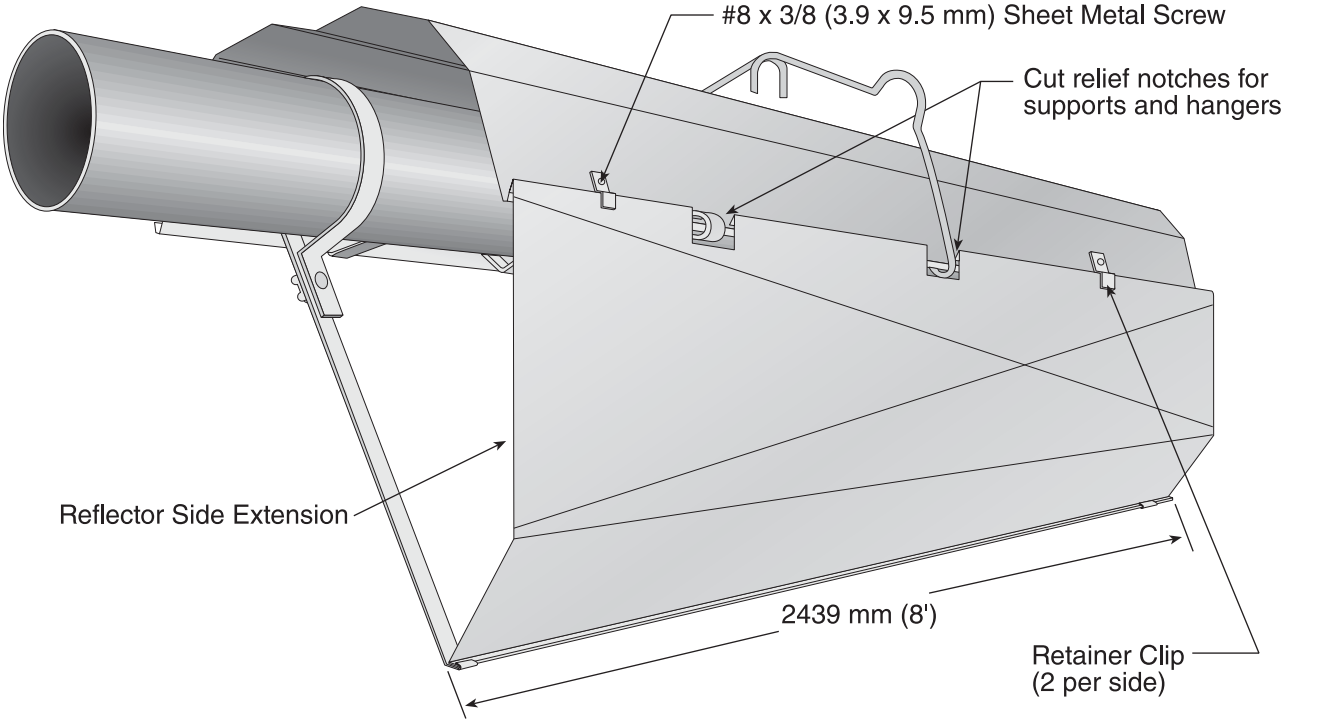

10.2 U-Tube Cover Installation

The package contains two reflector joint pieces (P/N 02750901), one 2439 mm (8') reflector and 18 x #8 sheet metal screws. Install the U-tube cover using the following procedure.

Step 10.2.1

Cut the 2439 mm (8') reflector in half to be used on both sides to cover the U-tube.

Step 10.2.2

Flatten 1220 mm (4') reflector edge where joint piece matches. Put a mark on the 1220 mm (4') reflector, directly over the tube center. Center the accessory joint piece on the mark and scribe its contour on the reflector. Scribe the location of the mounting holes.

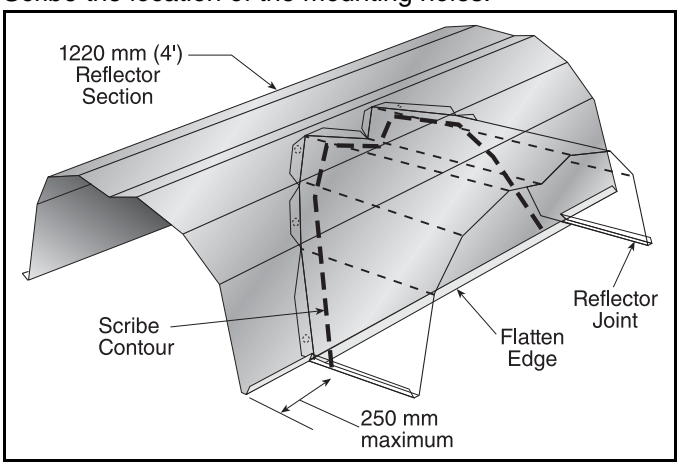

Step 10.2.3

Cut away the reflector to clear the tube, leaving about 250 mm (1") of material inside the scribed contour to attach the accessory joint. Drill or punch six 3 mm diameter holes in reflector in the positions shown below.

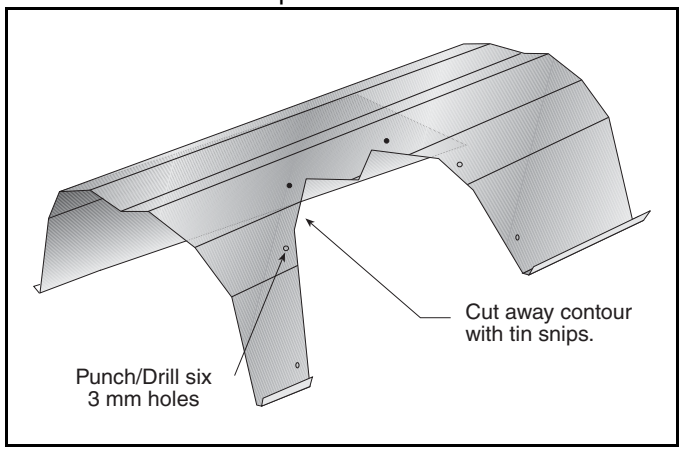

Step 10.2.4

Use six #8 sheet metal screws to attach the joint piece.

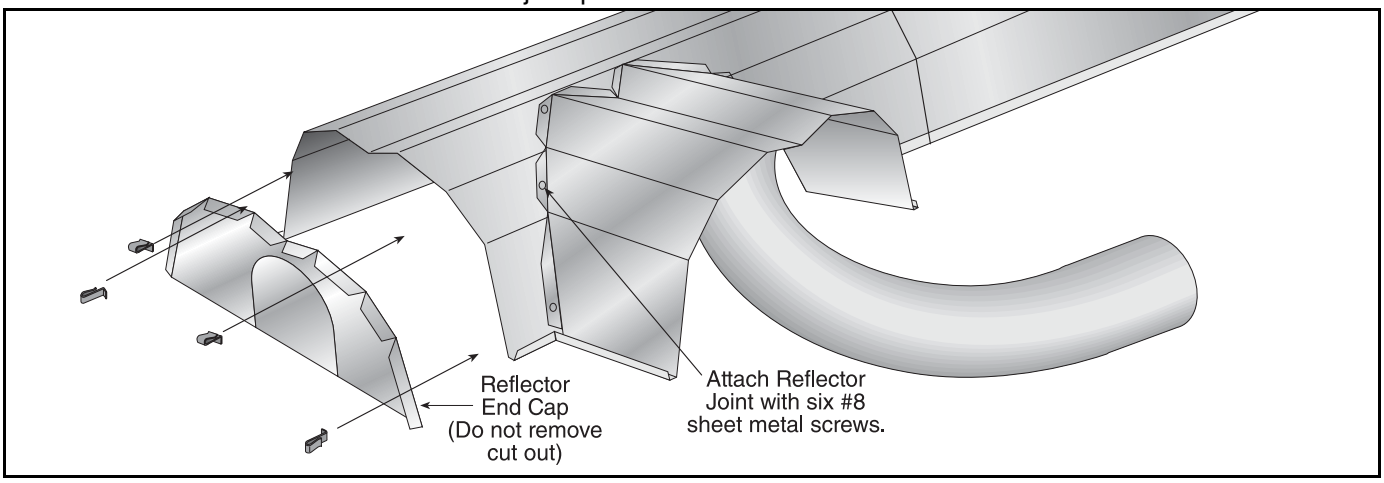

Repeat *Step 10.2.1 through Step 10.2.4* to attach the reflector joint piece on the other reflector.

Step 10.2.5

The overlap of both reflector joint pieces is attached with six #8 sheet metal screws.

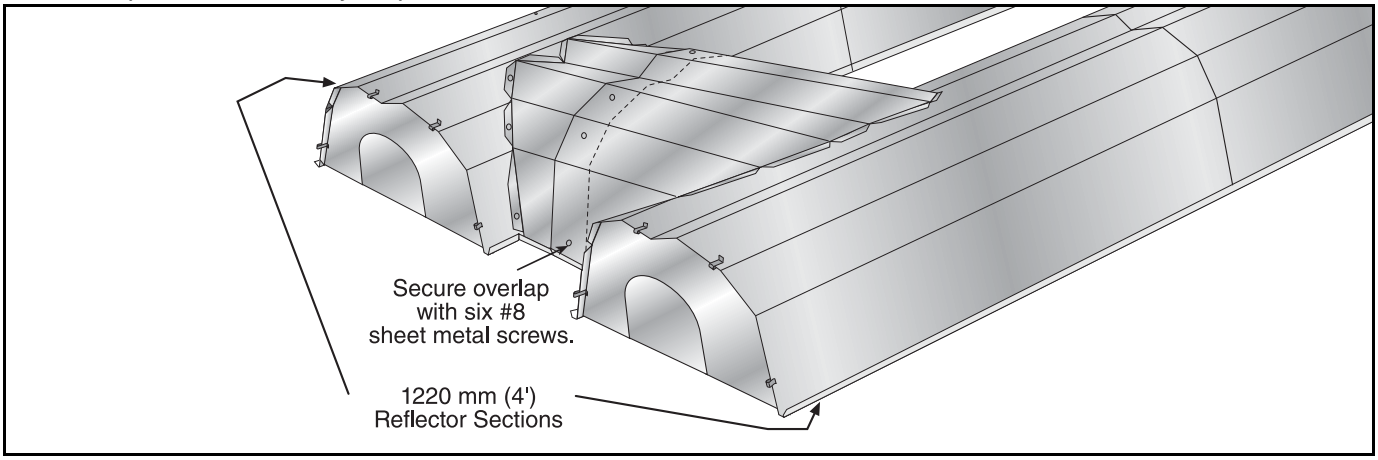

10.3 Decorative Grille Installation

Step 10.3.1 Grille Installation

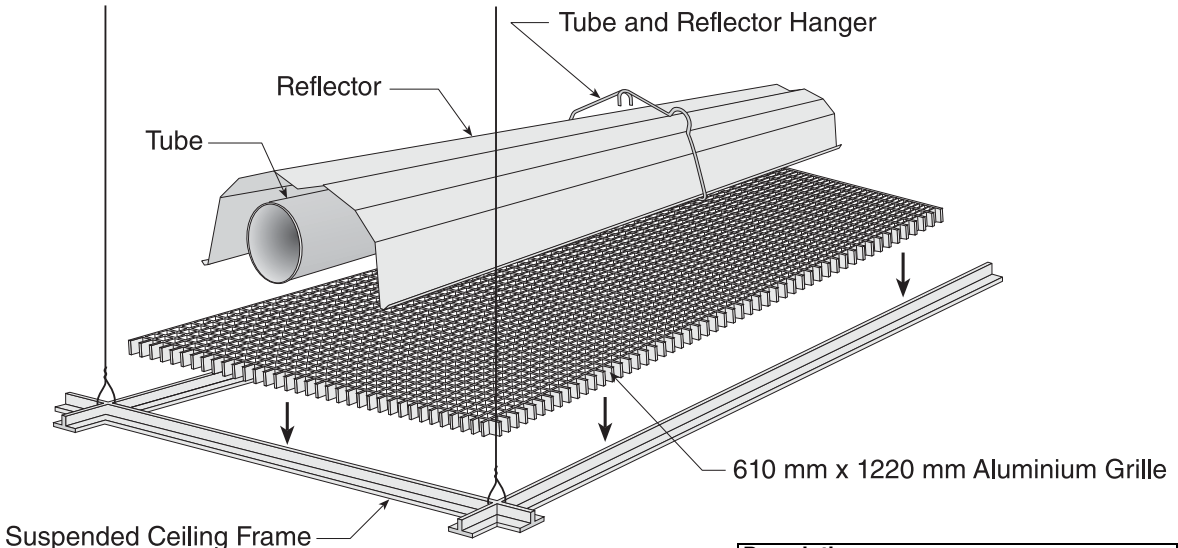

Description	Part Number
Aluminium Grille 610 mm X1220 mm	91407000

Step 10.3.2 Frame Shield Installation

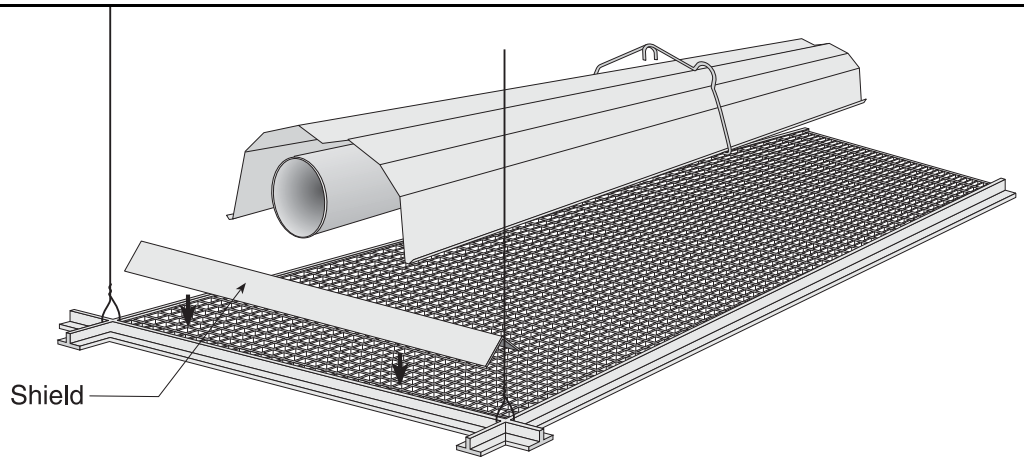

Step 10.3.3 Reflector Side Extension Installation for Decorative Grilles

NOTE: If the decorative grille system is to be installed in an area with considerable air movement, it is recommended that one #8 x 3/8" sheet metal screw be installed per reflector extension to prevent it from blowing over.

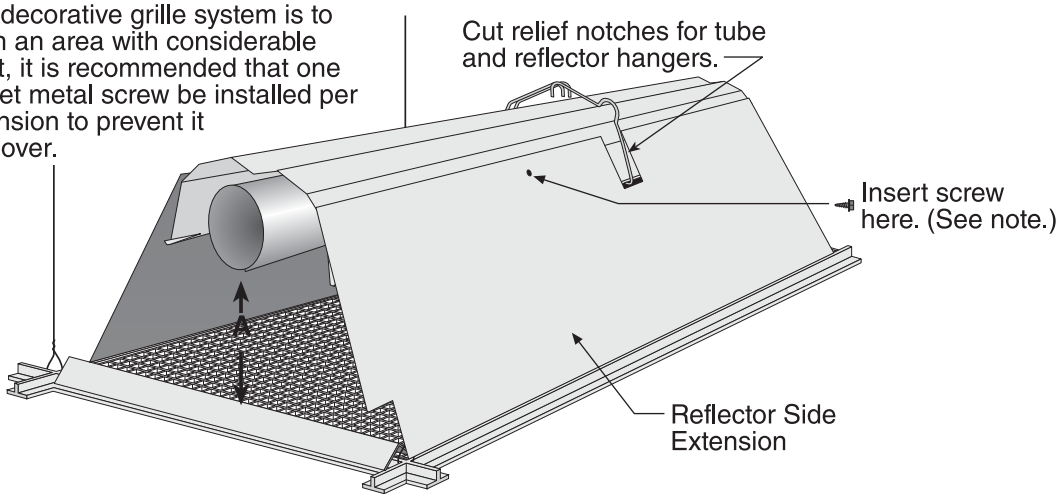

Distance "A"		Extension	
Minimum	Maximum	Part No.	Width
40	150 mm	01370408	200 mm
150	260 mm	01370412	300 mm
260	370 mm	01370416	400 mm

10.4 Protective Grille Installation

Step 10.4.1 Silicone Cap Installation

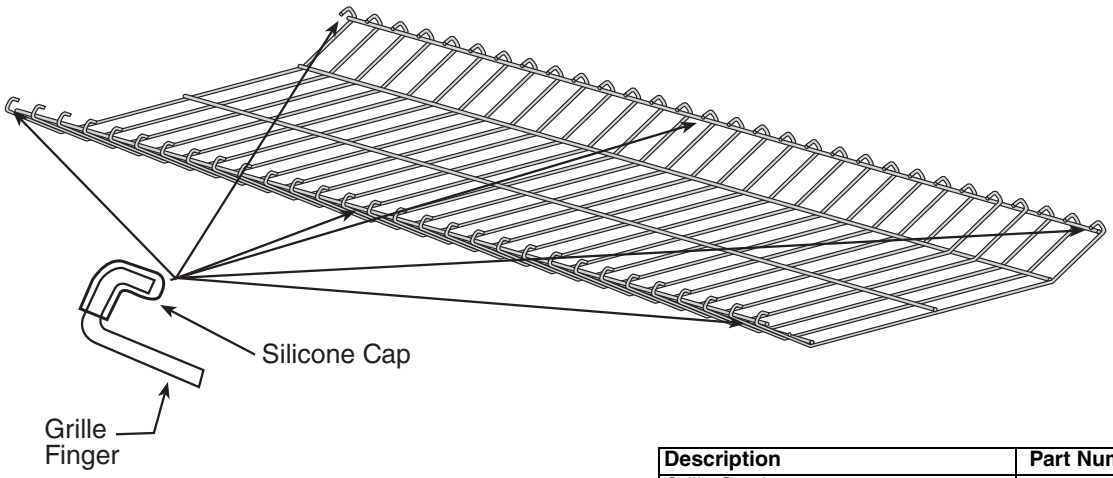

Description	Part Number
Grille Section	08050001
Grille End Cap	08050002
Silicone Cap	91915951-6P

Step 10.4.2 Grille End Cap Installation

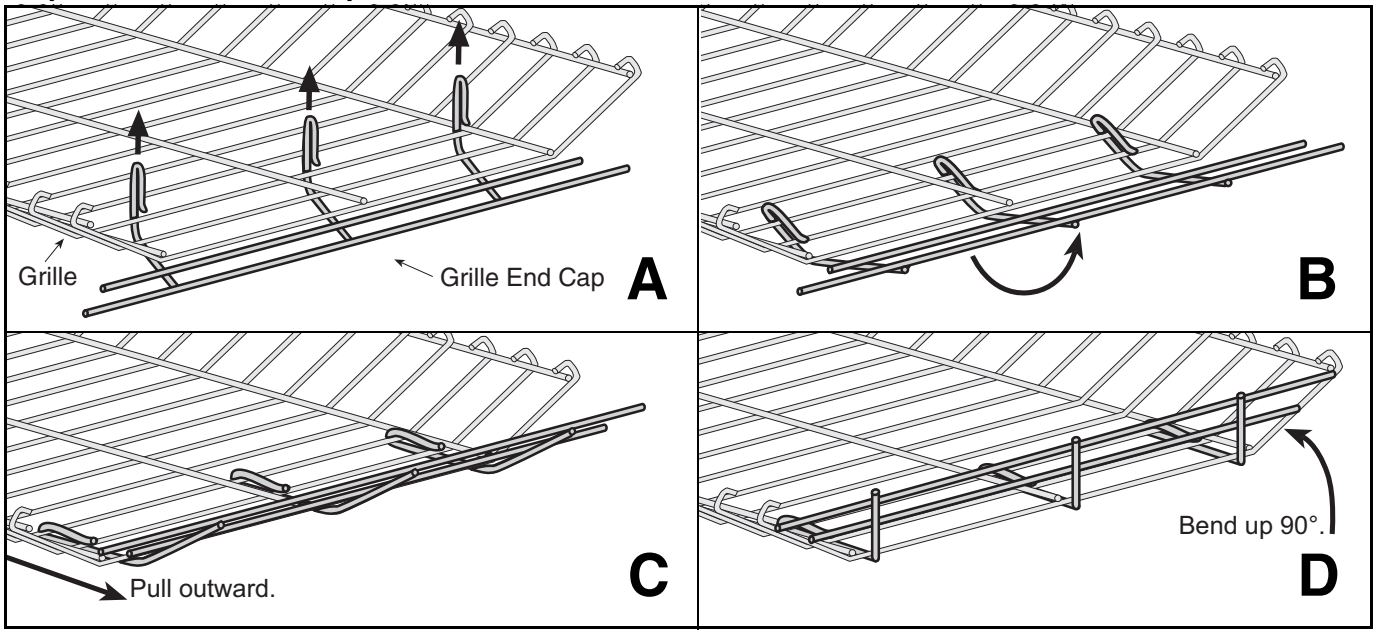

Step 10.4.3 Grille Installation

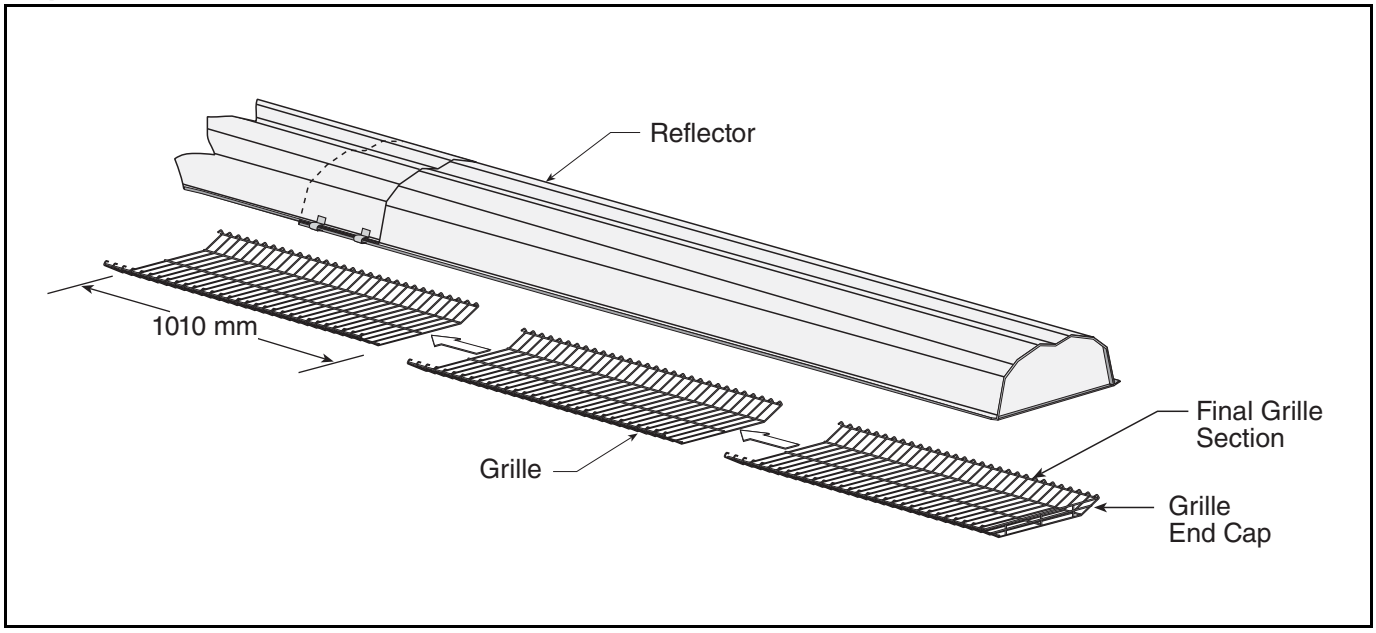

10.5 Sports Hall Guard Installation

Step 10.5.1 Grille Installation

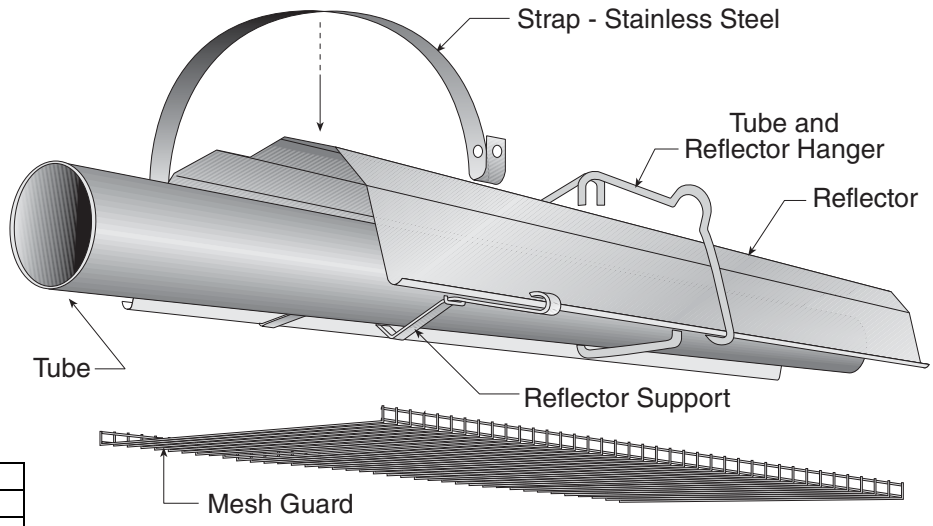

Description	Part Number
Mesh Guard 2438 mm	E0009855
Mesh Guard 1524 mm	C2329B
Strap Stainless Steel	S5218W

Step 10.5.2 Fastener Installation

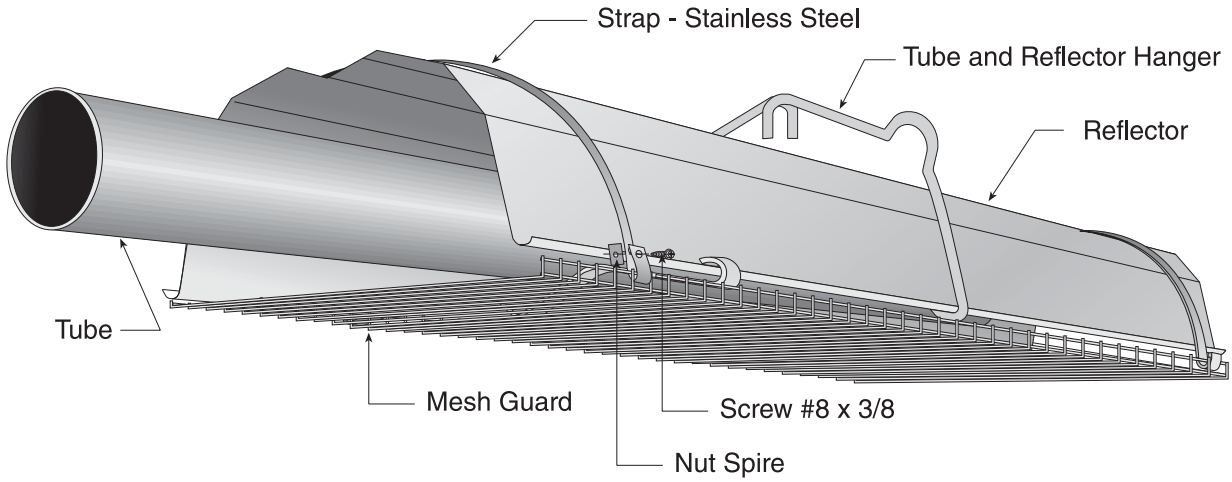

Description	Part Number
Nut Spire	C1088B
Screw #8 x 3/8	C1089B

Step 10.5.3 Mesh Guard Connection

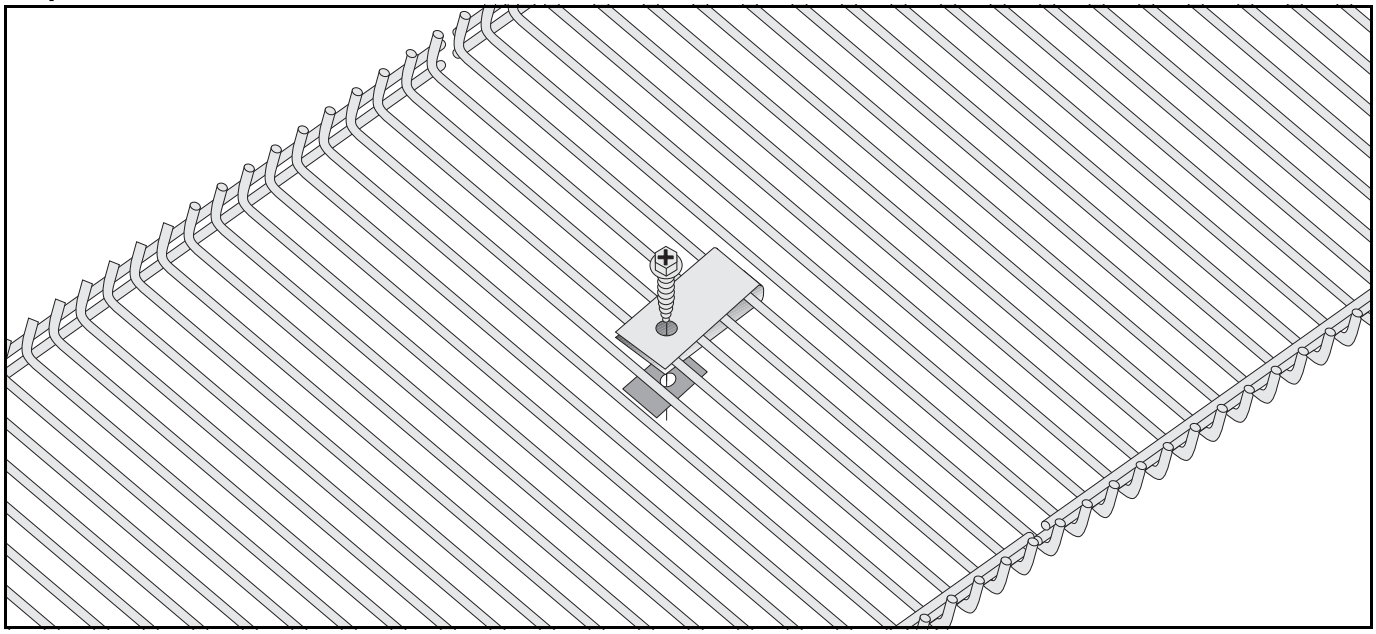

10.6 Undershield Installation

10.6.1 Hanger Installation

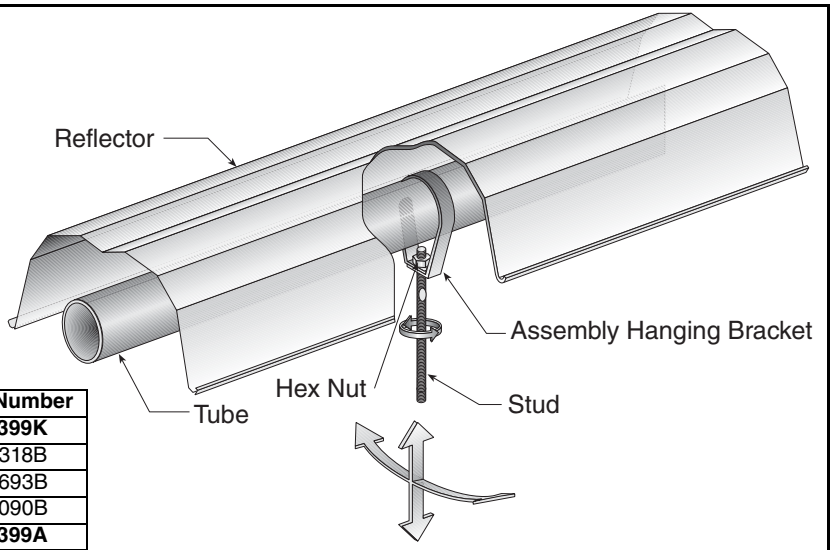

Description	Part Number
Undershield Reflector Package 1220 mm (4')	**S7399K**
Assembly Hanging Bracket	C0318B
Stud M6 x 90	C0693B
Nut M6	C0090B
Undershield Reflector Package 2438 mm (8')	**S7399A**
Assembly Hanging Bracket	C0318B
Stud M6 x 90	C0693B
Nut M6	C0090B

10.6.2 Undershield Installation

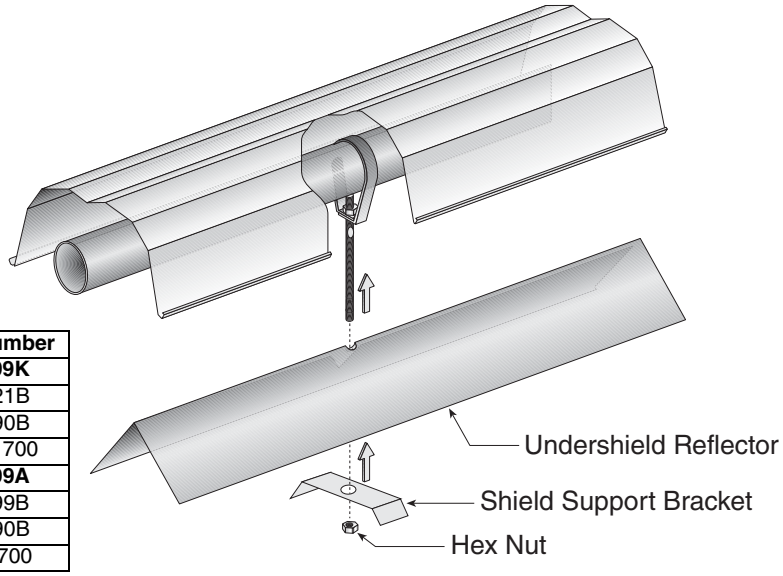

Description	Part Number
Undershield Reflector Package 1220 mm (4')	**S7399K**
Undershield Reflector 1219 mm	C0521B
Nut M6	C0090B
Shield Support Bracket	02751700
Undershield Reflector Package 2438 mm (8')	**S7399A**
Undershield reflector 2438 mm	R1299B
Nut M6	C0090B
Shield Support Bracket	0751700

10.6.3 Adjust Undershield Height

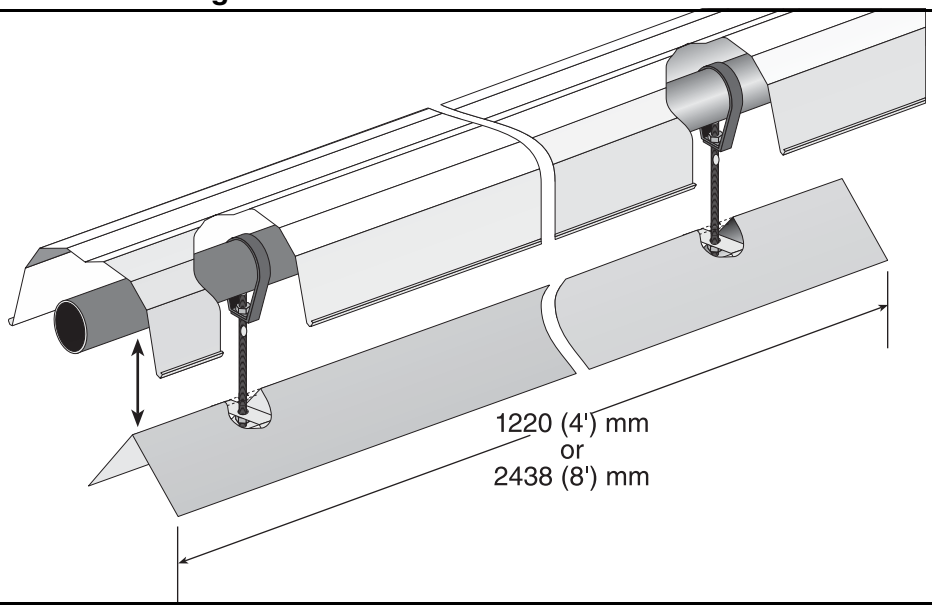

10.7 Wall Mounting

Install wall mounting brackets at the height shown in the layout drawing provided by the estimator. Space wall mounting brackets and hangers as indicated by dimensions d, e and f (u-tube) in the relevant layout overview drawing for your heater. For linear heaters *see Page 15, Figure 20*, for double linear heaters *see Page 18, Figure 22* and for U-tube heaters *see Page 28, Figure 24*.

10.7.1 Hardware Installation

The wall mounting brackets must be attached to a suitable wall through all mounting holes. Screw sizes less than M8 (5/16") may not be used. In order for the wall mounting brackets to adequately carry the weight of the heater, it must be installed with best building practice.

Model	Quantity of Wall Mounting Brackets	Model	Quantity of Wall Mounting Brackets
BH15UT	2	BH15ST	3
BH20UT	3	BH20ST	4
BH25UT/EF	3	BH25ST/EF	4
BH30UT/EF	3	BH30ST/EF	5
BH35UT/EF	3	BH35ST/EF	5
BH40UT/EF	3	BH40ST/EF	5
BH45UT/EF	4	BH45ST/EF	6
BH50UT/EF	4	BH50ST/EF	6

Figure 27: U-Tube (Horizontal)

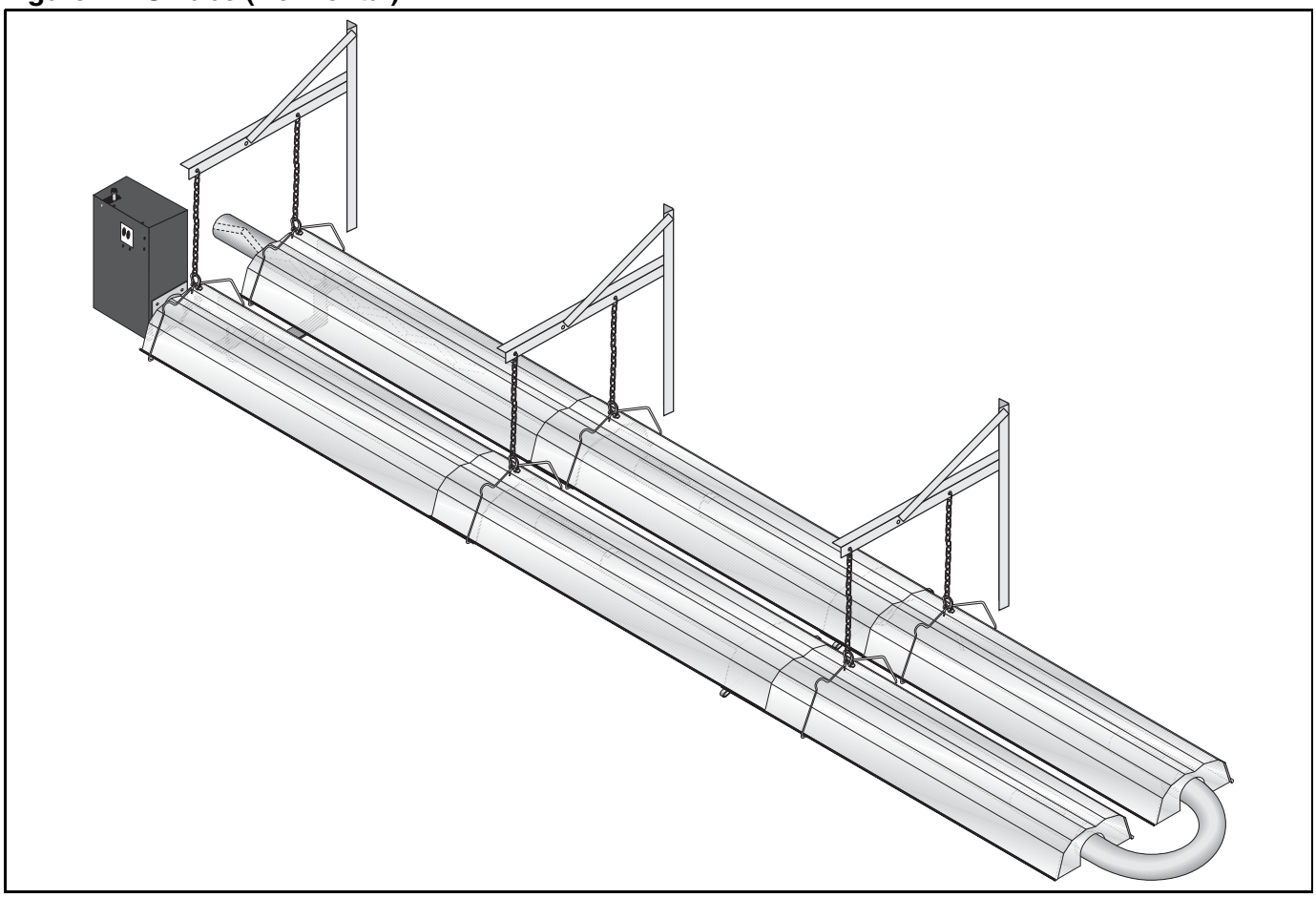

Figure 28: U-Tube (Angle Mounted)

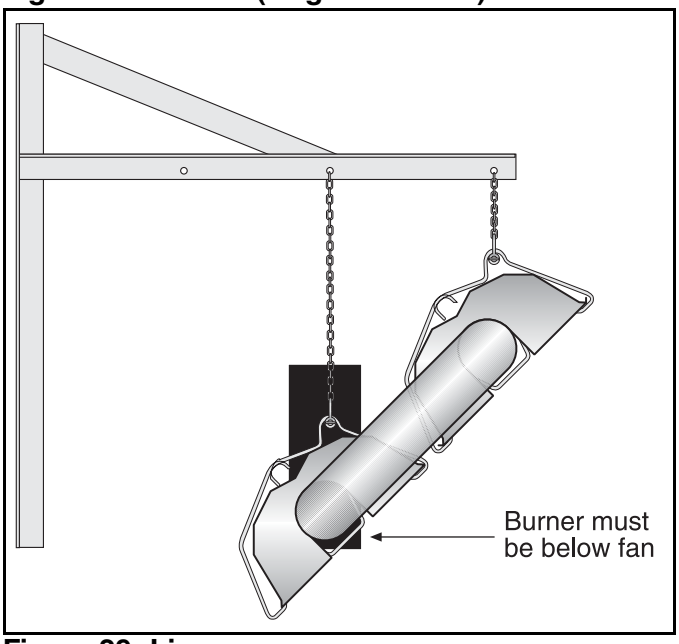

Figure 29: Linear

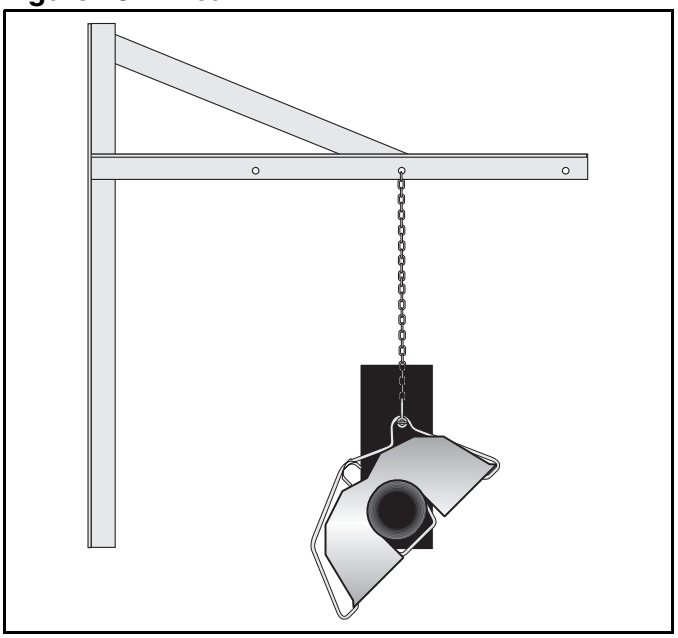

SECTION 11: VENTING

⚠WARNING

Carbon Monoxide Hazard

Multiburner systems are not approved for unvented use and must be vented outdoors.

Unitary heaters installed unvented must be interlocked with sufficient building exhaust.

Heaters must be installed according to the installation manual.

Failure to follow these instructions can result in death or injury.

⚠WARNING

Cut/Pinch Hazard

Wear protective gear during installation, operation and service.

Edges are sharp.

Failure to follow these instructions can result in injury.

11.1 General Venting Requirements

Flue materials are not included with the heater.

11.1.1 Type C_{12} , C_{32} & C_{62} Appliance

Room Sealed

The heaters are designed to be installed as room sealed appliances. The flue and air intake are run as separate pipes to the special concentric wall or roof terminal. The dust arrest baffle plate on the heater must be removed prior to installation. *See Page 52, Figure 33*.

11.1.2 Type B_{22} Appliance

The flue must be fitted with a low resistance terminal. *See Page 52, Figure 33*.

11.1.3 Flue Installation

The fan outlet may discharge vertically or horizontally. Connection should be made using 100 mm minimum diameter aluminium or stainless steel flue material to National Standard and must be adapted to insert into the 100 mm flue adapter. Both fresh air supply and flue duct shall not exceed 10,000 mm. BH15 and BH20 flue must be insulated if longer than 5,000 mm. BH25 flue must be insulated if longer than 8,000 mm. Contact the manufacturer if more than 2 x 45° offset bends are necessary. The flue must be self supporting.

Fans	Horizontal	Vertical
83 BWLG	190 x 75 (hole)	150 mm dia.
90 BWTL	190 x 75 (hole)	150 mm dia.

11.1.4 Flueless Installation

If the heater is being installed in an area where combustion products can be dissipated within the building, ensure that the fan outlet is horizontal and away from the burner. Where installation is close to a wall

(perimeter system) or other obstruction close to the fan outlet or wall angle mounted, install the heater so that the fan tube is the furthest away from the wall or obstruction, i.e. the fan will always blow into the building or away from the obstruction.

11.2 Ventilation Requirements

Detailed recommendations for air supply are given in the relevant National Standards. There must be an adequate supply of air for both combustion and general ventilation. Air vents should have negligible resistance. Do not locate air vents where they can be easily blocked or flooded, or adjacent to any flues or extraction systems carrying flammable vapour.

11.2.1 Flue Installation

For design air changes less than 0.5/h following requirements apply.

Type B heaters

For natural ventilation low level openings must be provided of at least 2 cm^2/kW input installed. For mechanical ventilation an air change rate of at least 0.5/h must be ensured.

Type C heaters

Room sealed heaters need no additional building ventilation.

11.2.2 Flueless Installation (EN 13410)

The installation room must have a volume of at least 10m^3/kW of installed nominal heat input. A minimum of 10m^3/h of exhaust air per kW of operating heat input must be ventilated out of the installation room by either thermal or mechanical evacuation. Appropriate exhaust and fresh air openings must be provided and exhaust fans interlocked with the operation of the heating equipment. Further no exhaust system is necessary if the building air change rate is greater than 1.5 per hour or the density of operating heat input is not greater than 5 W/m^3.

Figure 30: Individual Flue Connection Detail

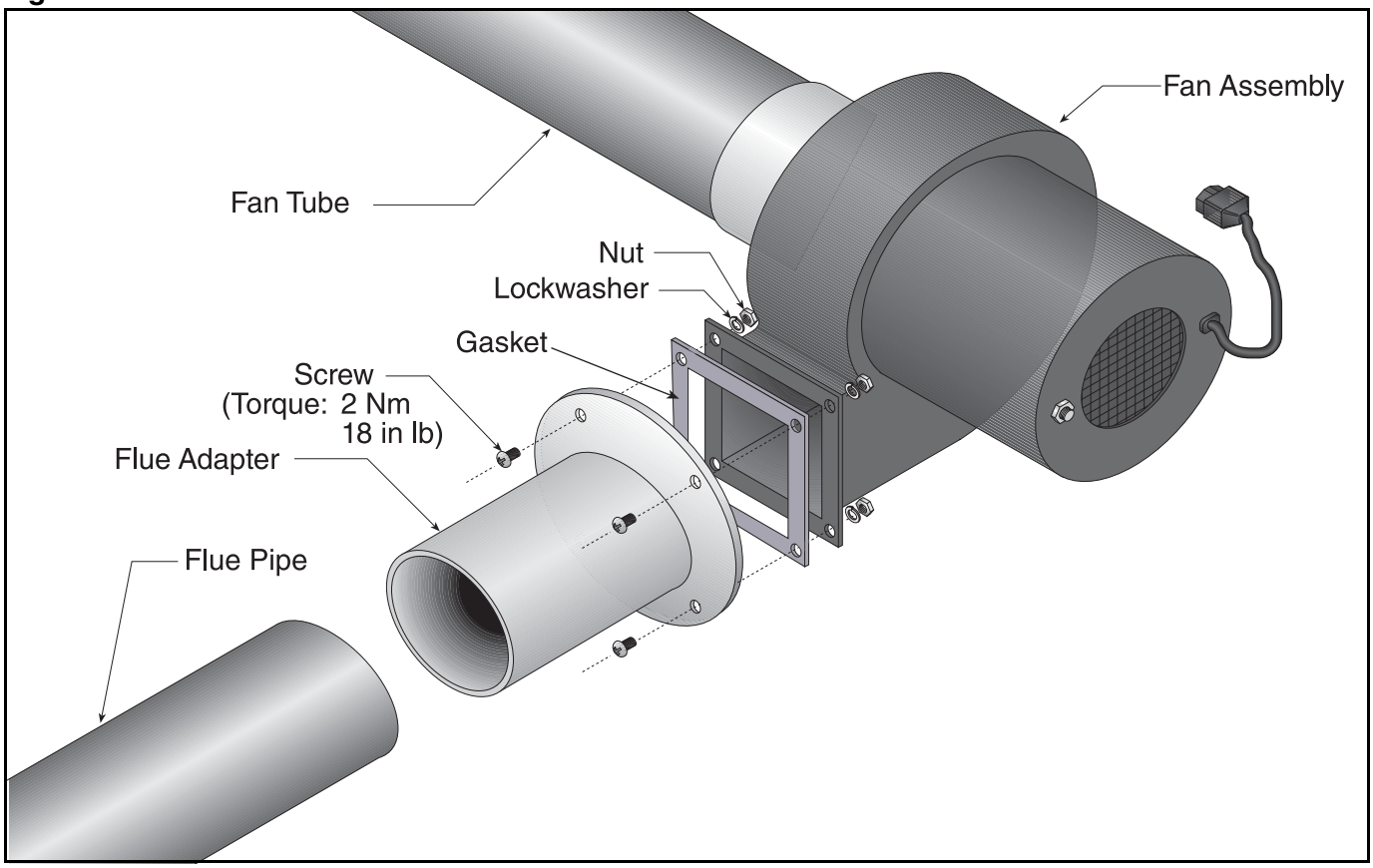

Figure 31: Flue Connection Dimensions

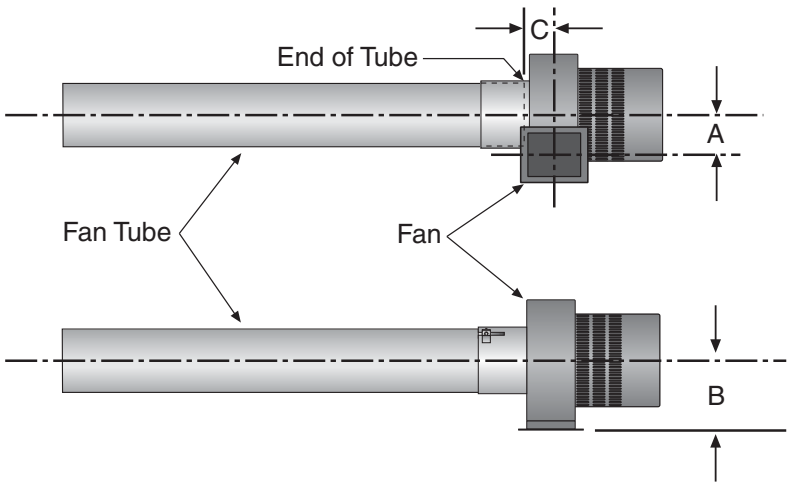

Fan Model	A	B	C
Torin DSF-133-42	79 mm	95 mm	45 mm
Torin DSA-524-202	86 mm	102 mm	51 mm
McMillan N1398A	89 mm	102 mm	51 mm

11.3 Outside Combustion Air Supply

Where necessary, clean air may be ducted into the burner box through an added spigot on the back of the burner box replacing the existing dust arrest baffle plate.

See Page 50, Section 11.1.3 for recommendations on duct length. Air duct should be as straight as possible. Do not use bends in excess of 45°. Consult the manufacturer if more than 2 x 45° offset bends are necessary. The fresh air duct must be self supporting.

11.3.1 Air Supply Requirements

When fresh air duct is used, follow one of these rules:

- The flue must penetrate the roof while fresh air can penetrate any wall. (*See Page 52, Figure 33*)
- The flue and fresh air supply must penetrate the same roof, at a minimum of 1 m apart. (*See Page 52, Figure 33*)
- The flue must penetrate 1 m higher than the fresh air inlet on the same wall. (*See Page 52, Figure 33*)

Figure 32: Fresh Air Intake Spigot

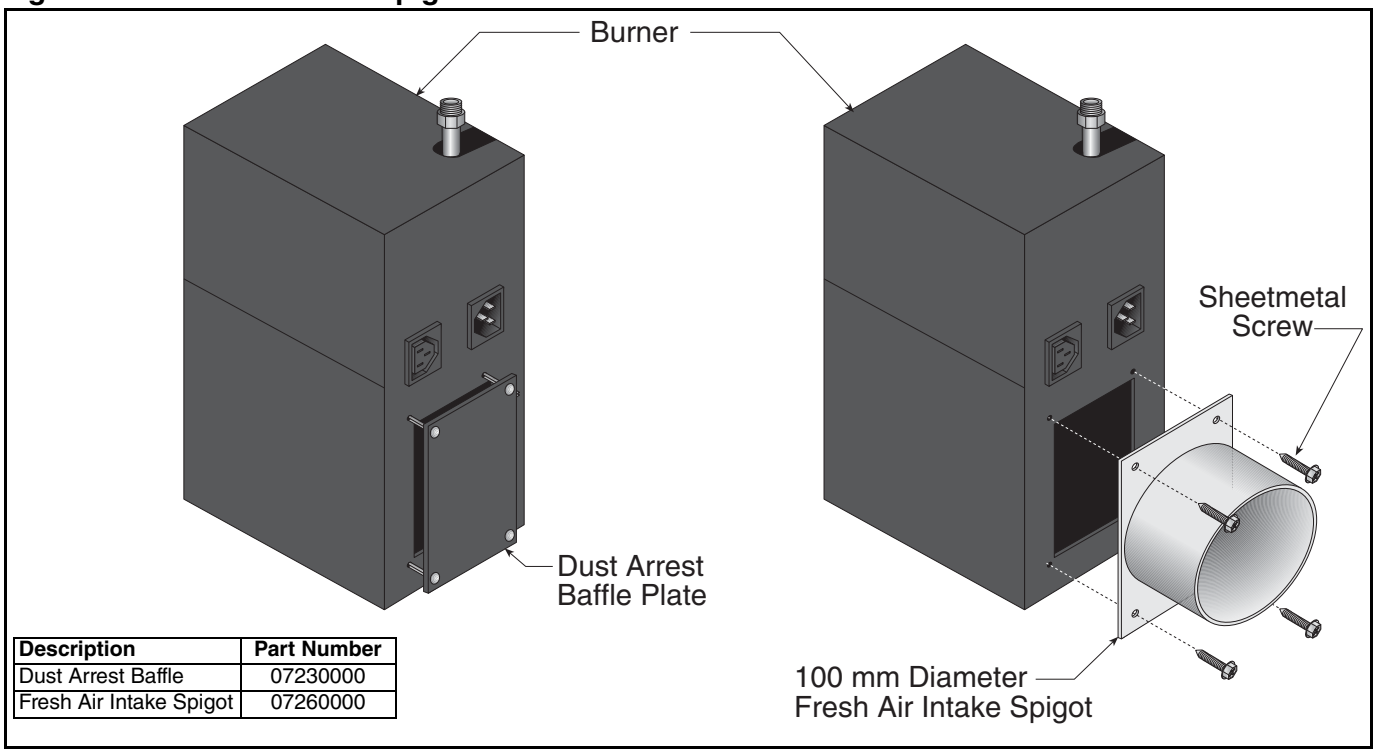

Description	Part Number
Dust Arrest Baffle	07230000
Fresh Air Intake Spigot	07260000

Figure 33: Air Supply with Flue Configurations

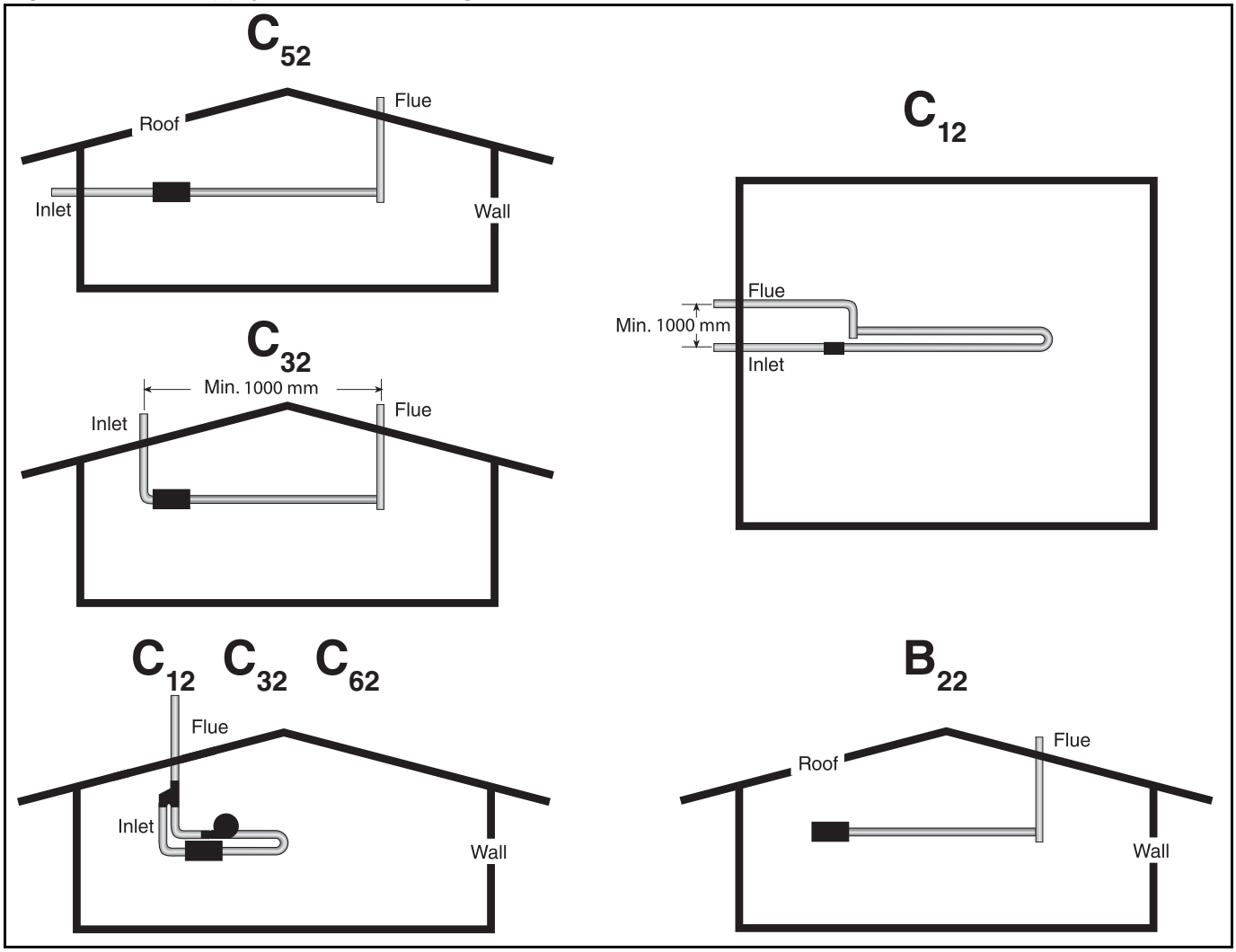

11.4 Common Duct

When using a common air inlet duct, always ensure that the area of the common air inlet duct represents the area of all air ducts.

SECTION 12: GAS PIPING

⚠WARNING

Fire Hazard

Tighten gas line fittings to connect gas supply according to Figure 34.

Flex gas line can crack when twisted.

Gas line moves during normal operation.

Use only 1000 mm long connector of 1/2" or 3/4" nominal ID.

Failure to follow these instructions can result in death, injury or property damage.

⚠WARNING

Explosion Hazard

Leak test all components of gas pipe work before operation.

Gas can leak if pipe work is not installed properly.

Do not high pressure test gas pipe work with heater connected.

Failure to follow these instructions can result in death, injury or property damage.

It is important that the gas supply pipe and electrical connections do not support any of the heater's weight.

Installation pipes should be fitted in accordance with National Standards. Pipe work from the meter to the heater(s) must be of adequate size. Pipes of smaller size than the heater inlet gas connection should not be used.

Install the gas hose as shown *on Page 54, Figure 34*. The gas hose accommodates expansion of the heating system and allows for easy installation and service of the burner. Before connecting the burners to the supply system, verify that all high pressure testing of the gas piping has been completed.

There is an expansion of the tube with each firing cycle. This will cause the burner to move with respect to the gas hose. This can cause a gas leak resulting in an unsafe condition if the gas connection is not made in strict accordance with *Figure 34*.

Meter and service must be large enough to handle all the burners being installed plus any other connected load. The gas hose which feeds the system must be large enough to supply the required gas with a maximum pressure drop of 13 mm wc. When gas piping is not included in the layout drawing, the local gas supplier will usually help in planning the gas piping.

IMPORTANT - the complete installation must be tested for gas soundness and be purged in accordance with local and national codes.

- **Check the pipe and tubing ends for leaks before placing heating equipment into service. When checking for gas leaks, use a soap and water solution; never use an open flame.**

Figure 34: Gas Connection with Stainless Steel Flex Connector

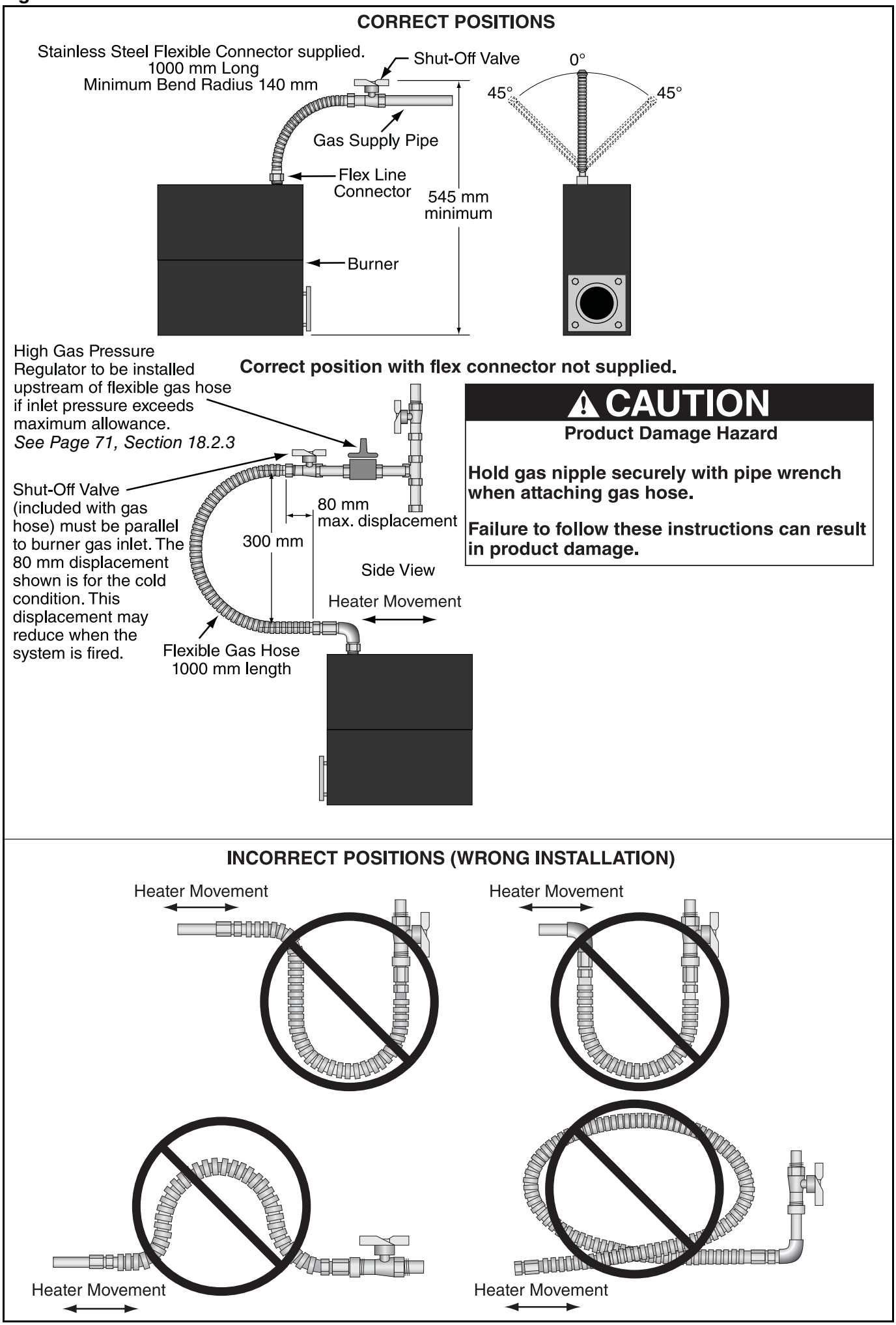

SECTION 13: WIRING

⚠ DANGER

Electrical Shock Hazard

Disconnect electric before service.

Heater must be properly grounded.

Failure to follow these instructions can result in death or electrical shock.

Connect to the electrical supply using a 3 pin plug via a locally mounted double pole fused switch having a minimum disconnection of 3 mm on each pole. This switch should be fused to 3 amps. The burner is fused at 2 amps. There are no control connections in the standard burner. Control is affected by interruption of the main power inlet. *See Page 55, Section 13.1 through Page 56, Section 13.4* for the external wiring details for the single-burner, double linear and multiburner heater systems.

All wiring must comply with current wiring regulations and any local regulations which may apply. Always switch off the supply to the burner and disconnect by removing the plug before removing the burner side panel.

For lockout indication, establish connection inside burner with grey wire and ignition module connection (CON 5 Pin 4).

13.1 Typical External Wiring Diagram (Linear or U-Tube)

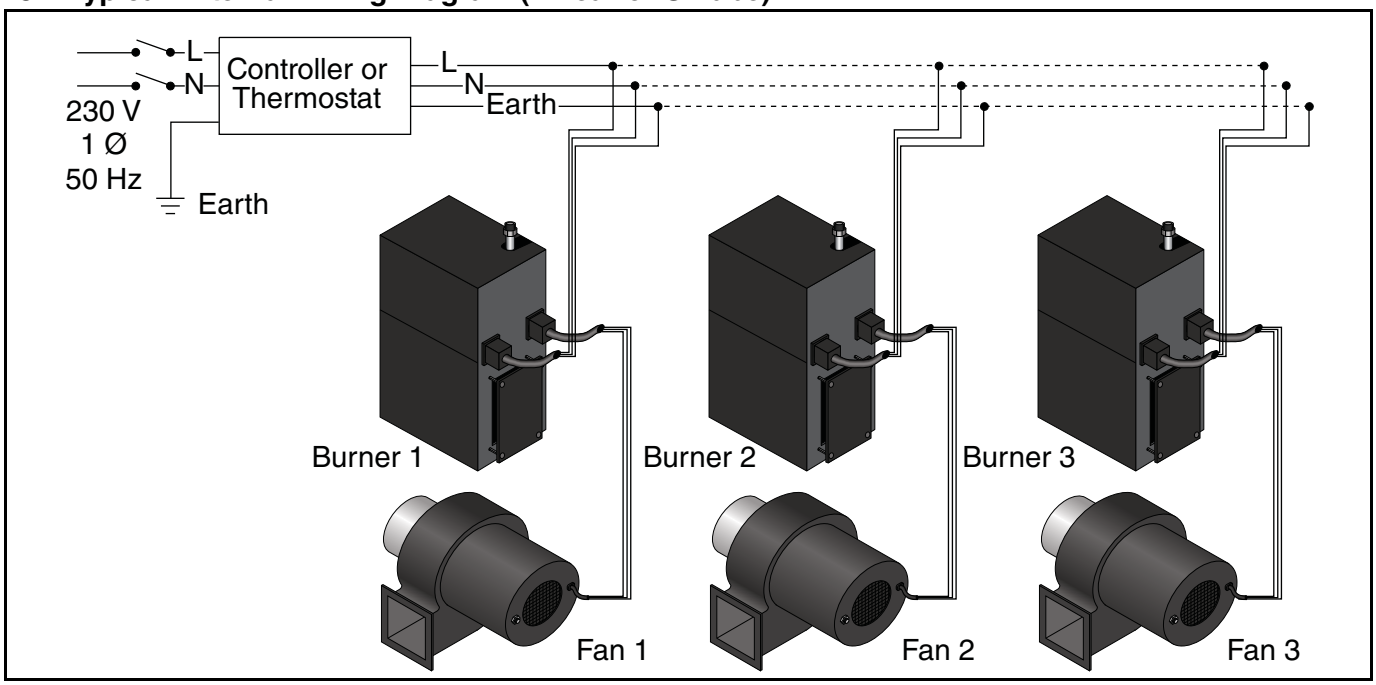

13.2 Typical External Wiring Diagram (Double Linear Option 1)

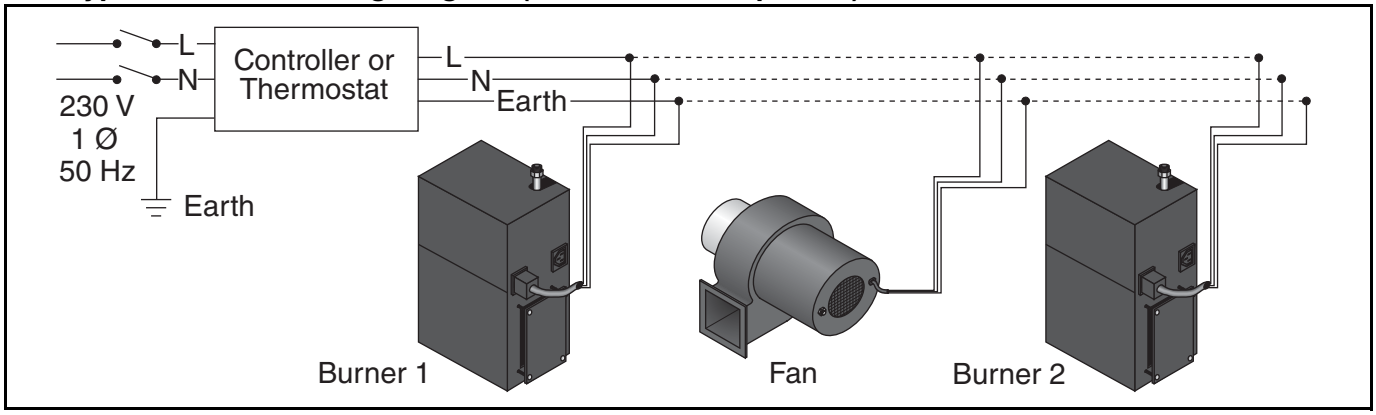

13.3 Typical External Wiring Diagram (Double Linear Option 2)

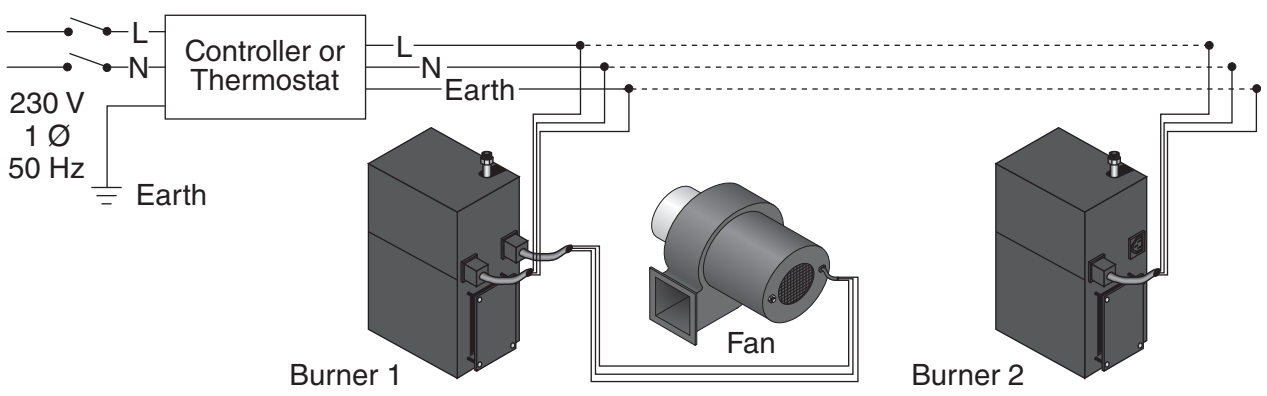

13.4 Typical External Wiring Diagram (Multiburner)

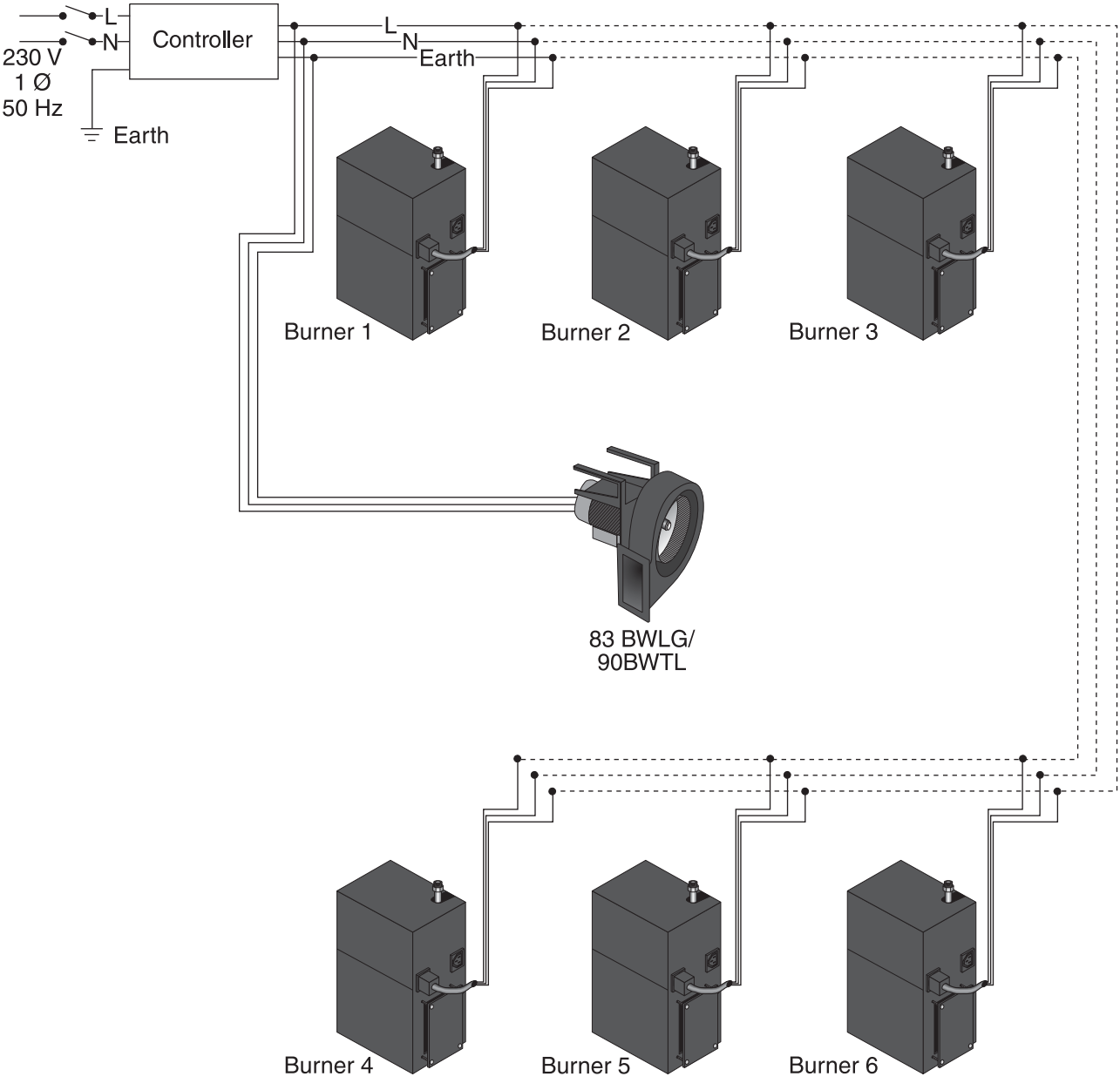

13.5 Internal Wiring Diagram

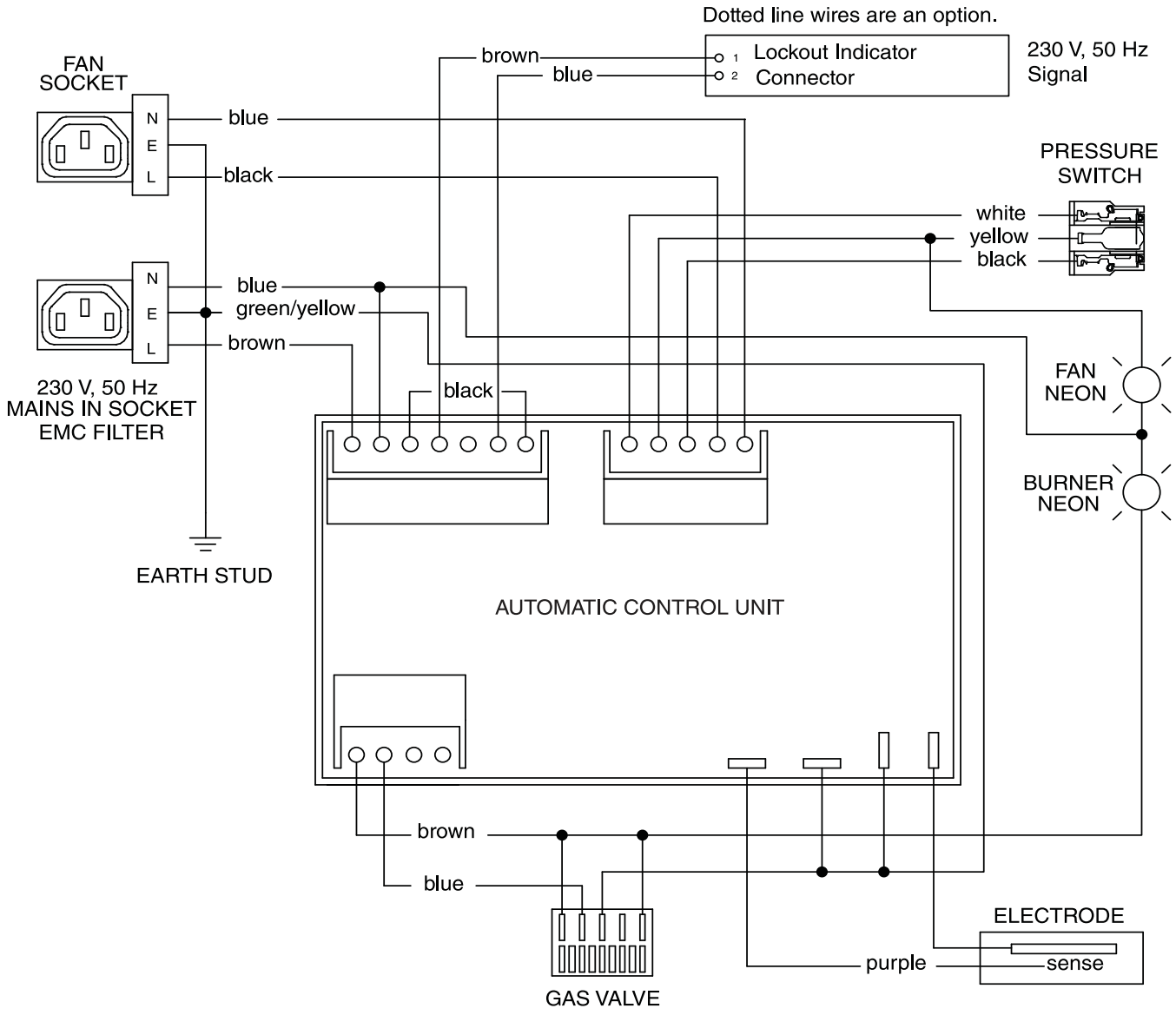

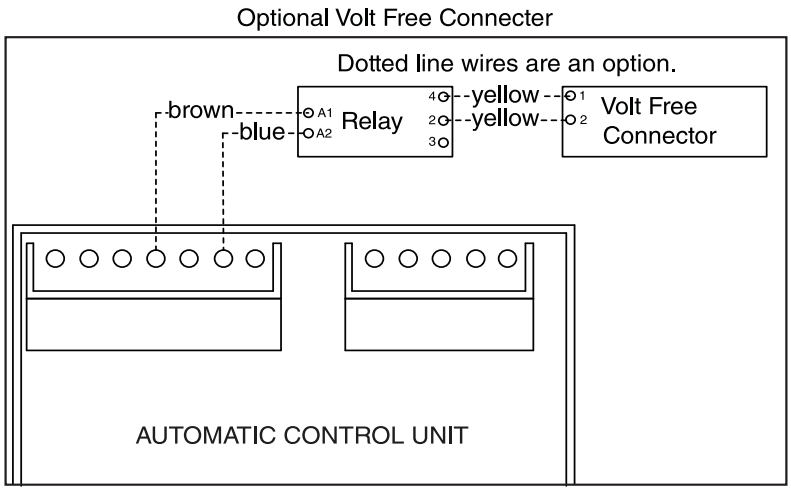

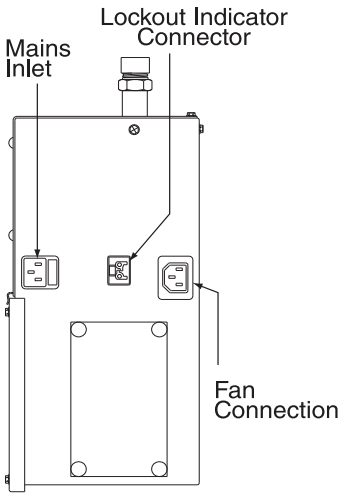

If any of the original wire as supplied with the heater must be replaced, it must be replaced with wiring material having a temperature rating of at least 105°C and 600 V.

SECTION 14: OPERATION

⚠ DANGER	⚠ WARNING		
Electrical Shock Hazard **Disconnect electric before service.** **More than one disconnect switch may be required to disconnect electric from heater.** **Heater must be connected to a properly grounded electrical source.**	**Explosion Hazard** **Turn off gas supply to heater before service.**	**Burn Hazard** **Allow heater to cool before service.** **Tubing may still be hot after operation.**	**Cut/Pinch Hazard** **Wear protective gear during installation, operation and service.** **Edges are sharp.**
Failure to follow these instructions can result in death, electric shock, injury or property damage.			

Figure 35: Sequence of Operation Chart

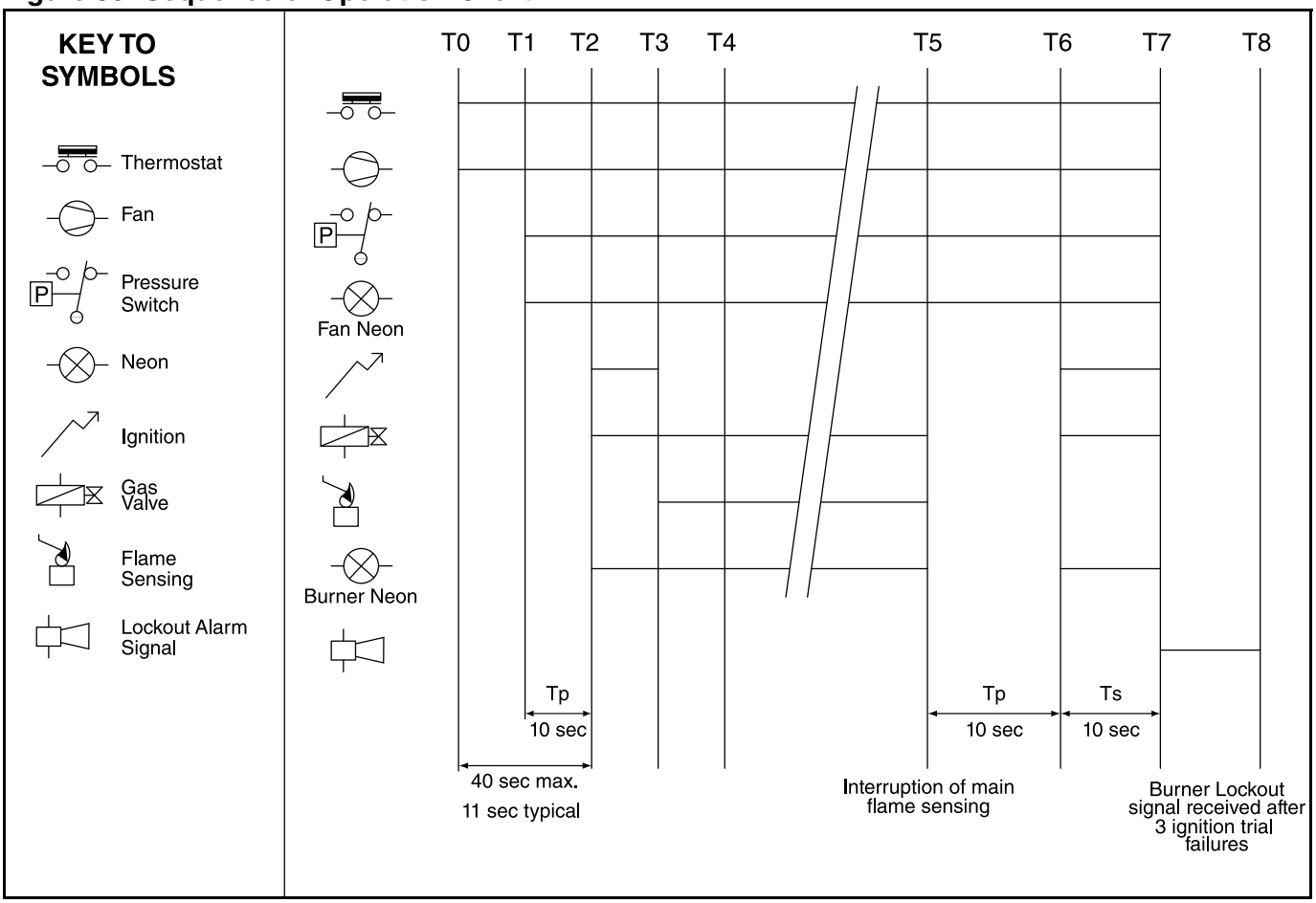

NOTE: If the heater operates for more than 24 hours continuously, the ignition module will automatically recycle the burner to ensure that all safety functions are still in working condition.

14.1 Heater Lockout Indication

In case of flame loss during operation of the heater, the burner control unit goes to lockout mode after three ignition trials. At this stage a signal or closed relay will enable the ROBERTS GORDON® controller, BMS system, etc. to indicate precisely which heater has failed. This can be done by two options.

14.1.1 Heater Lockout Indicator by Connector

A 230 V signal is provided which enables the ROBERTS GORDON® controller, BMS system, etc. to indicate the heater that has failed. An additional wire has to be installed from the heater lockout indicator connector to the monitoring computer. *See Page 57, Section 13.5*.

14.1.2 Heater Lockout Indicator by Volt Free Connector (Optional)

A volt free contact relay is closed which enables the ROBERTS GORDON® controller, BMS system, etc. to indicate the heater that has failed. An additional wire has to be installed from the heater volt free connector to the monitoring computer. *See Page 57, Section 13.5*.

Description	Part Number
Connector male - Volt Free	91324000
Connector female - Volt Free	91324001
Wire Blue 7"	91300004
Wire Brown 7"	91300005
Wire Yellow 12"	91300003
Screw #8 x 3/8 Hex Wshr PHH Type 23	94961406
Base relay P2RF05E	C1050B
Relay G2R1-SN IMO 220 V 10 A	C1049B

14.2 Testing

Establish that a satisfactory purged gas supply and an electrical supply is available to the heater. Ensure that all time clocks and thermostats are set to call for heat.

With the gas supply cut off at the appliance isolating cock and the electrical supply isolated by switching off at the local switch and removing the appliance inlet plug, open the control chamber secured by the two screws. Loosen the sealing screw from the pressure test point and remove the cover cap from the governor.

Turn on the gas supply and connect appliance electrical plug. Ensure that the timer or thermostat, if fitted, are set to call for full gas rate. Switch on at the local switch. The sequence as described should take place. If not, refer to detailed fault finding sequence. When flame is established, check the gas pressure reading and adjust if necessary. Refer to burner data label.

Check the gas pressure at the outlet of the gas valve. *See Page 73, Section 18.10.1* or *See Page 74, Section 18.10.2* for pressure settings or refer to the data plate.

Switch off the electrical supply (shutting down the heater), remove pressure gauge - tighten pressure test point screw, ensuring a tight gas seal. Replace governor cover cap. Close burner side cover.

14.3 Commissioning (Multiburner)

1. Establish that a satisfactory purged gas supply and an electrical supply is available to the heater.

2. ENSURE that all the dampers are in the fully open position.

3. With the gas supply off at each of the burners and the electrical supply isolated, open the control chamber secured by two self tapping screws.

4. Ensure that all time clocks and thermostats are set to call for heat.

5. Switch on the electrical supply at the main isolator. This will start the exhaust fan.

6. **Balancing Cold Vacuum**
   Check each burner vacuum by connecting an inclined pressure gauge to the tee on the pressure switch inlet side in the burner. Adjust the damper so that the vacuum is 1.9 mbar. Repeat for each burner.

7. Starting at the end burner (furthest from the exhaust fan), with the inclined pressure gauge connected as described above. Turn on the gas supply and connect appliance electrical plug, reset the pressure switch by removing vacuum from the inlet side of the pressure switch waiting several seconds and reconnecting. The start up sequence described on *Page 58, Section 14* should take place. If not, refer to detailed fault finding sequence. When flame is established, check the gas pressure reading and adjust if necessary. See data label.
   Check the gas pressure at the outlet of the gas valve. *See Page 73, Section 18.10.1* or *See Page 74, Section 18.10.2* for pressure settings or refer to the data plate.
   Switch off the electrical supply (shutting down the heater), remove pressure gauge - refit pressure test-point screw, ensuring a tight gas seal. Replace governor cover cap.
   Repeat this procedure for each burner in the system.
   Close the control chamber and secure with two sheet metal screws.

8. **Balancing Hot Vacuum**
   Reconnect all the burners on the system and allow them to reach full operating temperature (approximately 20 minutes). Return to each burner and recheck the hot vacuum at the tee on the inlet to the pressure switch. Readjust the damper so that the hot vacuum of 1.5 mbar (2.0 mbar for BH40EF) is achieved and lock the damper in position.

14.4 System Checks

Switch on again at the local switch to ensure smooth ignition. Carry out the following system checks:

When running, turn off the gas supply at the appliance. The heater will immediately shut down followed by three ignition attempts followed by lockout.

Linear and Double Linear only:

When running, disconnect the fan plug from the burner. The unit should shut down within three seconds, proving operation of the pressure switch.

14.5 User Instructions

After satisfactory testing, ensure that the client is fully aware of the operation of the system. Bring this manual to the attention of the user or purchaser; instruct them in the safe operation of the heater(s). Advise the user that if the system is unflued, any reduction in the natural ventilation of the building may require a flue to be fitted, or additional ventilation grilles will be required.

SECTION 15: SERVICING INSTRUCTIONS

⚠ DANGER	⚠ WARNING		
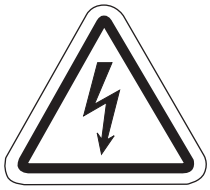			
Electrical Shock Hazard **Disconnect electric before service.** **More than one disconnect switch may be required to disconnect electric from heater.** **Heater must be connected to a properly grounded electrical source.**	**Explosion Hazard** **Turn off gas supply to heater before service.**	**Burn Hazard** **Allow heater to cool before service.** **Tubing may still be hot after operation.**	**Cut/Pinch Hazard** **Wear protective gear during installation, operation and service.** **Edges are sharp.**
Failure to follow these instructions can result in death, electric shock, injury or property damage.			

IMPORTANT: Never use the heater as a support for ladders or other access equipment. Always test for gas soundness with a suitable detection fluid after completing any servicing or exchange of gas carrying component. On completion of any service/fault finding tasks which require the breaking and remaking of electrical connections, the checks:- A:Earth Continuity, B:Polarity and C:Resistance to Earth must then be repeated.

15.1 Annual Procedure

Carry out the following procedure annually. The preferred time would be immediately before the winter heating period. If very dirty conditions arise, it may be necessary to carry out this procedure more often. If the unit takes in air through an air duct or filter assembly, more frequent service may be necessary.

15.1.1 Burner and Fan Removal

Isolate the heater from the gas and electrical supplies. Remove the fan plug from the burner. Unscrew the securing screws on the burner flange. The burner can now be removed. Take care not to disturb the gasket on the flanged burner tube. Unscrew the securing screw on the fan flange spigot. The fan can now be removed.

15.1.2 Burner and Fan Removal Maintenance

Remove the fan and burner independently to floor level and clean both items internally using a soft brush and compressed air, if available. Take care not to damage the internal parts of the burner. Check fan impeller for cleanliness and free rotation.

The electrodes are an integral part of the burner. To check spark gap, remove the securing screws on the electrode and withdraw it ensuring the gasket is not damaged. Spark gap on electrode should be approximately 3 mm.

15.1.3 Tube and Reflector Maintenance

With burner and fan removed, clean the outer surfaces of the tubes using a brush and wipe the inner surface of the reflector with a soft damp cloth - use a household detergent if necessary. Never use abrasive cleaners on the reflectors. Reassemble the burner and fan in reverse order. Carry out the Testing Procedure. *See Page 59, Section 14.2*.

15.2 Component Removal

First, isolate the heater from the gas and electrical supplies. Entry to the burner assembly is gained by removing the door screws and opening the hinged side cover. Entry to the combustion chamber is gained by removing the combustion chamber cover.

15.2.1 Electrode

Figure 36: Burner Cup Position

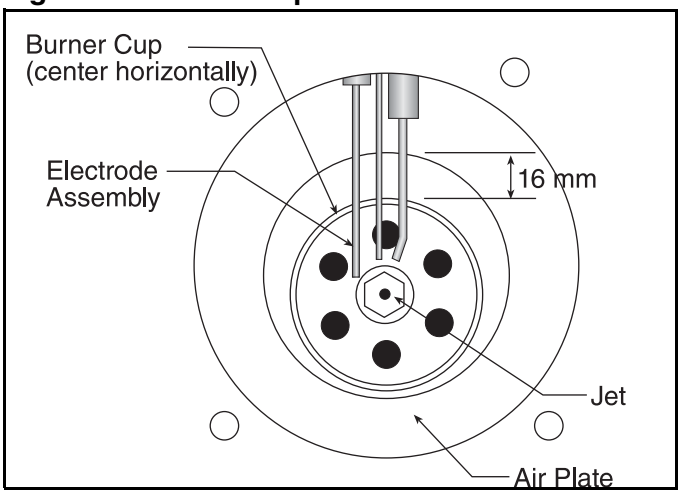

15.2.2 Burner Head/Injector Jet

When the cover is removed completely, the burner assembly is exposed. Unscrew the burner cup. Remove brass injector jet (orifice). Replace in reverse sequence.

15.2.3 Solenoid Valve/Governor

Remove burner head. Remove screws securing the solenoid/governor body bracket. Withdraw the four wires between the solenoids. The solenoid/governor and fittings can now be withdrawn from the compartment. The solenoid(s) can be removed from the body by unscrewing central screw. Replace in reverse sequence. Note: Earth is green/yellow.

15.2.4 Automatic Flame Control Unit

Remove black ignition lead. Withdraw the connectors. Remove two screws from the cover. Replace if faulty. Refit in reverse sequence.

15.2.5 Pressure Switch

Disconnect the two silicone tubes. Remove wires from the three blades. Remove two screws which secure the pressure switch to the burner. Remove pressure switch. Replace pressure switch, if faulty, and refit in reverse sequence ensuring that the rubber tubes are reconnected to the switch correctly.

Note: Wires fitted as follows:

NO - Yellow

NC - White

Common - Black

15.2.6 Neons

Remove the two push on connectors and remove the neons by pushing downwards. Replace in reverse sequence.

15.3 Maintenance Checklist

Installation Code and Annual Inspections:

All installation and service of ROBERTS GORDON® equipment must be performed by a contractor qualified in the installation and service of equipment sold and supplied by Roberts-Gordon Europe Limited and conform to all requirements set forth in the ROBERTS GORDON® manuals and all applicable governmental authorities pertaining to the installation, service, operation and labeling of the equipment. To help facilitate optimum performance and safety, Roberts-Gordon Europe Limited recommends that a qualified contractor conduct, at a minimum, annual inspections of your ROBERTS GORDON® equipment and perform service where necessary, using only replacement parts sold and supplied by Roberts-Gordon Europe Limited.

The Vicinity of the Heater	Do not store or use flammable objects, liquids or vapours near the heater. Immediately remove these items if they are present. *See Page 5, Section 3*.
Vehicles and Other Objects	Maintain the clearances to combustibles. Do not hang anything from, or place anything on, the heater. Make sure nothing is lodged underneath the reflector, in between the tubes or in the decorative or protective grilles (included with select models). Immediately remove objects in violation of the clearances to combustibles. *See Page 5, Section 3*.
Reflector	Support reflector with hanger and support strap. Reflector must not touch tube. Make sure there is no dirt, sagging, cracking or distortion. Do not operate if there is sagging, cracking or distortion. Make sure reflectors are correctly overlapped. *See Page 23, Section 6.6.1. or Page 34, Section 7.8.1*. Clean outside surface with a damp cloth.
Vent Pipe	Venting must be intact. Using a flashlight, look for obstructions, cracks on the pipe, gaps in the sealed areas or corrosion. The area must be free of dirt and dust. Remove any carbon deposits or scale using a wire brush. *See Page 50, Section 11*.
Outside Air Inlet	Inlet must be intact. Look for obstructions, cracks on the pipe, gaps in the sealed areas or corrosion. The area must be free of dirt and dust. Clean and reinstall as required.

Tubes	Make sure there are no cracks. Make sure tubes are connected and suspended securely. *See Page 11, Section 5*. Make sure there is no sagging, bending or distortion.
Gas Line	Check for gas leaks. *See Page 53, Section 12*.
Burner Observation Window	Make sure it is clean and free of cracks or holes. Clean and replace as required.
Blower Scroll, Wheel and Motor	Compressed air or a vacuum cleaner may be used to clean dust and dirt.
Burner Cup and Orifice	Clear of obstructions (even spider webs will cause problems). Carefully remove any dust and debris from the burner.
Electrode	Replace if there are cracked ceramics, excessive carbon residue, or erosion of the electrode. The electrode gap should be 3 mm.
Thermostat	There should be no exposed wire or damage to the thermostat. *See Page 55, Section 13*.
Suspension Points	Make sure the heater is hanging securely. Look for signs of wear on the chain or ceiling. *See Page 11, Section 5*.
Sports Hall Guard, Decorative and Protective Grilles (optional)	The grille must be securely attached. If the grille is loose or off, contact a contractor qualified in the installation and service of gas-fired heating equipment for repair. Check that side reflector extensions are installed correctly and secured in place if necessary (decorative grille only). *See Page 42, Section 10.1 and Page 45, Section 10.4*. Make sure shield is installed correctly and secured in place if necessary. (Decorative grille only.) *See Page 44, Section 10.3.2*.
Wall Tag	If a wall tag is present, make sure it is legible and accurate. Please contact Roberts-Gordon Europe Limited or your ROBERTS GORDON® independent distributor if you need a wall tag. *See Page 4, Section 2.1*.
Safety Labels	Product safety signs or labels should be replaced by the product user when they are no longer legible. Please contact Roberts-Gordon Europe Limited or your ROBERTS GORDON® independent distributor to obtain replacement signs or labels. *See Page 2, Figure 1 through Page 3, Figure 2*.

SECTION 16: TROUBLESHOOTING

⚠ DANGER

Electrical Shock Hazard

Disconnect electric before service.

Heater must be properly grounded.

Failure to follow these instructions can result in death or electrical shock.

⚠ WARNING

Fire Hazard	**Explosion Hazard**	**Burn Hazard**	**Cut/Pinch Hazard**
Keep all flammable objects, liquids and vapors the minimum required clearances to combustibles away from heater. **Some objects will catch fire or explode when placed close to heater.**	**Turn off gas supply to heater before service.**	**Allow heater to cool before service.** **Tubing may still be hot after operation.**	**Wear protective gear during installation, operation and service.** **Edges are sharp.**

Failure to follow these instructions can result in death, injury or property damage.

16.1 Troubleshooting Flow Chart (Linear, Double Linear and U-Tube)

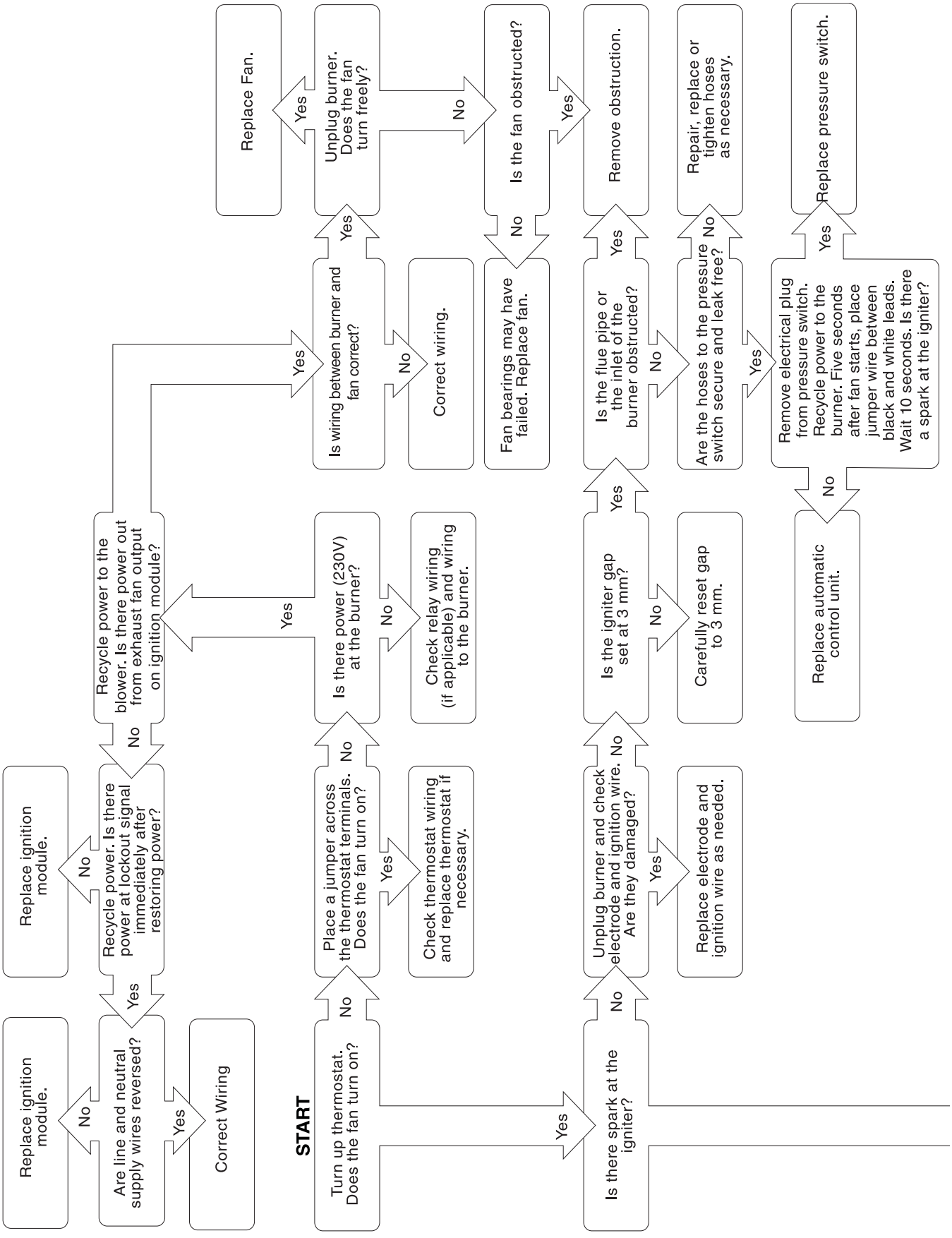

Troubleshooting Flow Chart (Linear, Double Linear and U-Tube)

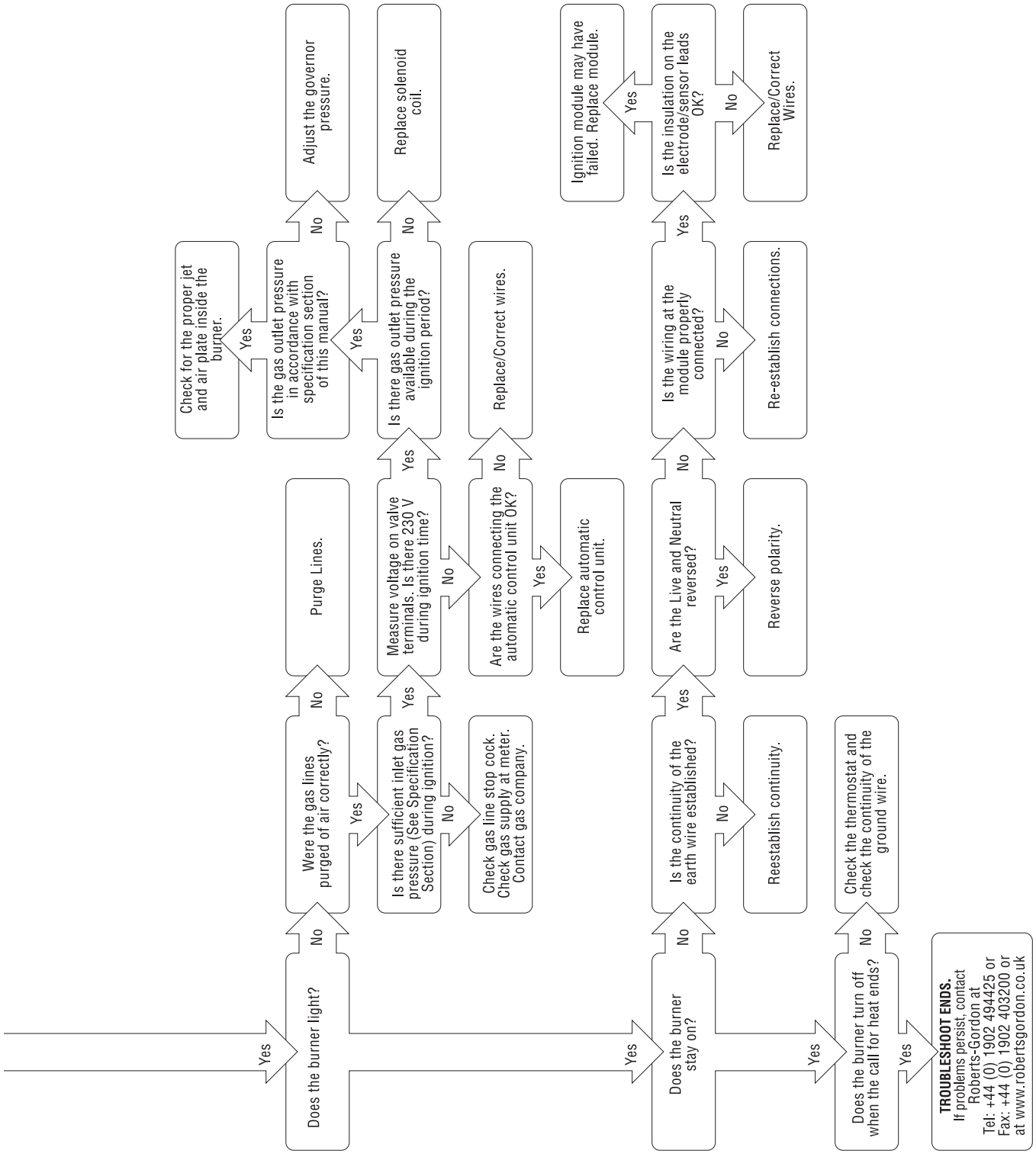

16.2 Troubleshooting Flow Chart (Multiburner)

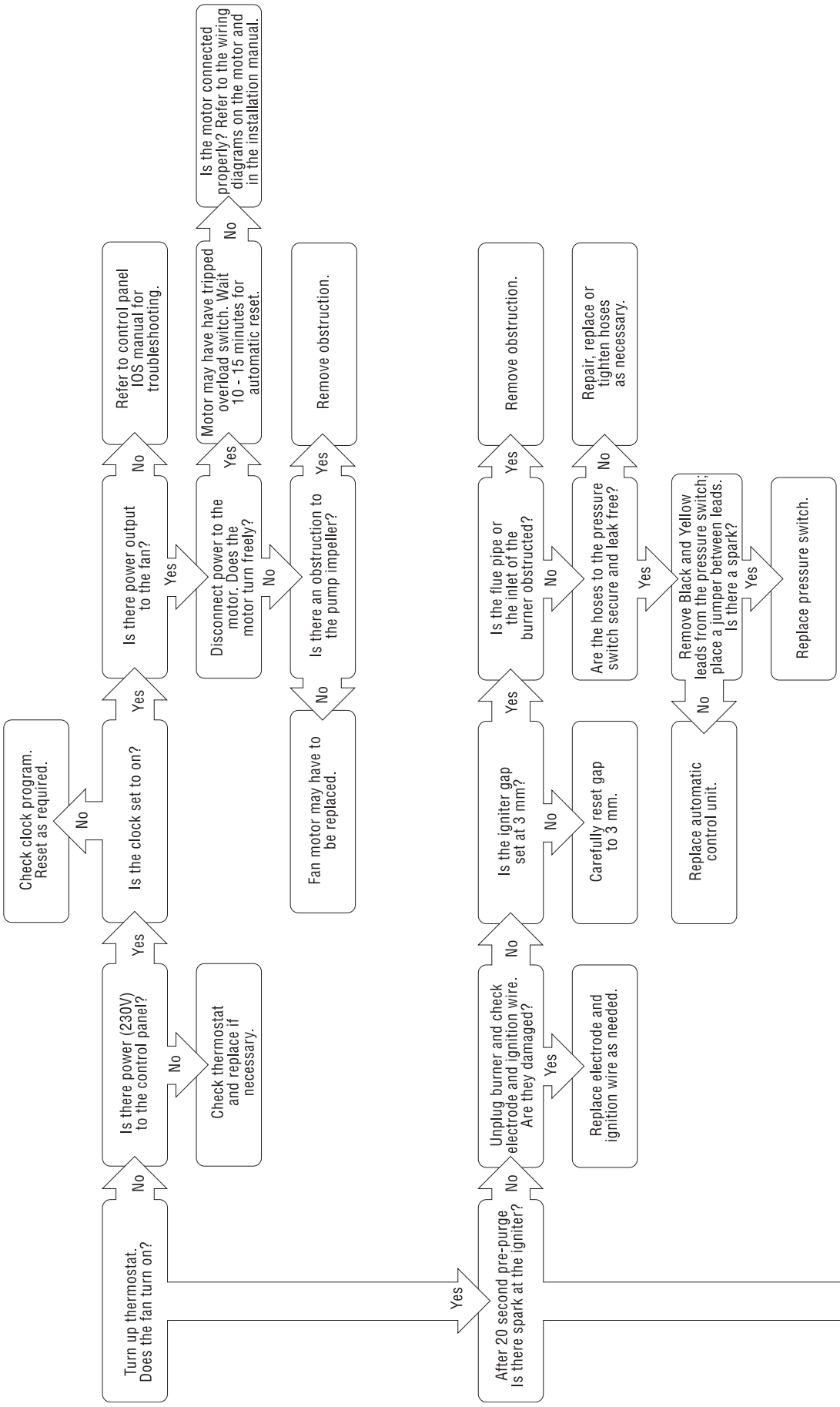

Troubleshooting Flow Chart (Multiburner)

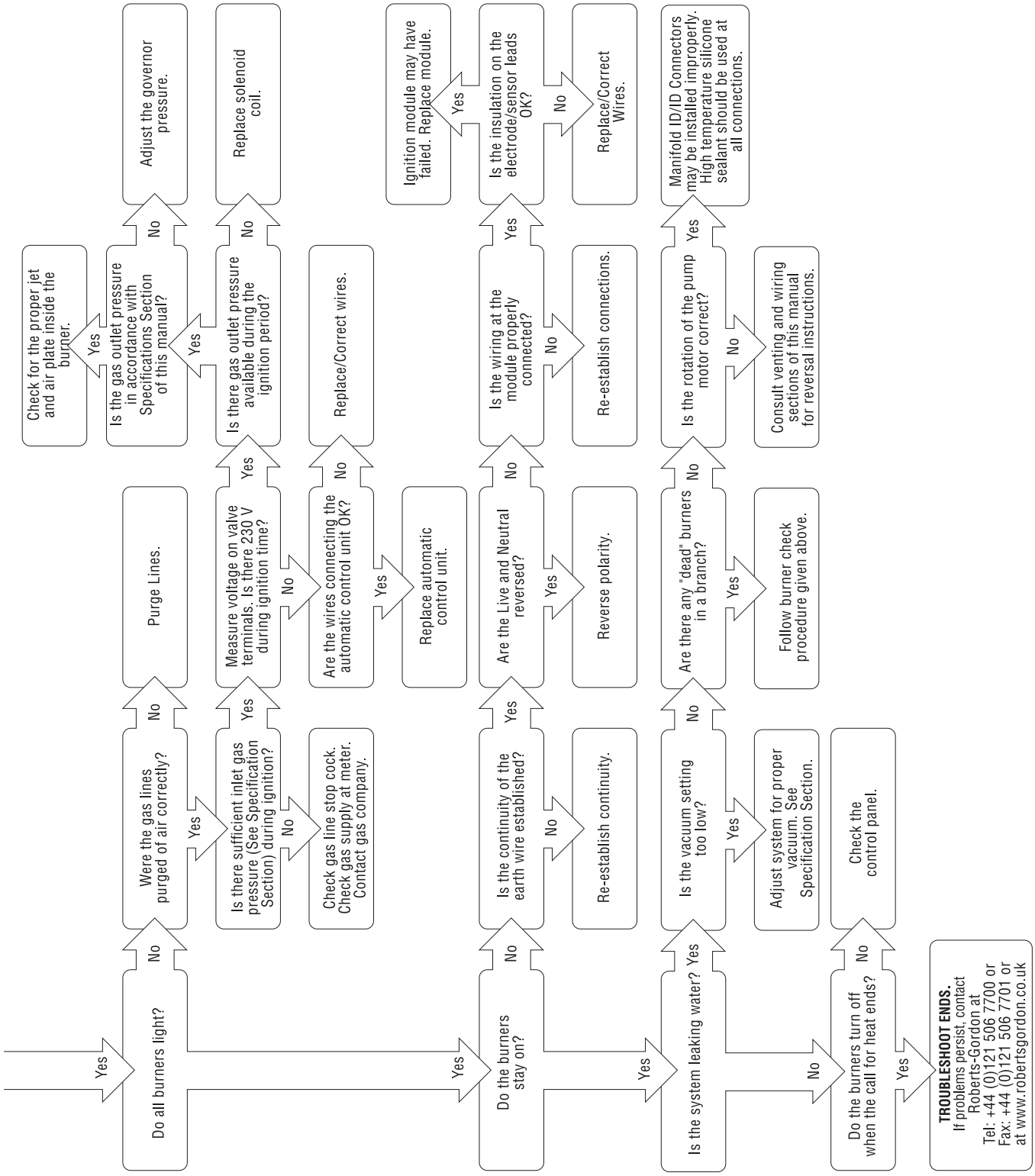

16.3 Manifold Gas Pressure Setting

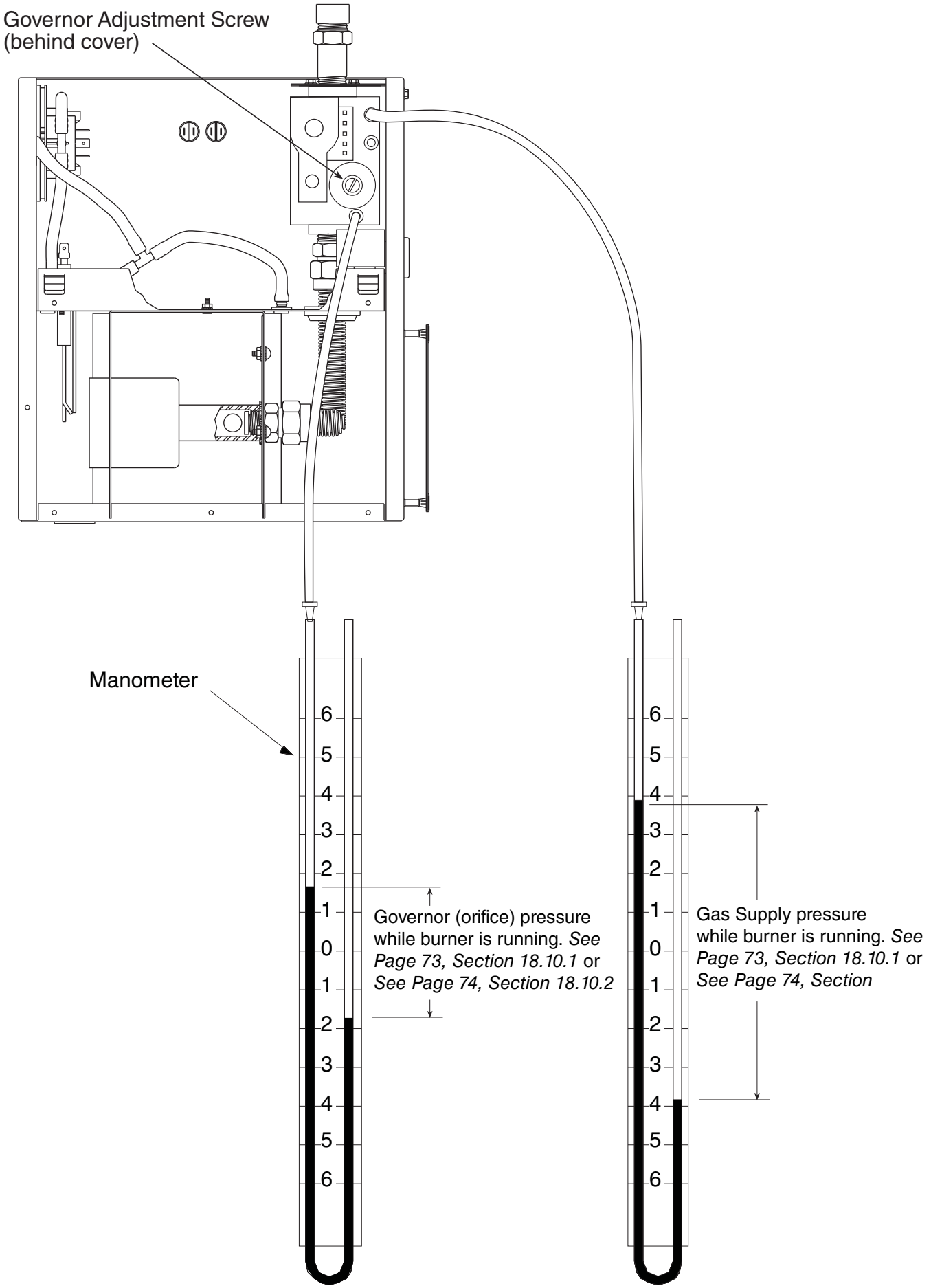

SECTION 17: REPLACEMENT PARTS

⚠ DANGER	⚠ WARNING		
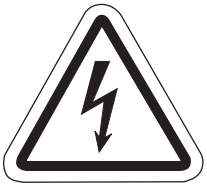			
Electrical Shock Hazard	**Explosion Hazard**	**Fire Hazard**	**Carbon Monoxide Hazard**

Use only genuine ROBERTS GORDON® replacement parts per this installation, operation and service manual.

Failure to follow these instructions can result in death, electric shock, injury or property damage.

See warnings and important information before removing or replacing parts. After any maintenance or repair work, always test fire the heater in accordance with the start-up instructions *on Page 58, Section 14* to help ensure all safety systems are in working order before leaving the heater to operate. Minor faults may be traced by using the troubleshooting charts *on Page 63, Section 16 through Page 68, Section 16.3*.

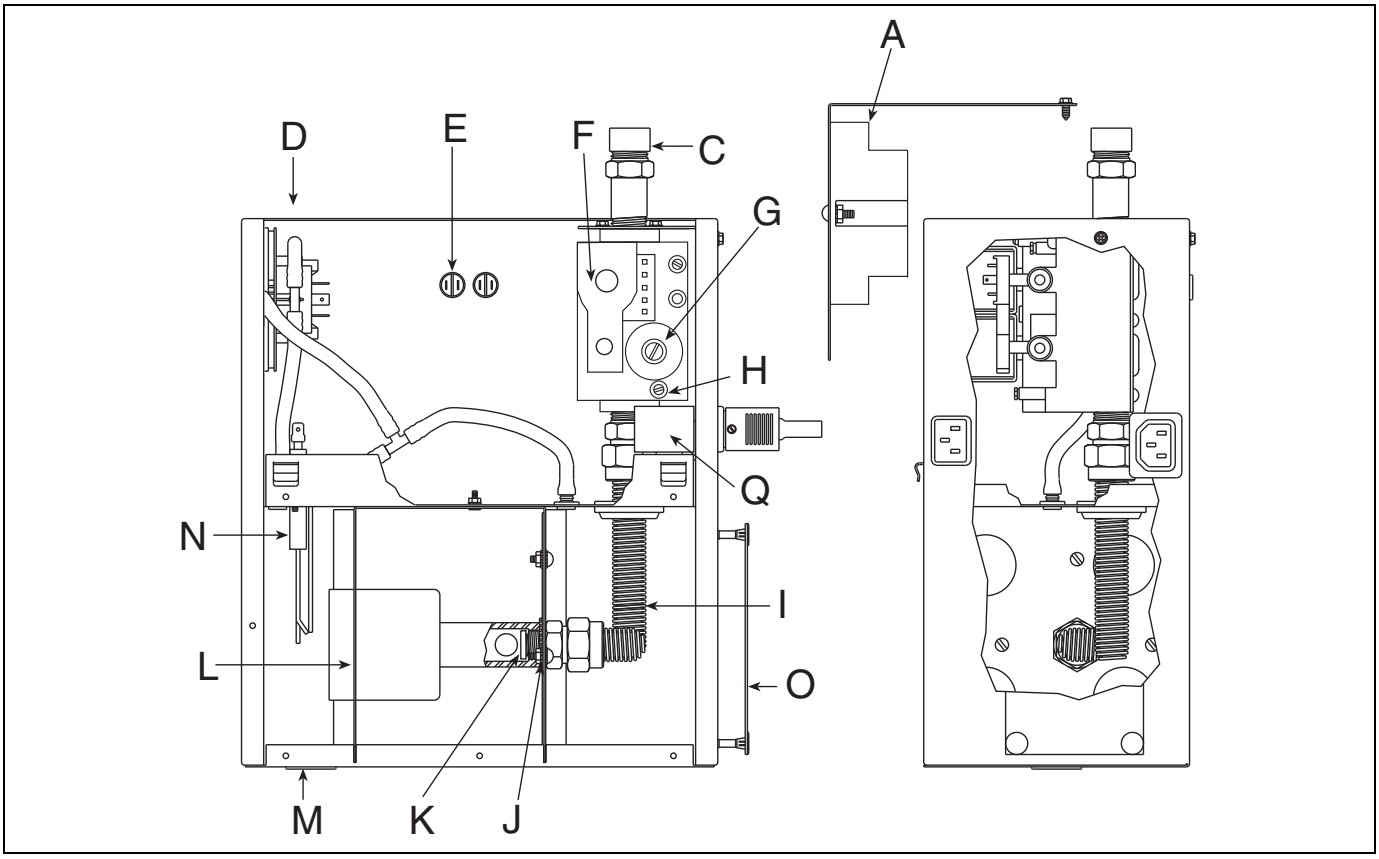

Item	Description	Part Number
A	Automatic Control Unit	90438704
C	Flex Line Adapter	91220700
D	Pressure Switch for BH25 - BH55, BH50EF, (0.23" w.c.) BH15 and BH20 (0.32" w.c.) BH30EF and BH35EF (0.41" w.c.) BH45EF (0.47" w.c.) BH40EF (0.79" w.c.) BH25EF (0.59" w.c.)	 90439801 90439802 90439803 90439804 90439808 90439809
E	Amber Neon Lamp	91320602
F	Gas Valve	90033101
G	Governor Screw	N/A
H	Outlet Pressure Tap	N/A
I	Flex Manifold	03090702T
J	Star Washer	96212100
K	Jet Orifice (*See Page 73, Section 18.10.1*)	N/A
L	Burner Cup Assembly	03020100
M	Mica Window Assembly	02552303
N	Electrode Assembly	90427403
N/S	Electrode Gasket	02558501

Item	Description	Part Number
O	Dust Arrest Baffle Plate	07230000
Q	Mains in socket with EMC Filter	90438902
N/S	Ignition Wire	90427704
N/S	Outside Air Kit	07260000
N/S	Flue Collar 100 mm	91911700
N/S	Outside Air Mounting Plate	07261000
N/S	#8 x 3/8 Washer Head Screw	94118106
N/S	Burner Tube Gasket	02568200
N/S	Wire Purple 12.5"	07250007
N/S	Wire Harness BH Gas Valve	07250006
N/S	Wire Harness BH Pressure Switch	07250005
N/S	Wire Harness BH Main Power	07250004
N/S	Lockout Indicator Connector (male)	91324000
N/S	Lockout Indicator Connector (female)	91324001

Notes:

SECTION 18: SPECIFICATIONS

18.1 Material Specifications

18.1.1 Combustion and Tubes

100 mm dia. 16 gauge heat treated aluminised mild steel.

18.1.2 Reflectors

NS3 H14 aluminium or 1.4016 2R stainless steel (option).

18.2 Heater Specifications

18.2.1 Sequence Controller

Fully automatic, three try, direct spark, 100% shut off ignition flame rectification module.

18.2.2 Electrical

Rating: 230V, 50 Hz, 1 Ø, 1 A

Connection: 3 pin moulded plug

18.2.3 Gas Supply

Connection: Rc1/2 (1/2" BSP int)

Natural G20:

Minimum - Inlet 15 mbar (6 in wg)

Maximum - Inlet 50 mbar (20 in wg)

Natural G25:

Minimum - Inlet 17.5 mbar (7 in wg)

Maximum - Inlet 50 mbar (20 in wg)

LP Gas (Propane or Butane):

Minimum - Inlet 32.5 mbar (13 in wg)

Maximum - Inlet 50 mbar (20 in wg)

18.3 Venting Specifications

18.3.1 Fans

BH-15, 20, 25, 30 ..... Model: Torin DSF 133-42

BH-25 EF, 30 EF, 35 EF,
BH-35, 40, 45 ..... Model: Torin DSA 524-202

BH-40 EF, 45 EF,
50 EF, BH-50 ..... Model: McMillan N1398A

BH30DL, 40DL, BH50DL/EF,
60DL/EF, 70DL/EF ..... Model: McMillan N1398A

Multiburner ..... Model: Airflow 83 BWLG
..... Model: Airflow 90 BWTL

Consult the manufacturer for availability of alternate fans.

18.3.2 Flue

When fitted, the flue must be 100 mm, or greater in diameter, and must conform to National Codes. The flue must be self supporting. Inlet must be 100 mm diameter.

Multiburner - Flue must be 150 mm diameter and will be sized to suit arrangement and will connect to the fan. Flue material must conform to National Codes. The flue must be self supporting.

18.4 Suspension Specifications

Hang heater with materials with a minimum working load of 33 kg.

18.5 Controls Specifications

Time switches, thermostats, etc. can be wired into the electrical supply. External controls supplied as an optional extra.

18.6 Environment

The heater is limited to operate in an ambient temperature range of 0° C – 32° C (32° F – 86° F) with a maximum relative humidity of 95%.

18.7 Linear Heater	BH15ST	BH20ST	BH25ST BH25ST/EF	BH30ST BH30ST/EF	BH35ST BH35ST/EF	BH40ST BH40ST/EF	BH45ST BH45ST/EF	BH50ST BH50ST/EF	BH55ST*
Input - Gross (kW)	15	20	25	30	35	40	45	50/51	55
Input - Net (kW)	13.5	18	22.5	27	31.5	36	40.5	45/46	49.5
Tube Length (mm)	6096	9144	9144	12192	12192	12192	15240	15240	18288
Overall Heater Length (mm)	6661	9709	9709	12757	12767	12767	15815	15850	18579
Weight (kg)	42	57	57	75	75	75	90	97	102
Heated Area (m^2)	20-160	30-210	40-265	50-315	55-370	65-420	70-475	80-525	90-620
Minimum Installation Height(mm)	3500	3500	3500	3500	4600	5000	5000	5000	6000
Recommended Installation Height (mm)	3500	3600	3900	4200	4800	5500	6700	7600	8000

* Only available in Multiburner.

18.8 Double Linear Heater	BH30DL	BH40DL	BH50DL BH50DL/EF	BH60DL BH60DL/EF	BH70DL BH70DL/EF
Input - Gross (kW)	30	40	50	60	70
Input - Net (kW)	27.5	36	45	54	63
Tube Length (mm)	12802	18898	18898	24994	24994
Overall Heater Length (mm)	13462	19558	19558	25654	25654
Weight (kg)	85	115	122	157	157
Heated Area (m^2)	50-315	65-420	80-525	100-630	110-740
Minimum Installation Height (mm)	3500	3500	3500	3500	4600
Recommended Installation Height (mm)	3500	3600	3900	4200	4800

18.9 U-Tube Heater	BH15UT	BH20UT	BH25UT BH25UT/EF	BH30UT BH30UT/EF	BH35UT BH35UT/EF	BH40UT BH40UT/EF	BH45UT BH45UT/EF	BH50UT BH50UT/EF
Input - Gross (kW)	15	20	25	30	35	40	45	50
Input - Net (kW)	13.5	18	22.5	27	31.5	36	40.5	45
Tube Length (mm)	3531	5055	5055	6579	6579	6579	8103	8103
Overall Heater Length (mm)	3822	5346	5346	6870	6870	6870	8394	8394
Weight (kg)	51	65	65	81	81	81	100	107
Heated Area (m^2)	20-160	30-210	40-265	50-315	55-370	65-420	70-475	80-525
Minimum Installation Height (mm)	3500	3500	4000	4700	5000	5000	5000	5000
Recommended Installation Height (mm)	3500	3600	4000	4700	5000	5500	6700	7600

18.10 Burner Specifications

Figure 37: Linear and U-Tube Specifications

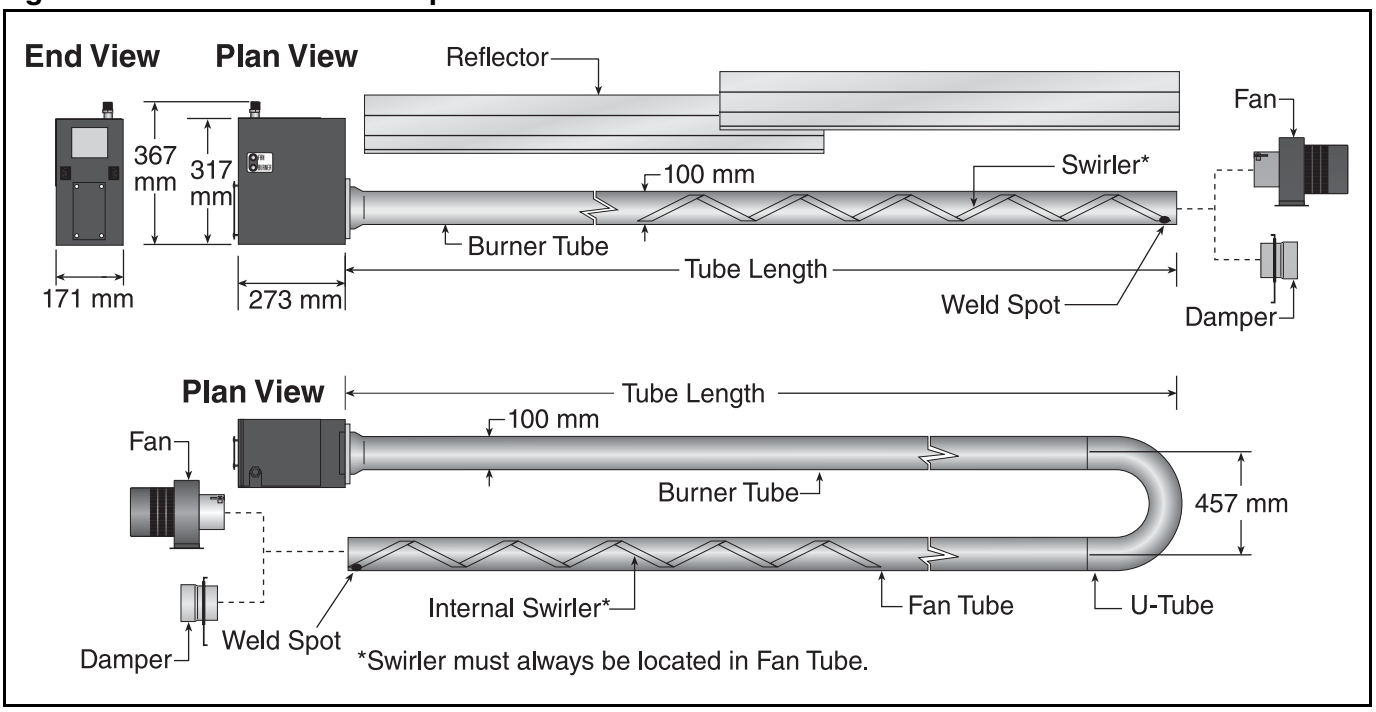

18.10.1 Standard Burner Specifications	BH15	BH20	BH25	BH30	BH35	BH40	BH45	BH50	BH55*
Burner Airplate ID Number	20	15	12	6	7	9	10	11	19
Jet Numbers - Natural G20 & 25	#30	3.8 mm	#19	4.7 mm	#9	#3	#2	B	E 6.8 mm (G25)
Jet Numbers - Propane/Butane	#46	2.3 mm	#37	#33	3.1 mm	3.3 mm	#29	#26	#24
Jet Numbers - Pressure Couple	1.95 mm	2.25 mm	2.5 mm	2.7 mm	2.9 mm	3.2 mm	3.25 mm	3.4 mm	-
Gas Consumption** Natural G20 (m^3/h)	1.43	1.91	2.38	2.86	3.34	3.81	4.29	4.76	5.24
Gas Consumption** Natural G25 (m^3/h)	1.66	2.22	2.77	3.32	3.88	4.43	4.99	5.54	6.09
Gas Consumption** Propane (m^3/h) [kg/h]	0.56 [1.08]	0.75 [1.44]	0.94 [1.80]	1.13 [2.16]	1.32 [2.52]	1.51 [2.88]	1.69 [3.25]	1.88 [3.61]	2.07 [3.97]
Gas Consumption** Butane (m^3/h)	0.43	0.57	0.72	0.86	1.00	1.15	1.29	1.43	1.57
Governor Pressure Butane (mbar)	21.4	19.7	19.2	17.4	18.2	17.9	16.9	18.4	18.3
Governor Pressure Butane (in wg)	8.6	7.9	7.7	7.0	7.3	7.2	6.8	7.4	7.3
Governor Pressure Propane (mbar)	26.1	26.1	26.1	27.4	26.1	28.6	28.6	26.1	26.1
Governor Pressure Propane (in wg)	10.5	10.5	10.5	11.0	10.5	11.5	11.5	10.5	10.5

*Only available in Multiburner. **Based on Gross Caloric Value.

Natural G20:	8.7 mbar	3.5 in wg
Natural G25:	11.1 mbar	4.5 in wg
Natural G25 BH 55*:	9.5 mbar	3.8 in wg

18.10.2 EF Burner Specifications	BH25/EF	BH30/EF	BH35/EF	BH40/EF	BH45/EF	BH50/EF
Burner Airplate ID Number	14	5	6	5	6	10
Jet Numbers - Natural G20	#20	#16	#9	#5	#2	B
Gas Consumption** - Natural G20 (m^3/h)	2.38	2.86	3.36	3.81	4.29	4.86

**Based on Gross Caloric Value.

Attach this information to a wall near the ROBERTS GORDON® heater.

ROBERTS GORDON®
Infrared Heating

Read the Installation, Operation, and Service Manual thoroughly before installation, operation, or service.

Know your model number and installed configuration.

Model number and installed configuration are found on the burner and in the Installation, Operation and Service Manual.

Write the largest clearance dimensions with permanent ink according to your model number and configuration in the open spaces below.

OPERATING INSTRUCTIONS

1. STOP! Read all safety instructions on this information sheet.
2. Open the manual gas valve in the heater supply line.
3. Turn on electric power to the heater.
4. Set the thermostat to desired setting.

TO TURN OFF THE HEATER

1. Set the thermostat to off or the lowest setting.

IF THE HEATER WILL NOT OPERATE, TO ENSURE YOUR SAFETY, FOLLOW THESE INSTRUCTIONS TO SHUT DOWN YOUR HEATER

1. Set the thermostat to off or the lowest setting.
2. Turn off electric power to the heater.
3. Turn off the manual gas valve in the heater supply line.
4. Call your registered installer/contractor qualified in the installation and service of gas-fired heating equipment.

⚠WARNING

Fire Hazard

Keep all flammable objects, liquids and vapors the minimum required clearances to combustibles away from heater.

Some objects will catch fire or explode when placed close to heater.

Failure to follow these instructions can result in death, injury or property damage.

Maintain_____clearance to the side and _____ clearance below the heater from vehicles and combustible materials.

Roberts-Gordon LLC
1250 William Street
P.O. Box 44
Buffalo, NY 14240-0044 USA
Telephone: +1.716.852.4400
Fax: +1.716.852.0854
Toll Free: 800.828.7450

Roberts-Gordon Europe Limited
Unit A, Kings Hill Business Park
Darlaston Road, Wednesbury
West Midlands WS10 7SH UK
Telephone: +44 (0)121 506 7700
Fax: +44 (0)121 506 7701

Service Telephone: +44 (0)121 506 7709
Service Fax: +44 (0)121 506 7702
E-mail: uksales@rg-inc.com
E-mail: export@rg-inc.com

Installation Code and Annual Inspections:
All installation and service of ROBERTS GORDON® equipment must be performed by a contractor qualified in the installation and service of equipment sold and supplied by Roberts-Gordon and conform to all requirements set forth in the ROBERTS GORDON® manuals and all applicable governmental authorities pertaining to the installation, service, operation and labeling of the equipment. To help facilitate optimum performance and safety, Roberts-Gordon recommends that a qualified contractor conduct, at a minimum, annual inspections of your ROBERTS GORDON® equipment and perform service where necessary, using only replacement parts sold and supplied by Roberts-Gordon.

Further Information: Applications, engineering and detailed guidance on systems design, installation and equipment performance is available through ROBERTS GORDON® representatives. Please contact us for any further information you may require, including the Installation, Operation and Service Manual.

This product is not for residential use.

© 2012 Roberts-Gordon LLC All rights reserved. No part of this work covered by the copyrights herein may be reproduced or copied in any form or by any means – graphic, electronic, or mechanical, including photocopying, recording, taping, or information storage and retrieval systems – without written permission of Roberts-Gordon LLC.

www.rg-inc.com Printed in U.S.A. P/N 91037912 Rev. J