ROBERTS GORDON®

CORAYVAC™

For Speciality Fuel Repair Garages

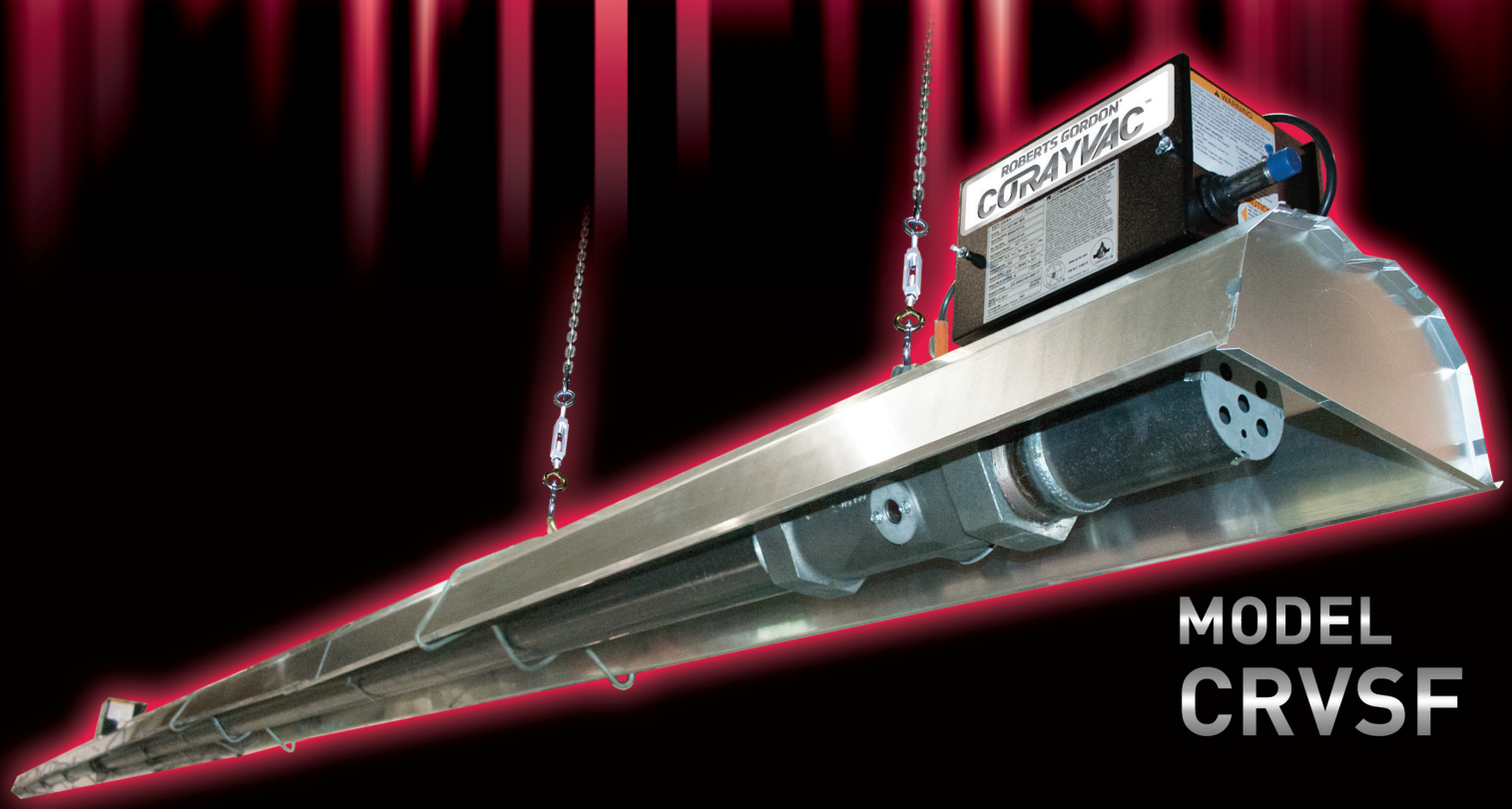

MODEL
CRVSF

CSA Approved for Facilities that Perform Major Repairs on CNG/LNG-Fueled Vehicles*

- Even temperatures and heat patterns from systems designed with lower input, in-series burners
- Durability and longevity with cast iron combustion chambers and schedule 40 steel pipe
- Sealed construction from tubing screwed together for tight fit to help eliminate leakage and sustain tube temperatures
- Proper combustion, efficiency and tube temperatures from pre- and double filtered combustion air
- Extra safety feature with zero regulator design

*In compliance with NFPA30A 7.6.6 (2012 Edition)

DESIGN CERTIFIED®

CERTIFIED®

THE INDUSTRY LEADER
RADIANT
EFFICIENCY™

800.828.7450
www.robertsgordon.com

CoRayVac®

CLASSIC SF

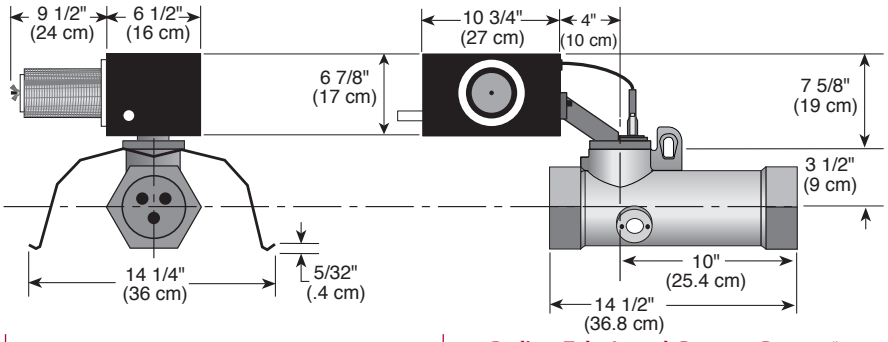

	Branch Number	Burners				Radiant Tube Length Between Burners* Minimum ft [m]
System Configurations	1	CRVSF-4	CRVSF-4	CRVSF-4	CRVSF-4	21 [6]
	2	CRVSF-4	CRVSF-2	CRVSF-4	CRVSF-4	21 [6]
	3	CRVSF-6	CRVSF-4	CRVSF-4	CRVSF-4	21 [6]
	4	CRVSF-8	CRVSF-4	CRVSF-4	CRVSF-4	21 [6]
	5	CRVSF-6	CRVSF-6	CRVSF-4	CRVSF-4	31.5 [9.6]
	6	CRVSF-8	CRVSF-6	CRVSF-4	N/A	31.5 [9.6]
	7	CRVSF-8	CRVSF-6	CRVSF-6	N/A	31.5 [9.6]

Model		CRVSF-2	CRVSF-4	CRVSF-6	CRVSF-8
Input (Btu/h) x (1000)		**20**	**40**	**60**	**80**
Inlet Pressure	[in wc] NG min.	4.5			
	LPG Propane min.	10.5			
	NG & LPG Propane max.	14			
Gas Connection	NPT	½"			
Fuel		NG or LPG Propane (CRVSF-2 - NG Only)			
Electrical Supply**		120 V, 60 Hz, 0.3 A (Connection Cord with Three-Prong Molded Plug)			
Burner Head and Combustion Chamber		Cast Iron			
Heat Exchanger Tubing	Radiant	4" dia. Schedule 40 Steel Pipe			
	Tailpipe	4" dia. Schedule 40 Steel Pipe (4" or 6" dia, Heat-Treated Aluminized or Double Coated Porcelain optional)			
Reflector and End Caps		.024 Aluminum			
Control System		Fully Automatic, Three-Try, 100% Shut-Off, Direct Spark Electronic Ignition Control			
Approved As		Indoor (Vented), Side Wall Venting Recommended			
Certification		ANSI Z83.20/CSA 2.34, C GA 2.17			
Burner and Cast-Iron Combustion Chamber Weight	lb [kg]	40.25 [18]			
Pipe Weight	lb [kg]	10.9 [5]/ft			
Warranty		Twenty-five Year Limited on Cast-iron combustion chamber, Three-Year Limited on all other components. (Refer to Installation, Operation and Service Manual for details)			

*See Design Manual for maximum radiant tube length between burners **Refer to Pump Spec Sheet for complete system electrical requirements.

Clearances to Combustibles ***in [cm]

Model		CRVSF-2/-4/-6/-8			CRVSF-2/-4/-6/-8
Horizontal	A	4 [11]	One Side Reflector	A	4 [11]
	B	20 [51]		B	12 [31]
	C	48 [122]		C	56 [143]
	D	20 [51]		D	20 [51]

***Clearances B, C and D can be reduced by 50% for locations 25 ft (7 m) or more downstream of the burner. For other mounting options and associated clearances, complete installation, operation and service criteria, please see the current issue of the Installation, Operation and Service Manual.

This product is not for residential use.

This document is intended to assist licensed professionals in the exercise of their professional judgment.

Roberts-Gordon LLC
1250 William Street
P.O. Box 44
Buffalo, NY 14240-0044 USA
Telephone: +1.716.852.4400
Fax: +1.716.852.0854
Toll Free: 800.828.7450
www.robertsgordon.com

©2016 Roberts-Gordon LLC All rights reserved. No part of this work covered by the copyrights herein may be reproduced or copied in any form or by any means – graphic, electronic, or mechanical, including photocopying, recording, taping, or information storage and retrieval systems – without written permission of Roberts-Gordon LLC.