FOR YOUR SAFETY
If you smell gas:

1. **Open windows.**
2. **DO NOT try to light any appliance.**
3. **DO NOT use electrical switches.**
4. **DO NOT use any telephone in your building.**
5. **Extinguish any open flame.**
6. **Leave the building.**
7. **Immediately call your local gas supplier after leaving the building. Follow the gas supplier's instructions.**
8. **If you cannot reach your gas supplier, call the Fire Department.**

⚠ WARNING

Fire Hazard

Keep all flammable objects, liquids and vapors the minimum required clearances to combustibles away from heater.

Some objects will catch fire or explode when placed close to heater.

Failure to follow these instructions can result in death, injury or property damage.

ROBERTS GORDON

EnergyTube® 3

Gas-Fired, Low Intensity Unitary Heater Designed for Harsh Environments

Installation, Operation & Service Manual

ET3-40
ET3-60
ET3-80
ET3-100
ET3-125
ET3-150
ET3-175

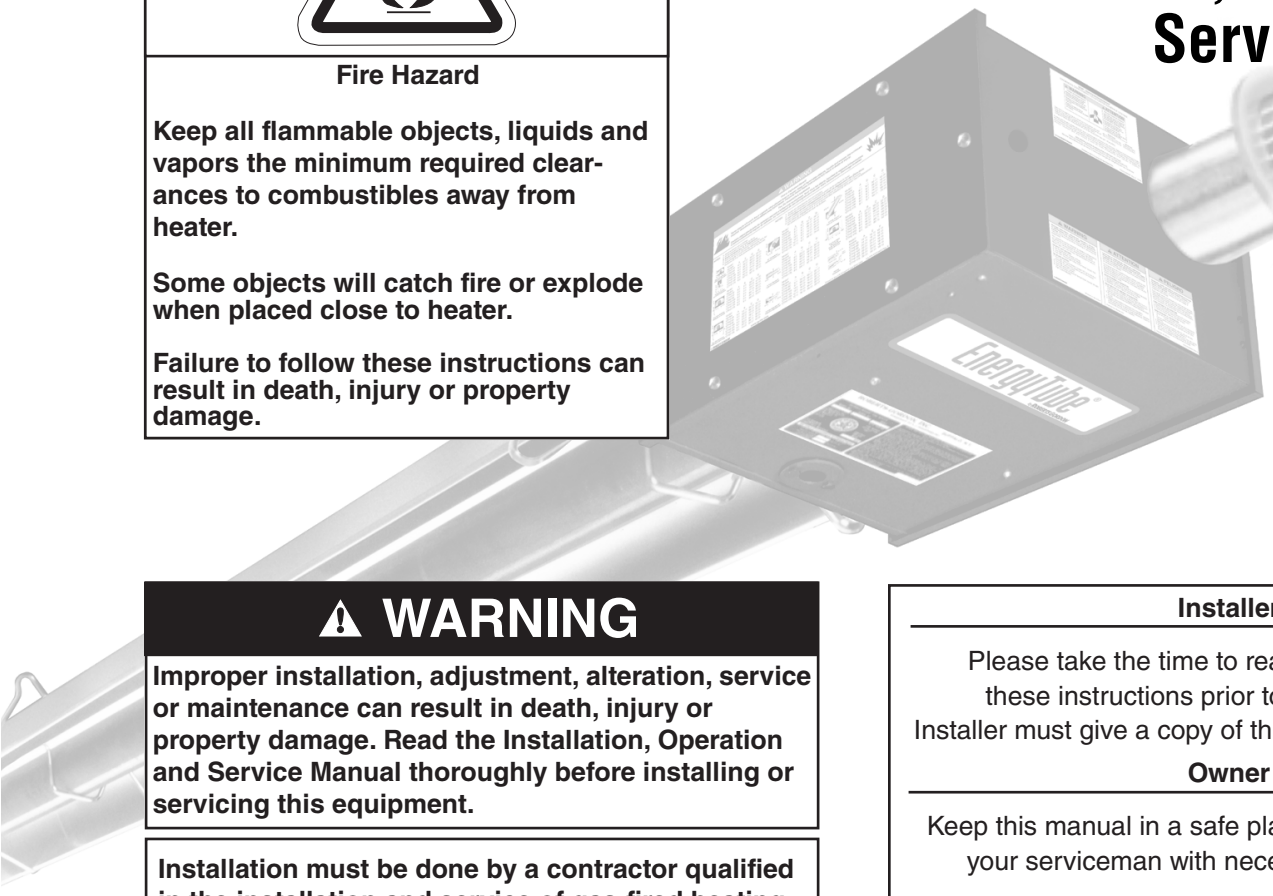

⚠ WARNING

Improper installation, adjustment, alteration, service or maintenance can result in death, injury or property damage. Read the Installation, Operation and Service Manual thoroughly before installing or servicing this equipment.

Installation must be done by a contractor qualified in the installation and service of gas-fired heating equipment or your gas supplier.

Installer

Please take the time to read and understand these instructions prior to any installation. Installer must give a copy of this manual to the owner.

Owner

Keep this manual in a safe place in order to provide your serviceman with necessary information.

DESIGN CERTIFIED ®

CERTIFIED ®

Roberts-Gordon LLC
1250 William Street
P.O. Box 44
Buffalo, New York 14240-0044
Telephone: +1.716.852.4400
Fax: +1.716.852.0854
Toll Free: 800.828.7450

www.rg-inc.com
www.radiantheaters.com

© 2012 Roberts-Gordon LLC

P/N ET132100NA Rev. D 03/12

TABLE OF CONTENTS

SECTION 1: Heater Safety 1
1.1 Manpower Requirements 1
1.2 Safety Labels and Their Placement 1
1.3 California Proposition 65 1
SECTION 2: Installer Responsibility 4
2.1 Wall Tag 4
2.2 Corrosive Chemicals 5
2.3 National Standards and Applicable Codes 5
SECTION 3: Clearances to Combustibles 6
3.1 Required Clearances to Combustibles 6
SECTION 4: National Standards and Applicable Codes ... 11
4.1 Gas Codes 11
4.2 Aircraft Hangars 11
4.3 Public Garages 11
4.4 Electrical 11
4.5 Venting 11
4.6 High Altitude 11
SECTION 5: Major Components 12
5.1 Standard Parts List 13
SECTION 6: Heater Installation 15
6.1 Outdoor Mounting 17
6.2 Burner Tube Installation 20
6.3 Tube Clamp Package Installation 20
6.4 Coupling and Tube Assembly 21
6.5 Turbulator Installation 22
6.6 Reflector Installation 23
6.7 Burner Installation 25
SECTION 7: Optional Heater Accessories 26
7.1 U-Tube Configuration 26
7.2 Elbow Package Configuration 29
7.3 Reflector Side Extension (Not For Outdoor Use) 31
7.4 Lower Clearance Shield Installation (Not For Outdoor Use) 32
7.5 Two-Foot Decorative Grille Installation (Not For Outdoor Use) 33
7.6 Protective Grille Installation (Not For Outdoor Use) 34
SECTION 8: Venting 36
8.1 General Venting Requirements 36
8.2 Unvented Operation 37
8.3 Horizontal Venting 37
8.4 Vertical Venting 37
8.5 Unvented Operation Tube Termination 37
8.6 Length Requirements 37
8.7 Venting Options 38
8.8 Horizontal Ventilation 4" (10 cm) Pipe 39
8.9 Vertical Ventilation 4" (10 cm) Pipe 39
8.10 Common Sidewall Venting 40
8.11 Common Vertical Venting 41
8.12 Outside Combustion Air Supply 42
SECTION 9: Gas Piping 44
SECTION 10: Wiring 46
10.1 Line Voltage Thermostat Wiring 46
10.2 Low Voltage Thermostat with One Burner 46
10.3 Low Voltage Thermostat Wiring with Multiple Burners 47
10.4 Electrical Connection to the Burner Box using Line Voltage Thermostat on Control 47
10.5 For External Thermostat Connection 48
10.6 Electrical Connection to Burner Box with Optional External Low Voltage Thermostat 48
10.7 Internal Wiring 48
10.8 Ladder Diagram 49
SECTION 11: Operation and Maintenance 50
11.1 Sequence of Operation 50
11.2 To Shut Off Heater 50
11.3 To Start Heater 50
11.4 Pre-Season Maintenance and Annual Inspection 50
11.5 Maintenance Checklist 51
SECTION 12: Troubleshooting 53
12.1 Honeywell SmartValve® II Troubleshooting 54
12.2 Troubleshooting Flow Chart 55
12.3 Manifold Gas Pressure Setting 57
SECTION 13: Replacement Parts 58
SECTION 14: General Specifications 61
14.1 Material Specifications 61
14.2 Heater Specifications 61
14.3 Suspension Specifications 61
14.4 Controls Specifications 61
SECTION 15: The ROBERTS GORDON® ENERGYTUBE® 3 Warranty 63

© 2012 Roberts-Gordon LLC

All rights reserved. No part of this work covered by the copyrights herein may be reproduced or copied in any form or by any means - graphic, electronic, or mechanical, including photocopying, recording, taping or information storage and retrieval systems - without the written permission of Roberts-Gordon LLC.

Printed in U.S.A.

TABLE OF FIGURES

Figure 1: Top and Bottom Panel Label Placement 2
Figure 2: Side and Back Panel Label Placement 3
Figure 3: Standard Reflector 7
Figure 4: One Side Reflector 7
Figure 5: Two Side Reflectors 7
Figure 6: 45° Tilt Reflector 8
Figure 7: U-Tube, Standard Reflector 8
Figure 8: U-Tube, 45° 8
Figure 9: U-Tube, Opposite 45° Reflector 9
Figure 10: 2-Foot Deco Grille and Protective Grille 9
Figure 11: Lower Clearance Shield* 9
Figure 12: Venting 10
Figure 13: Major Component Descriptions 12
Figure 14: Critical Hanger Placement (Indoor Installation) 16
Figure 15: Critical Hanger Placement (Outdoor Installation) 17
Figure 16: Linear Heater Assembly Overview 18
Figure 17: Linear Heater Layout Overview 19
Figure 18: U-Tube Heater Assembly Overview 27
Figure 19: U-Tube heater Layout Overview 28
Figure 20: Reflector Joint Detail 30
Figure 21: Outdoor Vent Cap Installation 36
Figure 22: Tube Termination 37
Figure 23: Gas Connection with Flexible Gas Hose 45

LIST OF TABLES

Table 1: Contents of Heater Burner Carton 13
Table 2: Contents of Core and Extension Packages 13
Table 3: Component Package Guide 14
Table 4: Accessories Package (03200001) 14

SECTION 1: HEATER SAFETY

Your Safety is Important to Us! This symbol is used throughout the manual to notify you of possible fire, electrical or burn hazards. Please pay special attention when reading and following the warnings in these sections.

Installation, service and annual inspection of heater must be done by a contractor qualified in the installation and service of gas-fired heating equipment.

Read this manual carefully before installation, operation or service of this equipment.

This heater is designed for heating nonresidential indoor or outdoor spaces. Do not install in residential spaces. These instructions, the layout drawing, local codes and ordinances, and applicable standards that apply to gas piping, electrical wiring, venting, etc. must be thoroughly understood before proceeding with the installation.

Protective gear is to be worn during installation, operation and service. Thin sheet metal parts, including the aluminum reflector portion of the heater and the various venting components, have sharp edges. To prevent injury, the use of work gloves is recommended. The use of gloves will also prevent the transfer of body oils from the hands to the surface of the reflector.

Before installation, check that the local distribution conditions, nature of gas and pressure, and adjustment of the appliance are compatible.

This heater must be applied and operated under the general concepts of reasonable use and installed using best building practices.

This appliance is not intended for use by persons (including children) with reduced physical, sensory or mental capabilities, or lack of experience and knowledge, unless they have been given supervision or instruction concerning use of the appliance by a person responsible for their safety. Children should be supervised to ensure that they do no play with the appliance.

For additional copies of the Installation, Operation and Service Manual, please contact Roberts-Gordon LLC.

1.1 Manpower Requirements

To prevent personal injury and damage to the heater, two persons will be required for installation.

1.2 Safety Labels and Their Placement

Product safety signs or labels should be replaced by the product user when they are no longer legible. Please contact Roberts-Gordon LLC or your ROBERTS GORDON® independent distributor to obtain replacement signs or labels. *See Page 2, Figure 1 through Page 3, Figure 2*.

1.3 California Proposition 65

In accordance with California Proposition 65 requirements, a warning label must be placed in a highly visible location on the outside of the equipment (i.e., near equipment's serial plate). See label placement drawing *on Page 2, Figure 1* for label location. Avoid placing label on areas with extreme heat, cold, corrosive chemicals or other elements. To order additional labels, please contact Roberts-Gordon LLC or your ROBERTS GORDON® independent distributor.

FIGURE 1: Top and Bottom Panel Label Placement

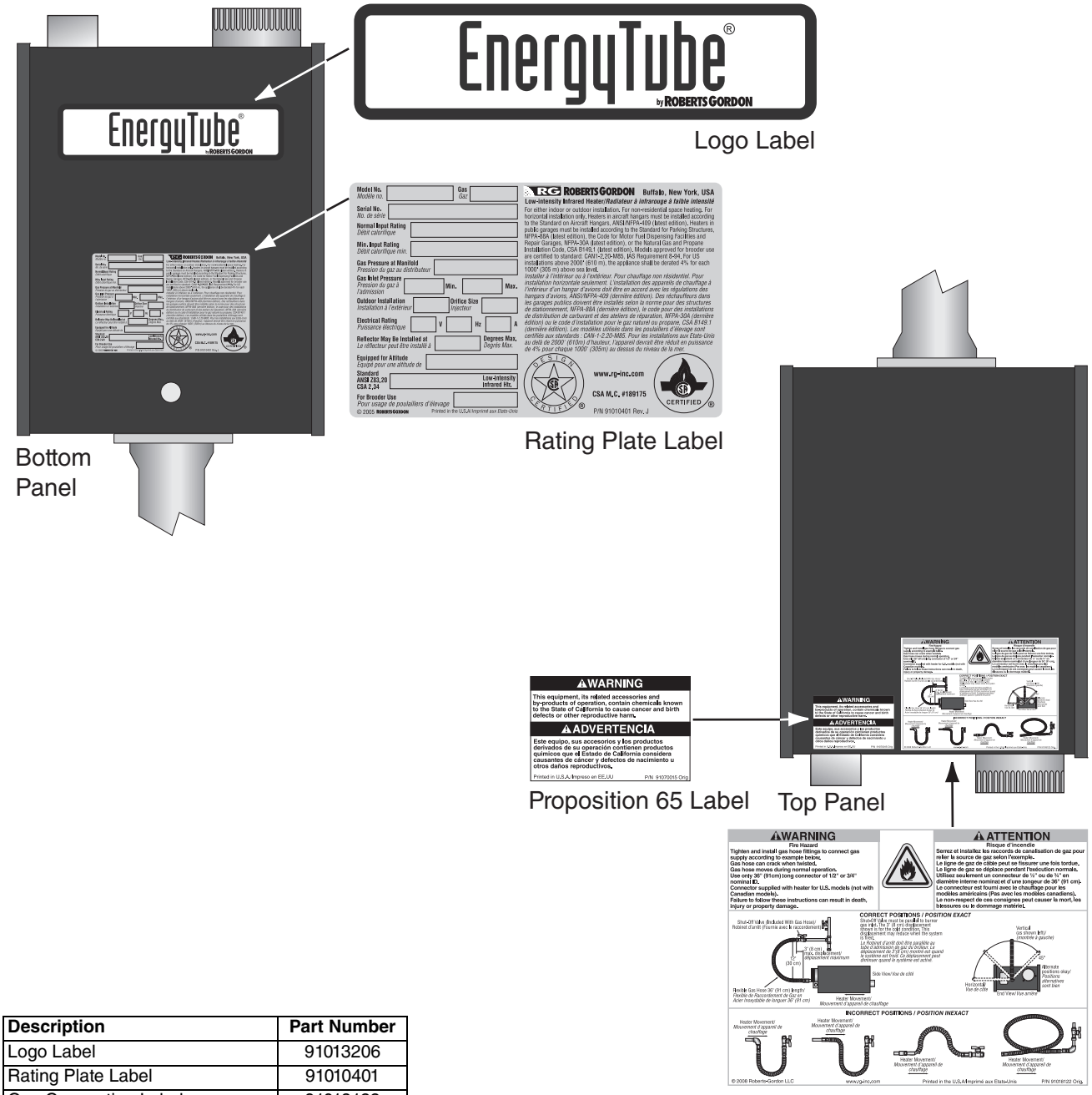

Description	Part Number
Logo Label	91013206
Rating Plate Label	91010401
Gas Connection Label	91018122
Proposition 65 Label	91070015

FIGURE 2: Side and Back Panel Label Placement

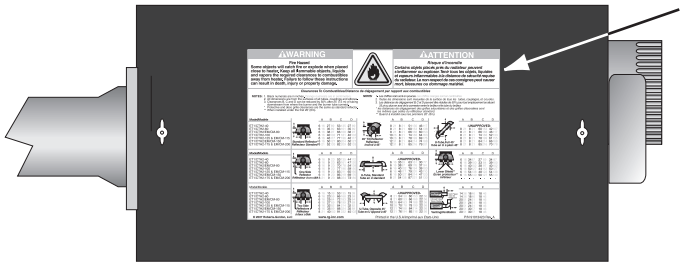

Control Side Panel

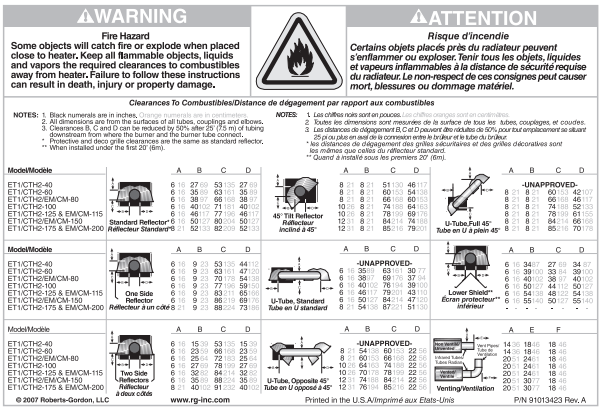

Clearances to Combustibles Label

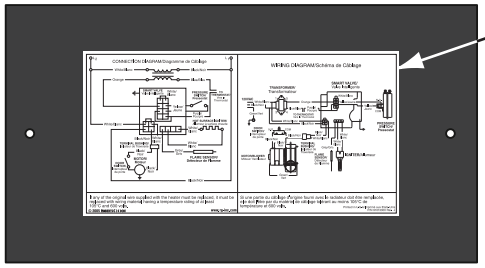

Control Side Panel (Inside)

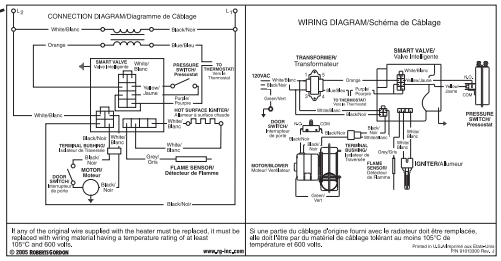

Wiring Label

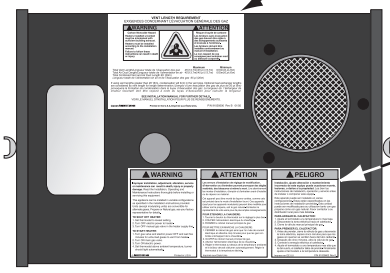

Back Panel

Vent Length Label

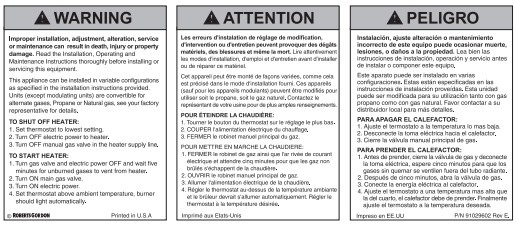

Lighting Instruction Plate Label

Description	Part Number
Clearances to Combustibles Label	91013423
Wiring Label	91013300
Vent Length Label	91039500
Lighting Instruction Plate Label	91029602

SECTION 2: INSTALLER RESPONSIBILITY

The installer is responsible for the following:

- To install the heater, as well as the gas and electrical supplies, in accordance with applicable specifications and codes. Roberts-Gordon LLC recommends the installer contact a Local Building inspector or Fire Marshal for guidance.
- To use the information given in a layout drawing and in the manual together with the cited codes and regulations to perform the installation.
- To install the heater in accordance with the clearances to combustibles.
- To furnish all needed materials not furnished as standard equipment.
- Plan location of supports. Locate a support near all elbows.
- To provide access to burners for servicing on all sides and for burner removal.
- To provide the owner with a copy of this installation, operation and service manual.
- To never use heater as support for a ladder or other access equipment and never hang or suspend anything from heater.
- To ensure there is adequate air circulation around the heater and to supply air for combustion, ventilation and distribution in accordance with local codes.
- To safely and adequately install heater using materials with a minimal working load of 75 lbs (33 kg).
- To ensure the heater is placed in an approved application.
- Be sure the heater has a downward pitch of 1/2" per 20' (1 cm per 6 m) away from the burner.
- A minimum of 10' (3 m) of tubing on ET3-60/80 and a minimum of 15' (4.6 m) of tubing on ET3-100/125/150/175 are required between the burner and the first elbow.
- Indoor hanging: Provide a suspension with vertical length of chain or swinging rod which has at least 2" (5 cm) of horizontal travel for each burner in a straight run. Be sure the suspension system is sufficiently flexible to accomodate thermal expansion, which occurs as the system heats up, *See Page 16, Figure 14*.
- Outdoor hanging: Chain should not be used when installing the unit outdoors. Use a suspension system which minimizes the lateral movement or swing which might damage reflectors. *See Page 17, Figure 15*.
- Washbays/car washes: The heater must not be exposed to the direct spray from a pressure washer. To reduce the possibility of spray entering the burner, utilize an outside combustion air supply. *See Page 42, Section 8.12*.

The heater has been extensively tested under extreme conditions and is highly resistant to the outdoor elements. Care must be taken to design the proper hanging brackets and suspension (*See Page 17, Figure 15*) for the heater in high wind areas.

2.1 Wall Tag

A laminated wall tag is available for the heater as a permanent reminder of the safety instructions and the importance of the required clearances to combustibles. Please contact Roberts-Gordon LLC or your ROBERTS GORDON® independent distributor to obtain the wall tag. Affix the tag by peeling off the backing of the adhesive strips on the rear surface and position the tag on a wall near the heater's controls (e.g. thermostat or ROBERTS GORDON® Controller).

A copy of the wall tag (P/N 91037912) is illustrated on the back cover. For an immediate solution, you may affix this copy on the wall near the heater.

Know your model number and installed configuration. Model number and installed configuration are found on the burner and in the Installation, Operation and Service Manual. *See Page 7, Figure 3 through Page 10, Figure 12*. Write the proper clearance dimensions in permanent ink according to your model number and configuration in the open spaces on the tag.

2.2 Corrosive Chemicals

⚠ CAUTION

Product Damage Hazard

Do not use heater in area containing corrosive chemicals.

Refer to appropriate Material Safety Data Sheets (MSDS).

Failure to follow these instructions can result in product damage.

Roberts-Gordon LLC cannot be responsible for ensuring that all appropriate safety measures are undertaken prior to installation; this is entirely the responsibility of the installer. It is essential that the contractor, the sub-contractor, or the owner identifies the presence of combustible materials, corrosive chemicals or halogenated hydrocarbons* anywhere in the premises.

** **Halogenated Hydrocarbons** are a family of chemical compounds characterized by the presence of halogen elements (fluorine, chlorine, bromine, etc.). These compounds are frequently used in refrigerants, cleaning agents, solvents, etc. If these compounds enter the air supply of the burner, the life span of the heater components will be greatly reduced. An outside air supply must be provided to the burners whenever the presence of these compounds is suspected. Warranty will be invalid if the heater is exposed to halogenated hydrocarbons.*

2.3 National Standards and Applicable Codes

All appliances must be installed in accordance with the latest revision of the applicable standards and national codes. This refers also to the electric, gas and venting installation. Note: Additional standards for installations in Public Garages, Aircraft Hangars, etc. may be applicable.

SECTION 3: CLEARANCES TO COMBUSTIBLES

3.1 Required Clearances to Combustibles

⚠ WARNING

Fire Hazard

Keep all flammable objects, liquids and vapors the minimum required clearances to combustibles away from heater.

Some objects will catch fire or explode when placed close to heater.

Failure to follow these instructions can result in death, injury or property damage.

Clearances are the required distances that combustible objects must be away from the heater to prevent serious fire hazards. Combustibles are materials that may catch on fire and include common items such as wood, paper, rubber, fabric, etc. **Maintain clearances to combustibles at all times for safety.**

Clearances for all heater models are located on the burner of the heater and *on Page 7, Figure 3 through Page 10, Figure 12* in this manual. Check the clearances on each burner for the model heater being installed to make sure the product is suitable for your application and the clearances are maintained. Read and follow the safety guidelines below:

- Keep gasoline or other combustible materials including flammable objects, liquids, dust or vapors away from this heater or any other appliance.
- The stated clearances to combustibles represents a surface temperature of 90° F (50°C) above room temperature. Building materials with a low heat tolerance (such as plastics, vinyl siding, canvas, triply, etc) may be subject to degradation at lower temperatures. It is the installer's responsibility to assure that adjacent materials are protected from degradation.
- Maintain clearances from heat sensitive equipment and workstations.
- Maintain clearances from vehicles parked below the heater.
- Maintain clearances from swinging and overhead doors, overhead cranes, vehicle lifts, partitions, storage racks, hoists, building construction, etc.
- In locations used for the storage of combustible materials, signs must be posted to specify the maximum permissible stacking height to maintain required clearances from the heater to the combustibles. Signs must be posted adjacent to the heater thermostat. In the absence of a thermostat, signs must be posted in a conspicuous location.
- Consult local Fire Marshal, Fire Insurance Carrier or other authorities for approval of proposed installation when there is a possibility of exposure to combustible airborne materials or vapors.
- Hang heater in accordance to the minimum suspension requirements *on Page 16, Figure 14*.
- If the radiant tubes must pass through the building structure, be sure that adequate sleeving and fire stop is installed to prevent scorching and/or fire hazard.

NOTE: 1. All dimensions are from the surfaces of all tubes, couplings and elbows.
2. Clearances B, C and D can be reduced by 50% after 25' (7.5 m) of tubing downstream from where the burner and burner tube connect.

FIGURE 3: STANDARD REFLECTOR

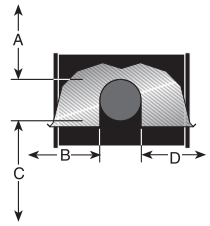

Model	(inches) A	B	C	D	(centimeters) A	B	C	D
ET3-40	6	27	53	27	16	69	135	69
ET3-60	6	35	63	35	16	89	161	89
ET3-80	6	38	66	38	16	97	168	97
ET3-100	6	40	71	40	16	102	181	102
ET3-125	6	46	77	46	16	117	196	117
ET3-150	6	50	80	50	16	127	204	127
ET3-175	8	52	82	52	21	133	209	133

FIGURE 4: ONE SIDE REFLECTOR

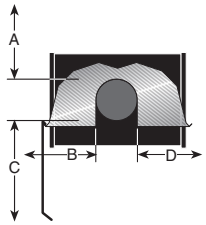

Model	(inches) A	B	C	D	(centimeters) A	B	C	D
ET3-40	6	9	53	44	16	23	135	112
ET3-60	6	9	63	47	16	23	161	120
ET3-80	6	9	70	54	16	23	178	138
ET3-100	6	9	77	59	16	23	196	150
ET3-125	6	9	83	65	16	23	211	166
ET3-150	6	9	86	69	16	23	219	176
ET3-175	8	9	88	73	21	23	224	186

FIGURE 5: TWO SIDE REFLECTORS

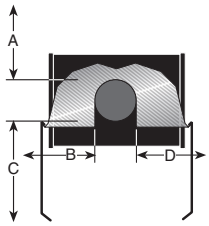

Model	(inches) A	B	C	D	(centimeters) A	B	C	D
ET3-40	6	15	53	15	16	39	135	39
ET3-60	6	23	66	23	16	59	168	59
ET3-80	6	25	72	25	16	64	183	64
ET3-100	6	27	78	27	16	69	199	69
ET3-125	6	32	84	32	16	82	214	82
ET3-150	6	35	88	35	16	89	224	89
ET3-175	8	40	91	40	21	102	232	102

NOTE: 1. All dimensions are from the surfaces of all tubes, couplings and elbows.
2. Clearances B, C and D can be reduced by 50% after 25' (7.5 m) of tubing downstream from where the burner and burner tube connect.

FIGURE 6: 45° TILT REFLECTOR

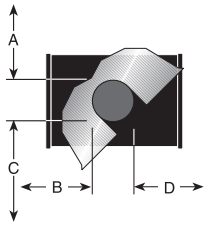

Model	(inches) A	B	C	D	(centimeters) A	B	C	D
ET3-40	8	8	51	46	21	21	130	117
ET3-60	8	8	60	54	21	21	153	138
ET3-80	8	8	66	60	21	21	168	153
ET3-100	10	8	74	64	26	21	188	163
ET3-125	10	8	78	69	26	21	199	176
ET3-150	12	8	84	74	31	21	214	188
ET3-175	12	8	85	79	31	21	216	201

FIGURE 7: U-TUBE, STANDARD REFLECTOR

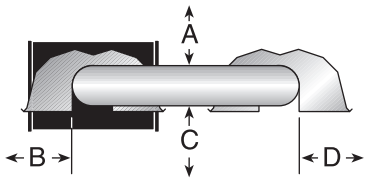

Model	(inches) A	B	C	D	(centimeters) A	B	C	D
ET3-40	- UNAPPROVED -				- UNAPPROVED -			
ET3-60	6	35	63	30	16	89	161	77
ET3-80	6	38	69	37	16	97	176	94
ET3-100	6	40	76	39	16	102	194	100
ET3-125	6	46	79	43	16	117	201	110
ET3-150	6	50	84	47	16	127	214	120
ET3-175	8	54	87	51	21	138	221	130

FIGURE 8: U-TUBE, 45°

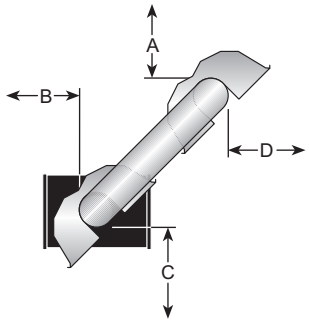

Model	(inches) A	B	C	D	(centimeters) A	B	C	D
ET3-40	- UNAPPROVED -				- UNAPPROVED -			
ET3-60	8	8	60	42	21	21	153	107
ET3-80	8	8	66	46	21	21	168	117
ET3-100	8	8	74	52	21	21	188	133
ET3-125	8	8	78	61	21	21	199	155
ET3-150	8	8	84	66	21	21	214	168
ET3-175	8	8	85	70	21	21	216	178

NOTE: 1. All dimensions are from the surfaces of all tubes, couplings and elbows.
2. Clearances B, C and D can be reduced by 50% after 25' (7.5 m) of tubing downstream from where the burner and burner tube connect.

FIGURE 9: U-TUBE, OPPOSITE 45° REFLECTOR

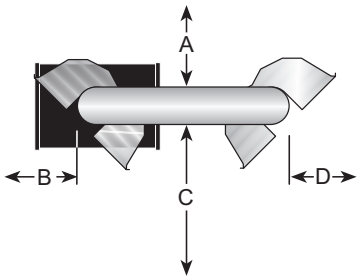

Model	(inches) A	B	C	D	(centimeters) A	B	C	D
ET3-40	- UNAPPROVED -				- UNAPPROVED -			
ET3-60	8	54	60	22	21	138	153	56
ET3-80	8	60	66	22	21	153	168	56
ET3-100	10	64	74	22	26	163	188	56
ET3-125	10	70	78	22	26	178	199	56
ET3-150	12	74	84	22	31	188	214	56
ET3-175	12	76	85	22	31	194	216	56

FIGURE 10: 2-FOOT DECO GRILLE AND PROTECTIVE GRILLE

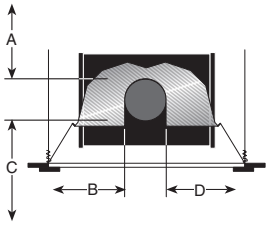

Model	(inches) A	B	C	D	(centimeters) A	B	C	D
ET3-40	6	27	53	27	16	69	135	69
ET3-60	6	35	63	35	16	89	161	89
ET3-80	6	38	66	38	16	97	168	97
ET3-100	6	40	71	40	16	102	181	102
ET3-125	6	46	77	46	16	117	196	117
ET3-150	6	50	80	50	16	127	204	127
ET3-175	8	52	82	52	21	133	209	133

FIGURE 11: LOWER CLEARANCE SHIELD*

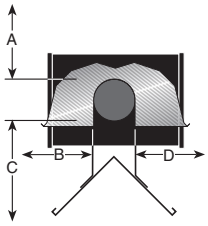

Model	(inches) A	B	C	D	(centimeters) A	B	C	D
ET3-40	6	34	27	34	16	87	69	87
ET3-60	6	39	33	39	16	100	84	100
ET3-80	6	40	38	40	16	102	97	102
ET3-100	6	50	44	50	16	127	112	127
ET3-125	6	54	48	54	16	138	122	138
ET3-150	6	55	50	55	16	140	127	140
ET3-175	- UNAPPROVED -				- UNAPPROVED -			

*When installed in the first 10' (3 m).

NOTE: 1. All dimensions are from the surfaces of all tubes, couplings and elbows.
2. Clearances B, C and D can be reduced by 50% after 25' (7.5 m) of tubing downstream from where the burner and burner tube connect.

FIGURE 12: VENTING

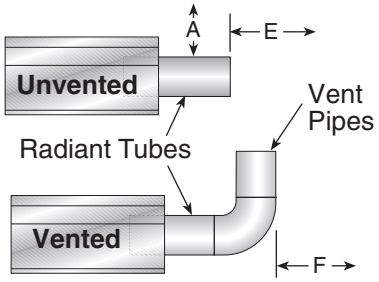

Model	(inches) A	E	F	(centimeters) A	E	F
ET3-40	14	18	18	36	46	46
ET3-60	14	18	18	36	46	46
ET3-80	20	24	18	51	61	46
ET3-100	20	24	18	51	61	46
ET3-125	20	24	18	51	61	46
ET3-150	20	30	18	51	77	46
ET3-175	20	30	18	51	77	46

SECTION 4: NATIONAL STANDARDS AND APPLICABLE CODES

4.1 Gas Codes

The type of gas appearing on the nameplate must be the type of gas used. Installation must comply with national and local codes and requirements of the local gas company.

United States: Refer to National Fuel Gas Code NFPA 54/ANSI Z223.1 - latest revision.

Canada: Refer to Natural Gas and Propane Installation Code CSA B149.1 - latest revision.

4.2 Aircraft Hangars

Installation in aircraft hangars must be in accordance with the following codes:

United States: Refer to Standard for Aircraft Hangars, NFPA 409 - latest revision.

Canada: Refer to Natural Gas and Propane Installation Code CSA B149.1 - latest revision.

In aircraft storage and servicing areas, heaters shall be installed at least 10' (3 m) above the upper surface of wings or of engine enclosures of the highest aircraft which may be housed in the hangar. The measurement shall be made from the wing or engine enclosure (whichever is higher from the floor) to the bottom of the heater.

• In shops, offices and other sections of aircraft hangars communicating with aircraft storage or servicing areas, heaters shall be installed not less than 8' (2.4 m) above the floor.

• Suspended or elevated heaters shall be so located in all spaces of aircraft hangars that they shall not be subject to injury by aircraft, cranes, movable scaffolding or other objects. Provisions shall be made to assure accessibility to suspended heaters for recurrent maintenance purposes.

4.3 Public Garages

Installation in garages must be in accordance with the following codes:

United States: Refer to Standard for Parking Structures NFPA 88A - latest revision or the Code for Motor Fuel Dispensing Facilities and Repair Garages, NFPA 30A - latest revision.
Canada: Refer to Natural Gas and Propane Installation Code CSA B149.1 - latest revision.

• Heaters must not be installed less than 8' (2.4 m) above the floor. Minimum clearances to combustibles must be maintained from vehicles parked below the heater.

• When installed over hoists, minimum clearances to combustibles must be maintained from the upper most point of objects on the hoist.

4.4 Electrical

The heater must be electrically grounded in accordance with the following codes:

United States: Refer to National Electrical Code®, NFPA 70 - latest revision. Wiring must conform to the most current National Electrical Code®, local ordinances and any special diagrams furnished.

Canada: Refer to Canadian Electrical Code, CSA C22.1 Part 1 - latest revision.

4.5 Venting

The venting must be installed in accordance with the requirements within this manual and the following codes:

United States: Refer to National Fuel Gas Code NFPA 54/ANSI Z223.1 - latest revision.

Canada: Refer to Natural Gas and Propane Installation Code CSA B149.1 - latest revision.

4.6 High Altitude

These heaters are approved for installations up to 2000' (610 m)(US), 4500' (1370 m)(Canada) without modification. Consult factory if US installation is above 2000' (610 m) or Canadian installation is above 4500' (1370 m).

SECTION 5: MAJOR COMPONENTS

FIGURE 13: Major Component Descriptions

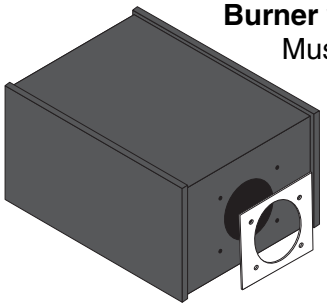

Burner with Tube Gasket
Must be installed with the flame observation window facing down.

Reflector (Stainless Steel or Aluminum)
Alternate overlap as shown on overview and *on Page 19, Figure 17*. Minimum overlap is 6" (16 cm).

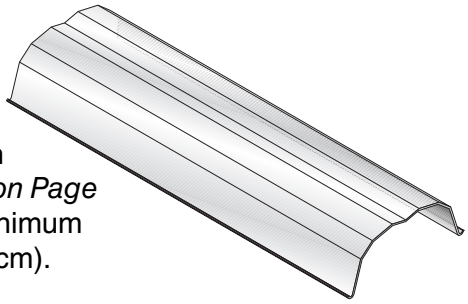

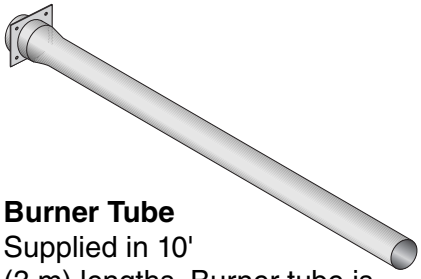

Burner Tube
Supplied in 10' (3 m) lengths. Burner tube is always the first tube after the burner.

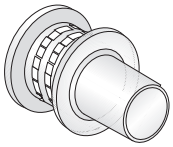

Vent Cap
Attach at flue end and air inlet with vent adapter, where required.

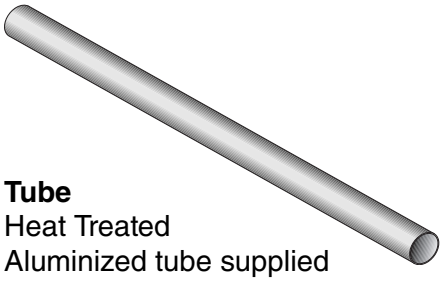

Tube
Heat Treated Aluminized tube supplied in 10' (3 m) lengths.

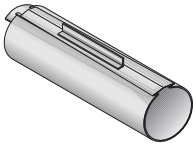

Coupling Assembly with Lock

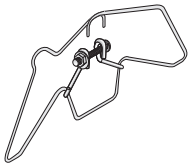

Tube and Reflector Hanger with Clamp Package
Position this hanger no more than 4" (10 cm) away from the burner.

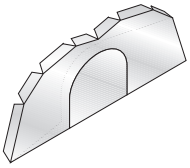

Reflector End Cap
Punch out center section to accommodate tube.

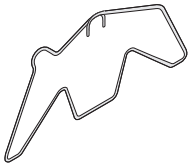

Tube and Reflector Hanger
Suspend system from these hangers.

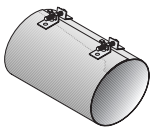

Vent Adapter

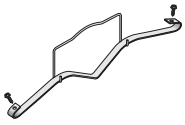

Reflector Support Strap & Wire Form

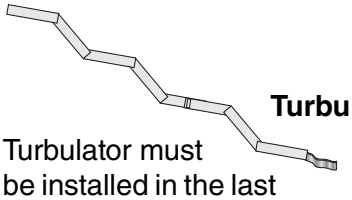

Turbulator

Turbulator must be installed in the last standard section of tube. Turbulator is not required on the ET3-125/150/175. For installation *see Page 22, Section 6.5*.

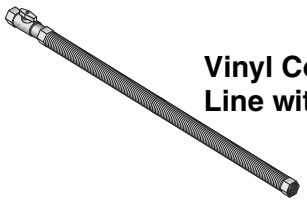

Vinyl Coated Flex Gas Line with Shut Off Cock

5.1 Standard Parts List

Table 1: Contents of Heater Burner Carton

Part No.	Description	ET3-40	ET3-60	ET3-80	ET3-100	ET3-125	ET3-150	ET3-175
ET332XXXXX	Burner Assembly (Rate and Fuel Varies)	1	1	1	1	1	1	1
02568200	Gasket (Burner to Burner Tube)	1	1	1	1	1	1	1
132100NA	Installation, Operation and Service Manual	1	1	1	1	1	1	1
94273914	Hex Head Bolts 5/16-18 Rolok	4	4	4	4	4	4	4
96411600	Split Lock washer	4	4	4	4	4	4	4
91221100	Nipple 1/2" NPT x 4" Galv.	1	1	1	1	1	1	1
91317300	1/4" Quick Disconnect (Wire)	2	2	2	2	2	2	2
*91412204	Vinyl Coated Flexible Gas Connector Assembly - 3/4" NPT	1	1	1	1	1	1	1
03051503	Turbulator Adapter	1	1	1	1	-	-	-
03051504	Turbulator Aluminized Steel	2	4	4	2	-	-	-
03051505	Turbulator Stainless Steel	1	-	-	-	-	-	-

*Canadian Models: Rubber (Type 1) Gas Hoses available as an accessory. *See Page 44, Section 9.*

Table 2: Contents of Core and Extension Packages

		Core Packages								Extension Packages							
		Aluminized with Aluminum Reflector				Aluminized with Stainless Steel Reflector				Aluminized with Aluminum Reflector				Aluminized with Stainless Steel Reflector			
Part No.	Description	10' (3 m)	20' (6 m)	30' (9 m)	40' (12 m)	10' (3 m)	20' (6 m)	30' (9 m)	40' (12 m)	10' (3 m)	20' (6 m)	30' (9 m)	40' (1 2m)	10' (3 m)	20' (6 m)	30' (9 m)	40' (12 m)
91409408	Tube, HT Aluminized, 10' (3 m)	-	1	2	3	-	1	2	3	1	2	3	4	1	2	3	4
03051101	Burner Tube, ALUMI-THERM® Steel, 10' (3 m)	-	-	1	1	-	-	1	1	-	-	-	-	-	-	-	-
03051601	Burner Tube, HT ALUMI-THERM® Steel, 10' (3 m)	1	1	-	-	1	1	-	-	-	-	-	-	-	-	-	-
01312700	Coupling Assembly	-	1	2	3	-	1	2	3	1	2	3	4	1	2	3	4
02750303	Standard Reflector, 8' (3.5 m)	2	3	4	6	-	-	-	-	2	3	4	6	-	-	-	-
027503SS*	Stainless Steel Reflector, 8' (3.5 m)	-	-	-	-	2	3	4	6	-	-	-	-	2	3	4	6
02750800	End Cap	2	2	2	2	-	-	-	-	-	-	-	-	-	-	-	-
027508SH*	Stainless Steel End Cap with Hole	-	-	-	-	2	2	2	2	-	-	-	-	-	-	-	-
03090100	Tube and Reflector Hanger	2	3	4	5	2	3	4	5	1	2	3	4	1	2	3	4
91907302	S-Hook	2	3	4	5	2	3	4	5	1	2	3	4	1	2	3	4
03050010	Reflector Support Package (Strap, Wire Form, Screws)	1	2	3	5	2	4	5	7	2	3	4	6	2	3	4	6
91107720	U-Clip Package	1	1	1	1	1	1	1	1	1	1	1	1	1	1	1	1
90502700	Vent Adapter	1	1	1	1	1	1	1	1	-	-	-	-	-	-	-	-
01318901	Tube Clamp Package	1	1	1	1	2	2	2	2	-	-	-	-	-	-	-	-
	Part Number	CP10ALUM	CP20ALUM	CP30ALUM	CP40ALUM	CP10ALUMSS	CP20ALUMSS	CP30ALUMSS	CP40ALUMSS	EXP10ALUM	EXP20ALUM	EXP30ALUM	EXP40ALUM	EXP10ALUMSS	EXP20ALUMSS	EXP30ALUMSS	EXP40ALUMSS

* Optional with the aluminized core package.

Table 3: Component Package Guide

Model	Tubing Length	Core and Extension Packages	
		Aluminized	Stainless Steel
ET3-40	10' (3 m)	CP10ALUM	CP10ALUMSS
ET3-60	20' (6 m)	CP20ALUM	CP20ALUMSS
ET3-80	20' (6 m)	CP20ALUM	CP20ALUMSS
ET3-100	30' (9 m)	CP30ALUM	CP30ALUMSS
ET3-125	40' (12 m)	CP40ALUM	CP40ALUMSS
ET3-150	50' (15 m)	CP30ALUM + EXP20ALUM	CP30ALUMSS+ EXP20ALUMSS
ET3-175	60' (18 m)	CP30ALUM + EXP30ALUM	CP30ALUMSS + EXP30ALUMSS

Table 4: Accessories Package (03200001)

Part No.	Description	Quantity
90502300	4" Metalbestos Vent Cap	2
90502700	Vent Adapter	1

Additional tubing length may be added to heater. Tubing must be heat-treated, aluminized or porcelain coated. Any additional tubing lengths are considered as vent length for length determination. Maximum venting length for minimum heater length is 45' (13.7 m) total.

SECTION 6: HEATER INSTALLATION

⚠ WARNING

Severe Injury Hazard

Secure burner to burner tube with bolts and lockwashers.

Hang heater with materials with a minimum working load of 75 lbs (33 kg).

Failure to follow these instructions can result in death, injury or property damage.

⚠ WARNING

Cut/Pinch Hazard

Wear protective gear during installation, operation and service.

Edges are sharp.

Failure to follow these instructions can result in injury.

To ensure your safety, and comply with the terms of the warranty, all units must be installed in accordance with these instructions.

The gas or the electrical supply lines must not be used to support the heater.

Do not locate the gas or electric supply lines directly over the path of the flue products from the heater.

The heater must be installed in a location that is readily accessible for servicing.

The heaters must be installed in accordance with clearances to combustibles as indicated on the rating plate and in this instruction manual.

The minimum and maximum gas inlet pressures must be maintained as indicated on the rating plate.

Typical installation configurations are shown in *Figure 14*.

Expansion and contraction of the tube dictates that the minimum suspension lengths in the table *on Page 16, Figure 14* be maintained.

FIGURE 14: Critical Hanger Placement (Indoor Installation)

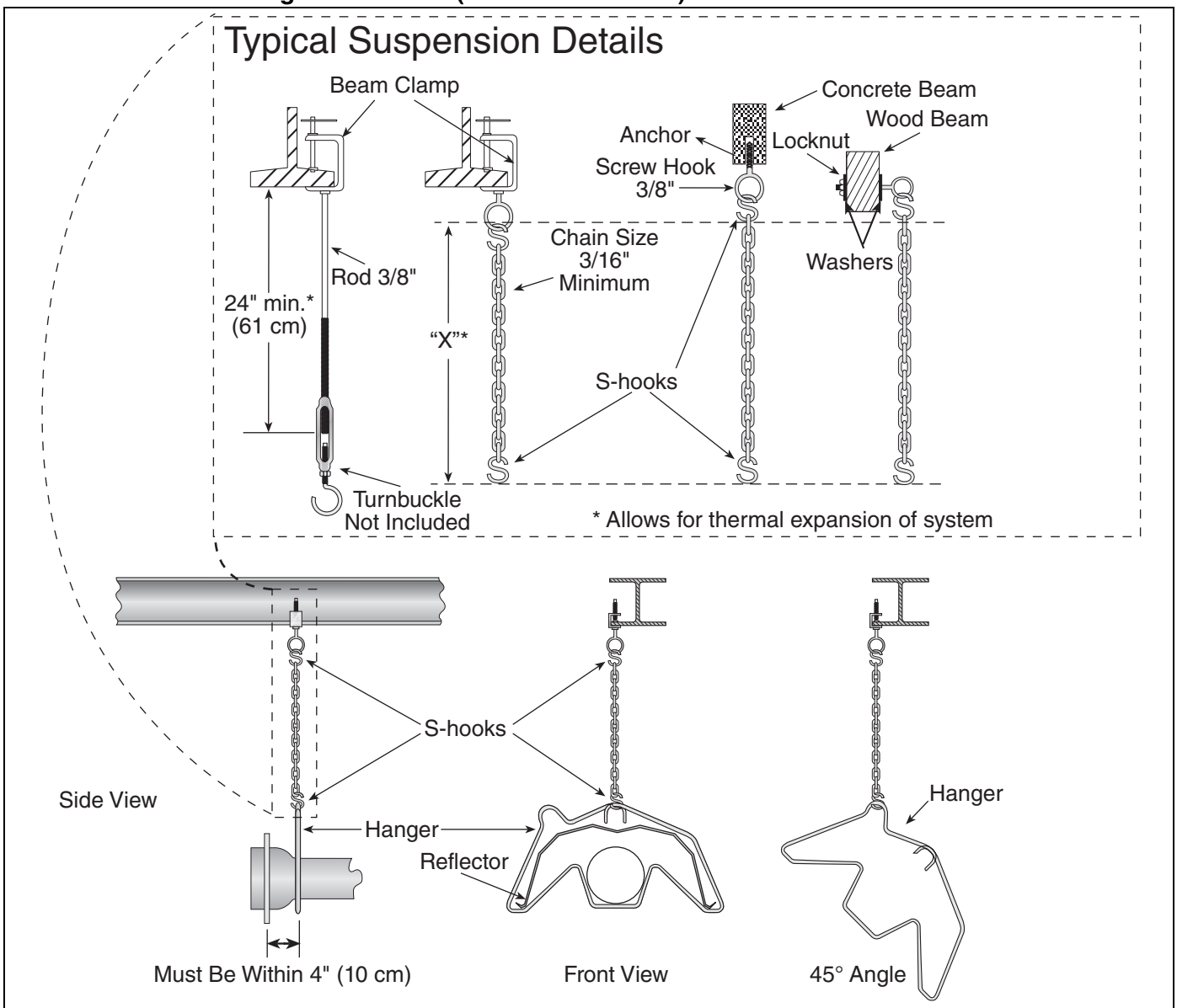

Description	Part Number
S-Hook	91907302
Tube/Reflector Hanger	03090100

Run Length	Typical Expansion	Minimum "X" Length
10' - 50' (3 m-15 m)	±1" (3 cm)	12' (30 cm)
51' - 60' (15.5 m-18 m)	±2" (5 cm)	18' (46 cm)
61' - 70' (18.5 m-21 m)	±3" (8 cm)	24' (61 cm)

6.1 Outdoor Mounting

The heater is meant for stationary mounting in all situations and should not be suspended from any structure which may become mobile or from any organic structures such as trees. Clearances to combustibles must be maintained in all cases; do not install heaters in a location such as a parking area, where a vehicle with a painted or non-metallic uppersurface, may be parked within the clearances to combustibles.

The bottom of the combustion air inlet shall not be less than 12" (30 cm) above a surface which could support snow, ice, or debris. *See Page 17, Figure 15*.

FIGURE 15: Critical Hanger Placement (Outdoor Installation)

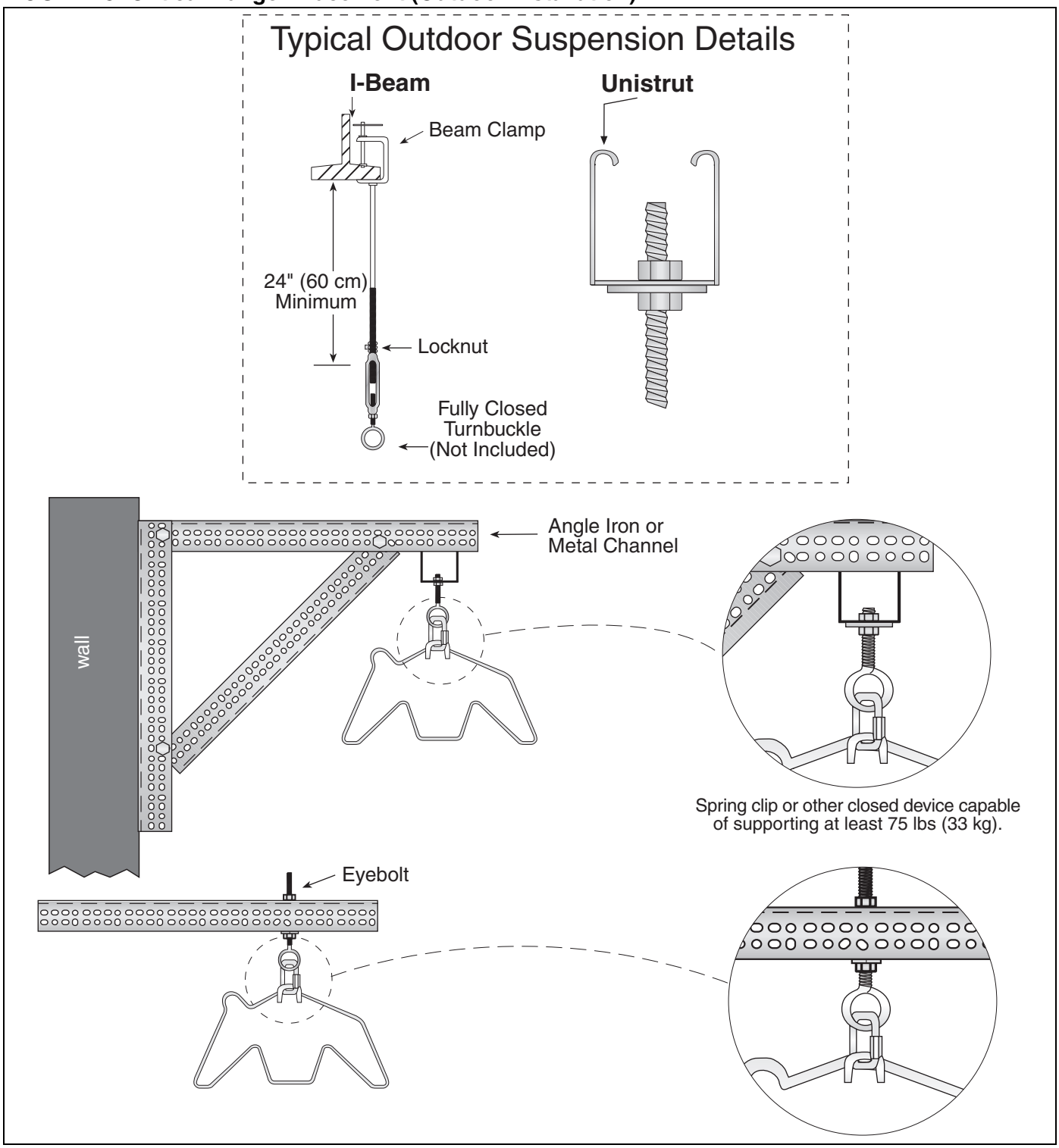

FIGURE 16: Linear Heater Assembly Overview

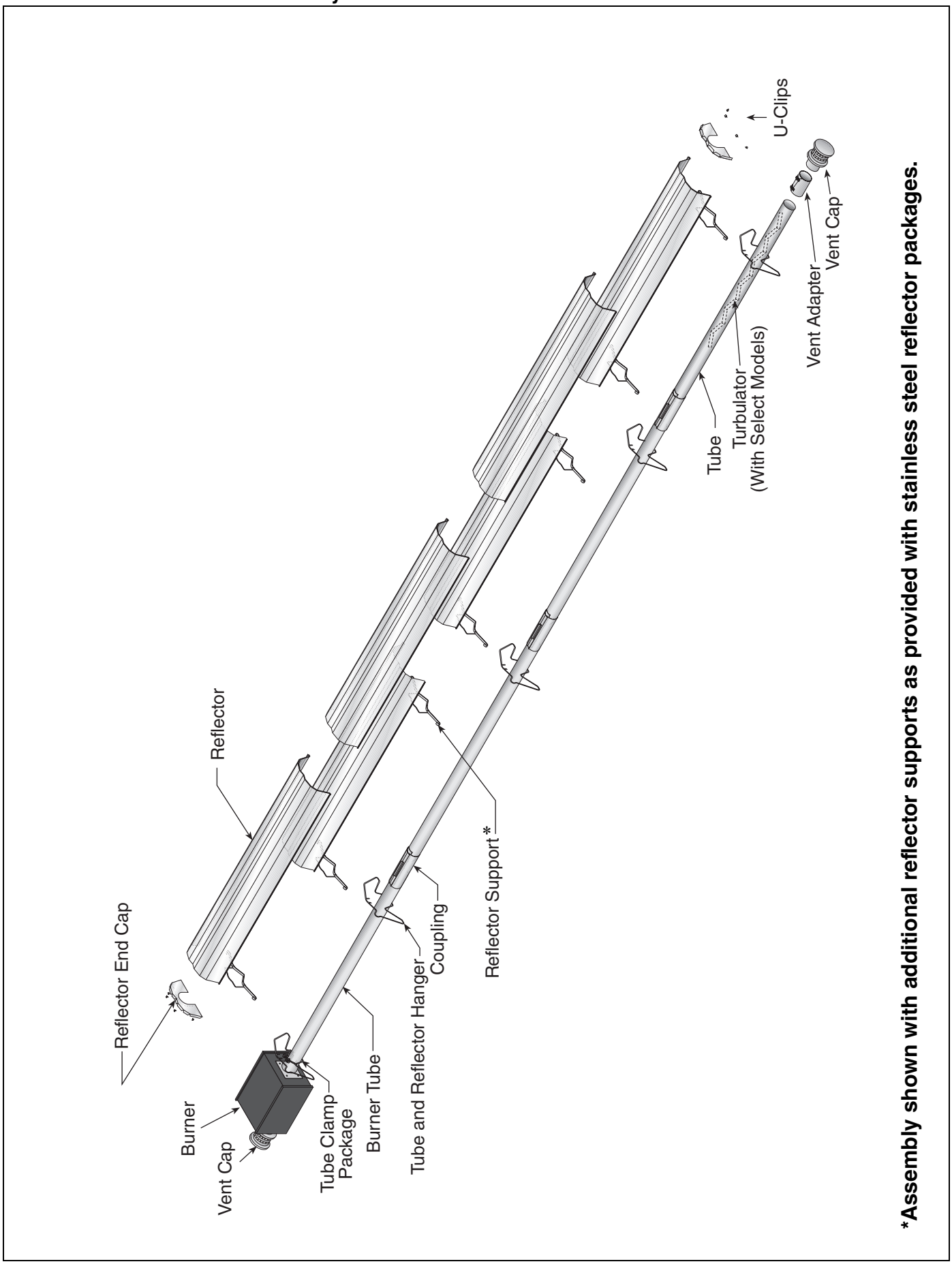

***Assembly shown with additional reflector supports as provided with stainless steel reflector packages.**

FIGURE 17: Linear Heater Layout Overview

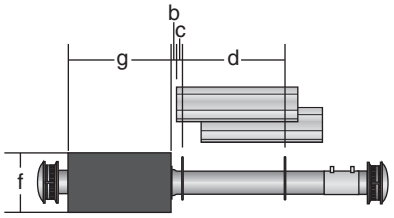

ET3-40 10' (3 m) Tube Length

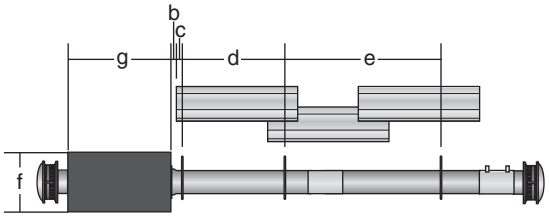

ET3-60
ET3-80 20' (6 m) Tube Length

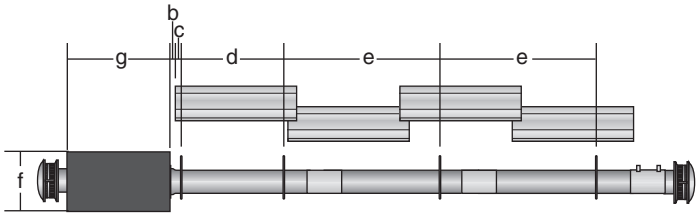

ET3-100 30' (9 m) Tube Length

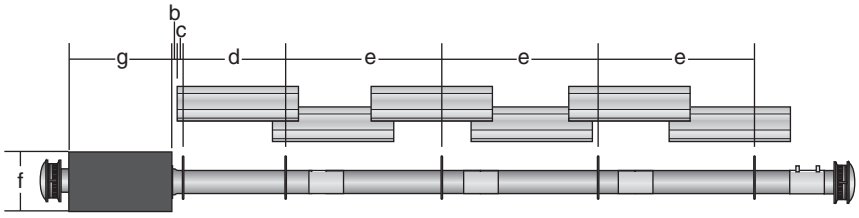

ET3-125 40' (12 m) Tube Length

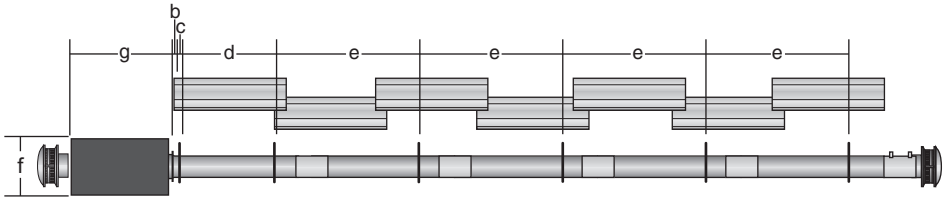

ET3-150 50' (15 m) Tube Length

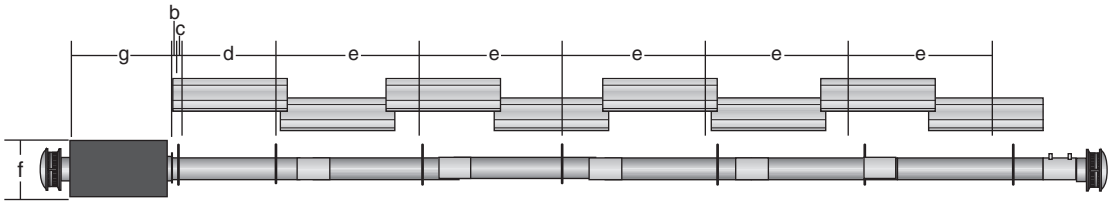

ET3-175 60' (18 m) Tube Length

LEGEND

- Burner
- Reflector
- Tube
- Tube/Reflector Hanger
- Coupling Assembly
- Vent Adapter

a = 14" (36 cm)
reflector width (not shown)

b = 2" (5 cm)
end cap to burner

c = 2" (5 cm)
end cap to hanger

d = 7'6" (229 cm)
distance first hanger

e = 10' (3 m)
distance between hangers

f = 9.5" (24 cm)
burner height

g = 17.5" (44 cm)
burner length

Step 6.2 Burner Tube Installation

Hanging hardware shown is for indoor installation only. *See Page 17, Figure 15* for outdoor suspension details.

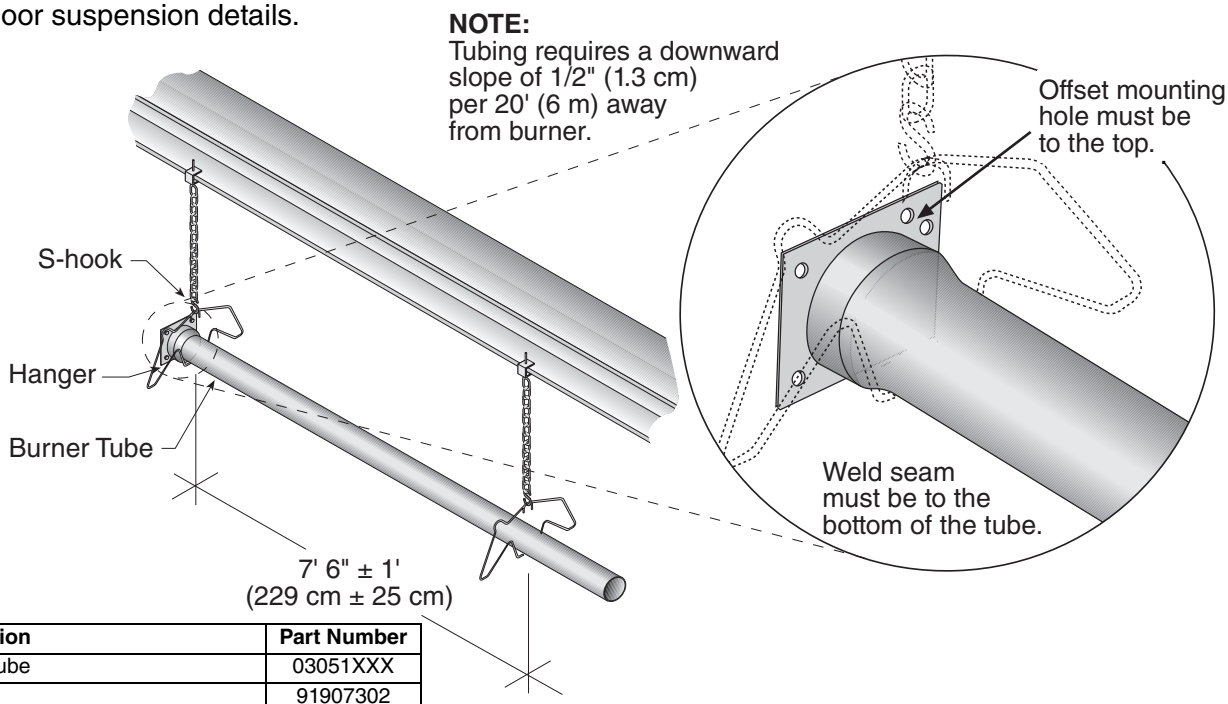

Description	Part Number
Burner Tube	03051XXX
S-Hook	91907302
Tube/Reflector Hanger	03090100

Step 6.3 Tube Clamp Package Installation

Hanging hardware shown is for indoor installation only. *See Page 17, Figure 15* for outdoor suspension details.

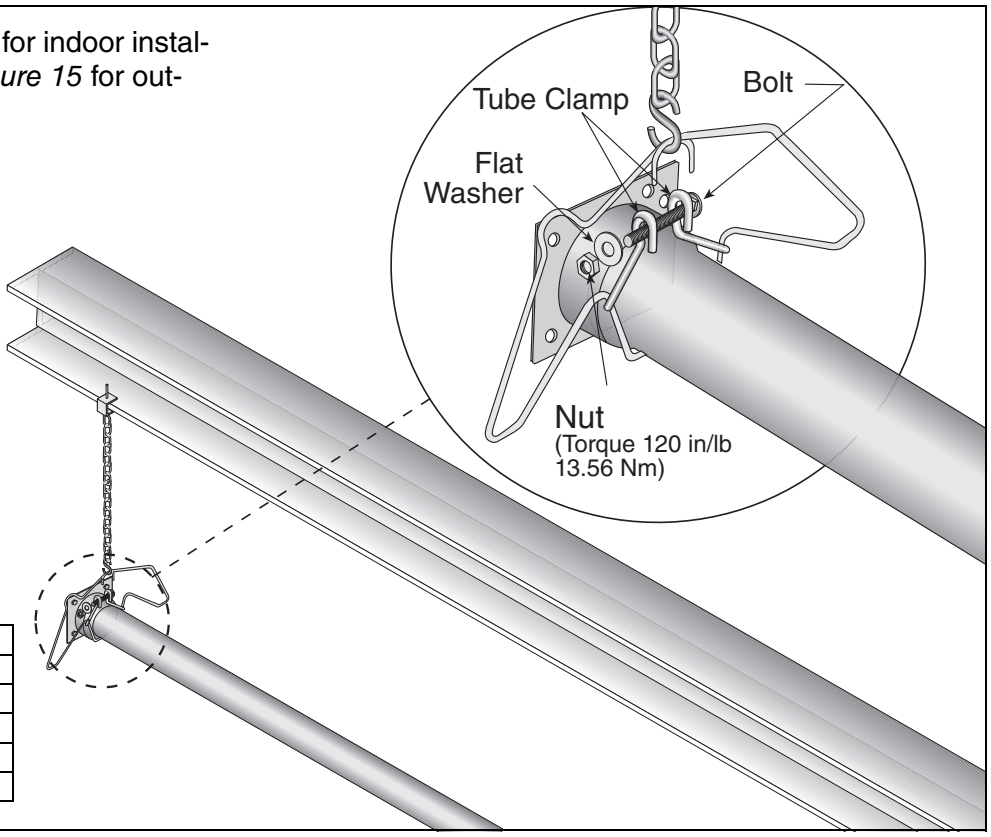

Description	Part Number
Tube Clamp Package	**01318901**
Tube Clamp	01396801
Bolt	97113940
Flat Washer	95211600
Nut	92113900

Step 6.4 Coupling and Tube Assembly

A Close coupling with tab

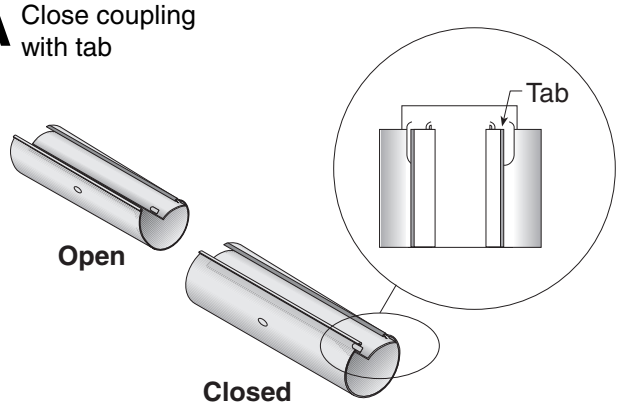

B Start Slide bar/Coupling Lock onto coupling

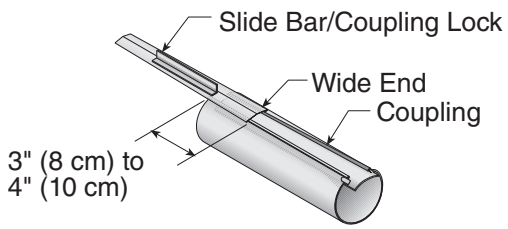

C Insert tubes into coupling

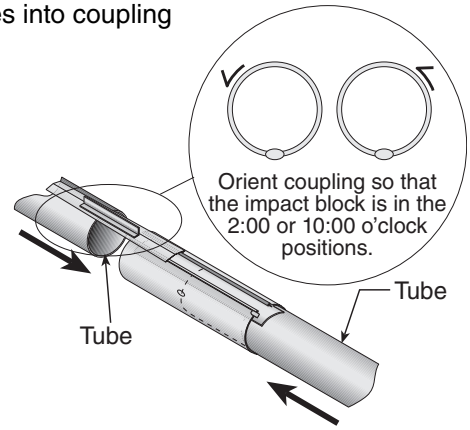

D Tighten coupling to join tubes

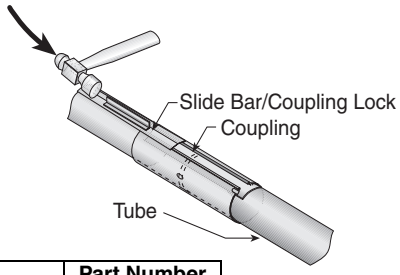

Description	Part Number
Coupling	01329600
Slide bar/Coupling Lock	01329700
Tube	91409XXX

Step 6.4.1 Coupling and Tube Assembly (Continued)

Tighten slide bar as shown below

Drive slide bar until tight.
End of slide bar should be
within tolerance listed below.

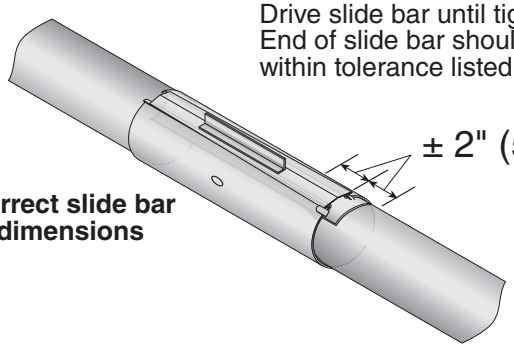

Correct slide bar dimensions

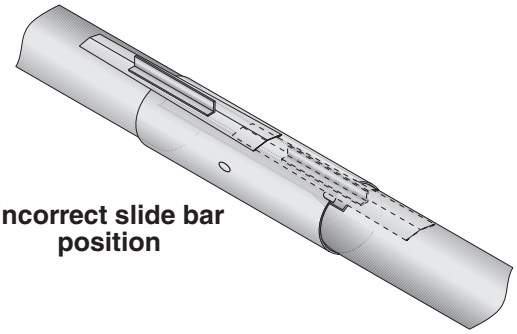

Incorrect slide bar position

- **Repeat Step 6.4 A - D until all tubes are assembled.** ***See Page 22, Section 6.4.2*****.**

Step 6.4.2 Coupling and Tube Assembly (Continued)

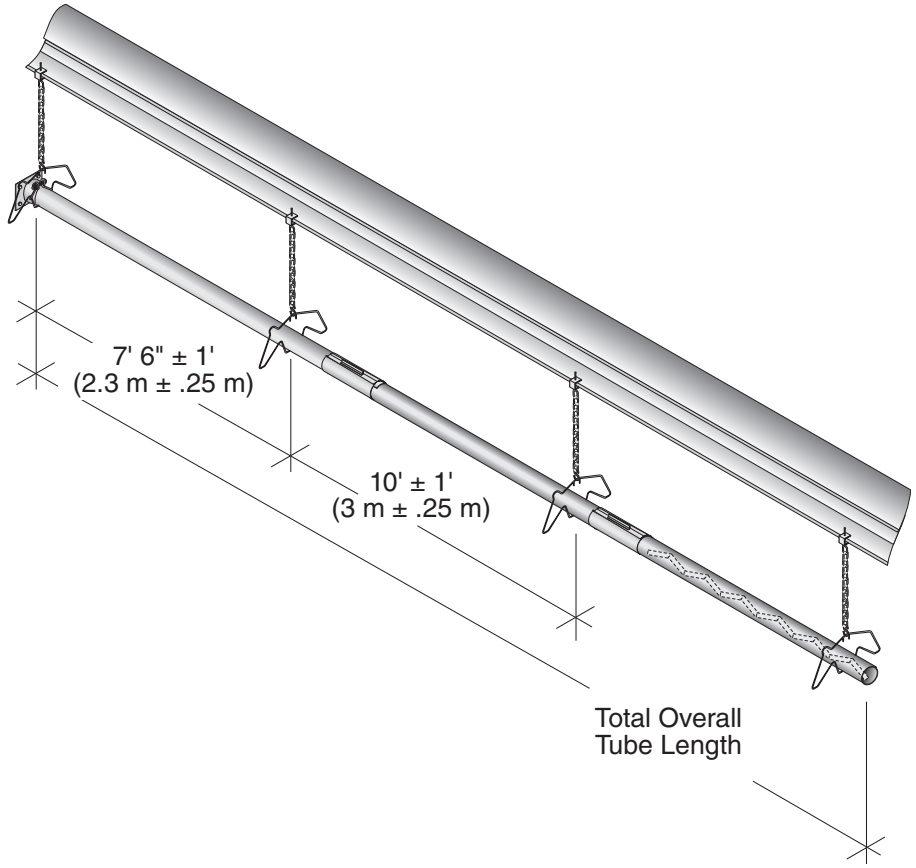

Model	Tube Length
ET3-40	10' (3 m)
ET3-60	20' (6 m)
ET3-80	20' (6 m)
ET3-100	30' (9 m)
ET3-125	40' (12 m)
ET3-150	50' (15 m)
ET3-175	60' (18 m)

Hanging hardware shown is for indoor installation only. *See Page 17, Figure 15* for outdoor suspension details.

Step 6.5 Turbulator Installation

Turbulator must be installed in the last standard section of tube. Turbulator is not required on the ET3-125/150/175.

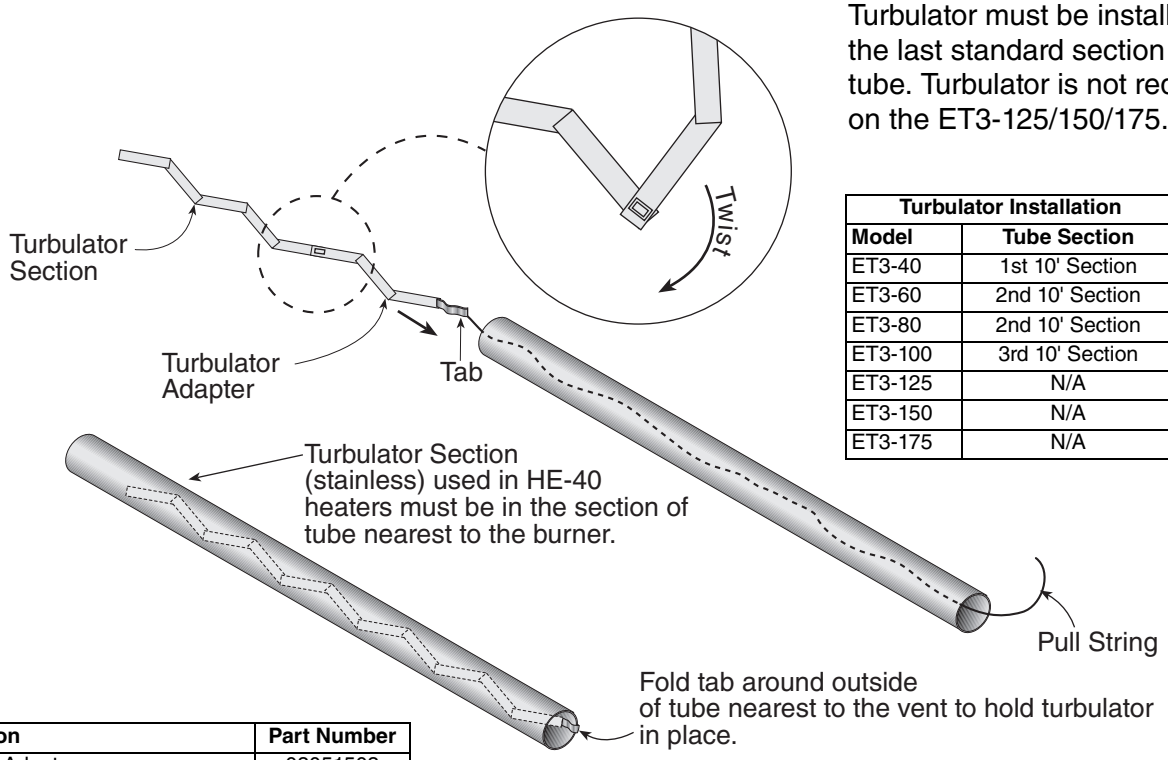

Turbulator Installation	
Model	**Tube Section**
ET3-40	1st 10' Section
ET3-60	2nd 10' Section
ET3-80	2nd 10' Section
ET3-100	3rd 10' Section
ET3-125	N/A
ET3-150	N/A
ET3-175	N/A

Description	Part Number
Turbulator Adapter	03051503
Turbulator Section	03051504
Turbulator Section (Stainless)	03051505
Tube	91409XXX

Step 6.6 Reflector Installation

⚠ WARNING

Fire Hazard

Support reflector with reflector hanger and support strap.

Reflector must not touch tube.

Failure to follow these instructions can result in death, injury or property damage.

NOTE: All tube surfaces must be covered by a reflector, except for a U-Tube.

Hanging hardware shown is for indoor installation only. *See Page 17, Figure 15* for outdoor suspension details.

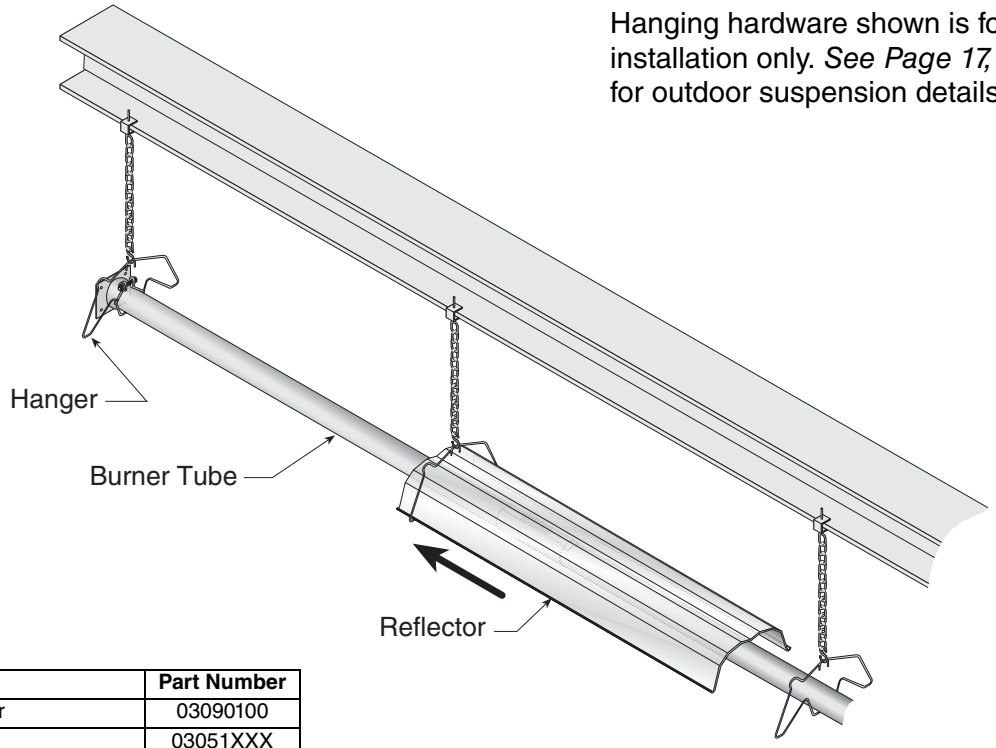

Description	Part Number
Tube/Reflector Hanger	03090100
Burner Tube	03051XXX
Reflector	02750303

Step 6.6.1 Reflector, U-Clip and Reflector Support Installation

The pictorial drawings of the heater construction in *Section 6* are schematic only and provide a general guideline of where hangers, reflector supports and U-clips are to be installed.

To ensure proper expansion and contraction movement of the reflectors, a combination of U-clips and reflector supports are used. The positioning of reflector supports and U-clips depends on the individual installation. Use either pop rivets or sheet metal screws instead of u-clips when installing end caps and joint pieces in areas where impact and high wind may be a factor. The following rules must be observed.

Hanging hardware shown is for indoor installation only. *See Page 17, Figure 15* for outdoor suspension details.

1. The first reflector after the burner must be affixed in the middle of the reflector with a reflector support and tight screws.

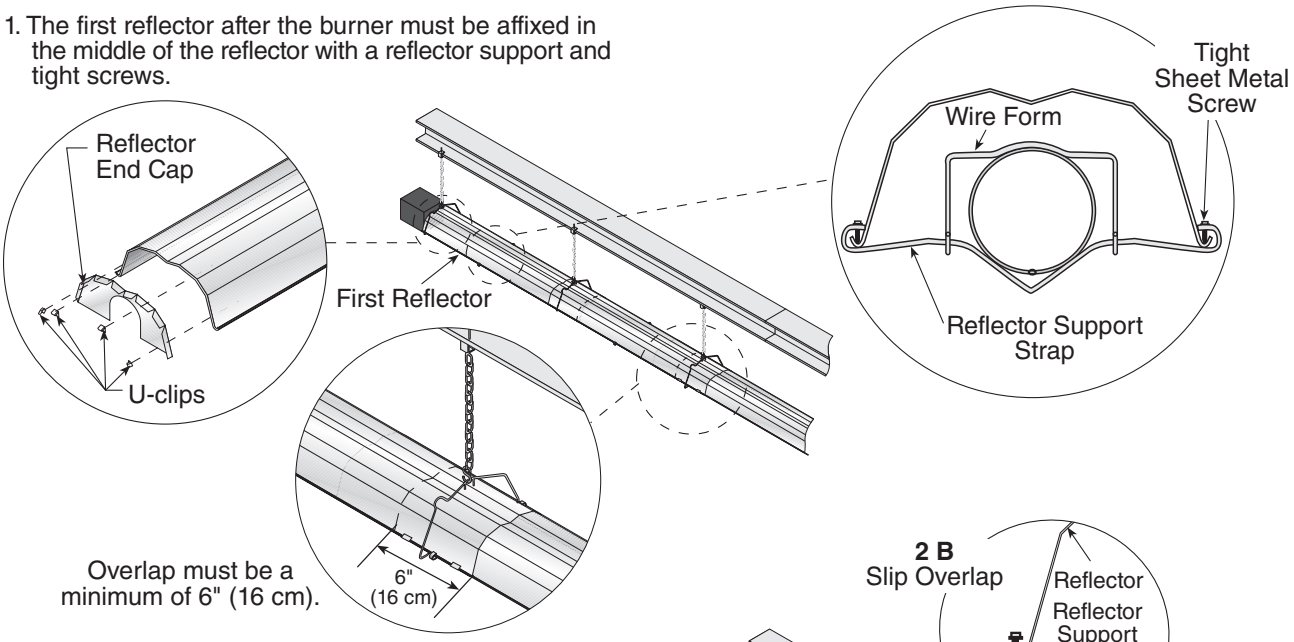

2. The overlap at the first and second reflector is a **slip overlap.** Thereafter, every third reflector joint is a slip overlap. A slip overlap is achieved by either:
   a.) both reflectors lay inside a hanger. (No reflector support needed.)
   b.) using a reflector support with loose screws at the reflector overlap.

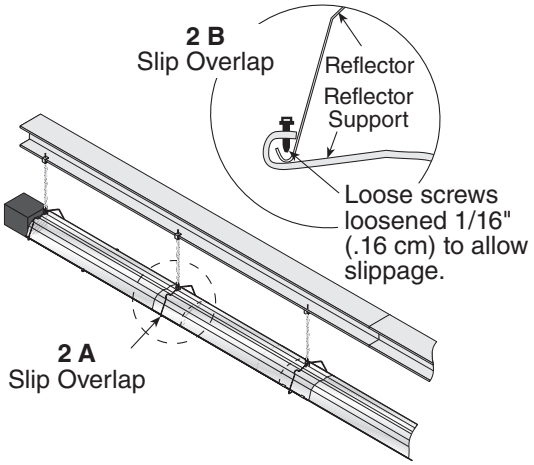

3. The remaining reflector overlaps require a **non-slip overlap** connection. To affix the reflectors together in a non-slip overlap either:
   a.) use reflector support and tight screws.
   b.) if both reflectors lay inside a hanger, u-clips or sheet metal screws may be used.

   This section of three reflectors joined together must be affixed to the tube with at least one reflector support with tight screws.

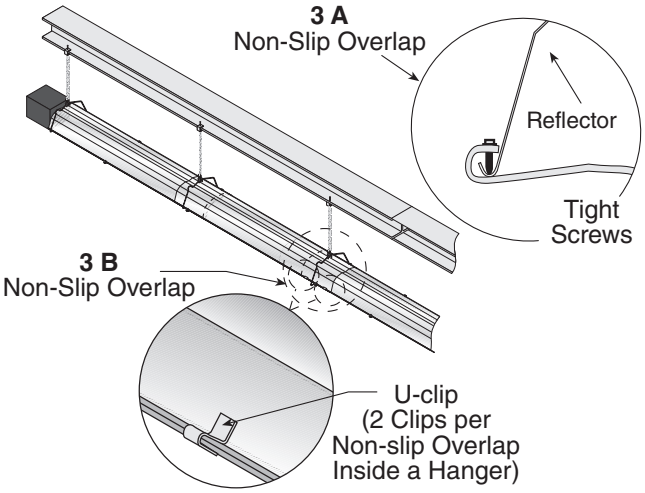

Description	Part Number
Reflector Support Package	**03050010**
Wire Form	91908004
Reflector Support Strap	03050000
Screw #8 x 3/4	94320812
U-Clip Package	91107720
Reflector End Cap	027508XX

Step 6.7 Burner Installation

Hanging hardware shown is for indoor installation only. *See Page 17, Figure 15* for outdoor suspension details.

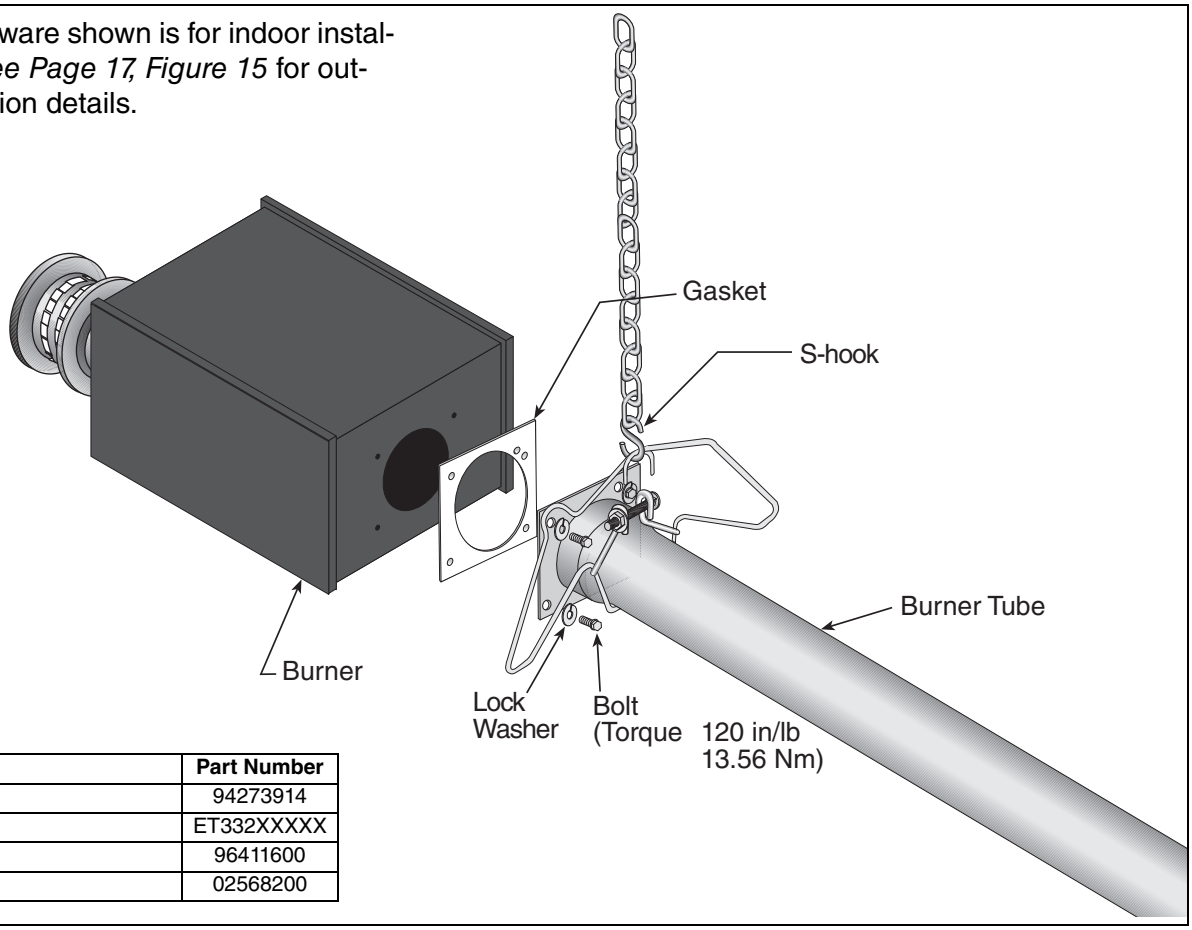

Description	Part Number
Bolt	94273914
Burner	ET332XXXXX
Lock Washer	96411600
Gasket	02568200

SECTION 7: OPTIONAL HEATER ACCESSORIES

⚠WARNING

Cut/Pinch Hazard

Wear protective gear during installation, operation and service.

Edges are sharp.

Failure to follow these instructions can result in injury.

7.1 U-Tube Configuration

Heaters (except ET3-40) are approved for optional U-Tube configurations.

The U-Tube may be installed in either a standard horizontal position, a 45° position or in an opposite 45° position as shown *on Page 8, Figure 7 through Figure 9*. When using a U-Tube configuration, the following additional rules must be adhered to:

- A minimum of 10' (3 m) on ET3-60/80 and a minimum of 15' (4.5 m) on ET3-100/125/150/175 is required between the burner and the U-Tube.
- The correct turbulator (*See Page 22, Figure 6.5*) must be installed in the last standard section of tube.
- The burner must never be operated in a tilted position.
- The heater must be properly supported at all locations. *See Page 28, Figure 19*.

FIGURE 18: U-Tube Heater Assembly Overview

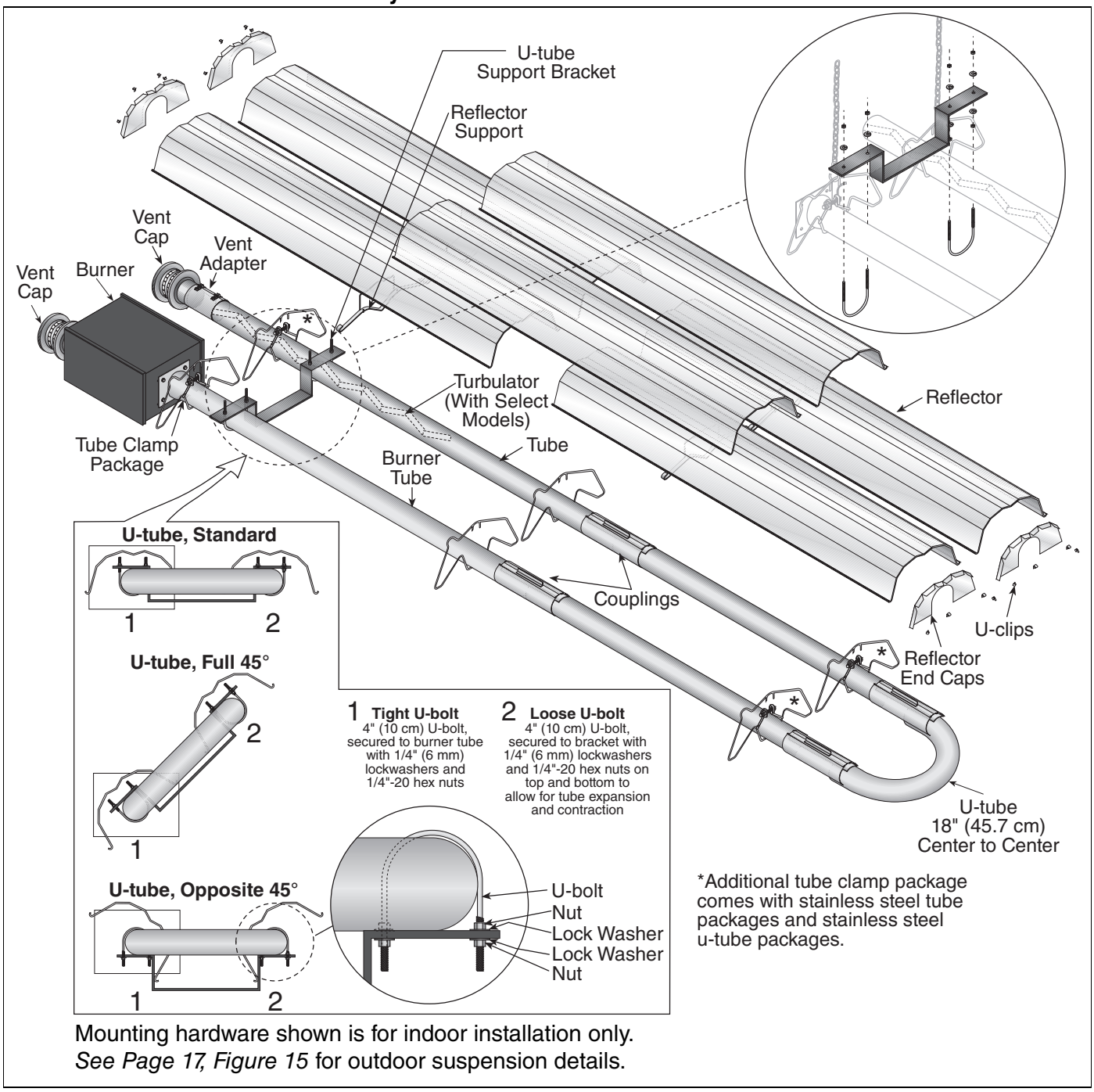

Mounting hardware shown is for indoor installation only.
See Page 17, Figure 15 for outdoor suspension details.

FIGURE 19: U-Tube heater Layout Overview

LEGEND

- Burner
- Reflector
- Tube 10' (3 m)
- Tube 5' (1.5 m)**
- Tube/Reflector Hanger
- Coupling Assembly
- U-tube

a = 14" (36 cm)
reflector width (not shown)

b = 2" (5 cm)
end cap to burner

c = 2" (5 cm)
end cap to hanger

d = 7'6" (2.3 m)
distance first hanger

e = 10' (3 m)
distance between hangers

f = 5' (1.5 m)
distance between last full tube hanger and half tube hanger

g = 17.5" (44 cm)
burner height

h = 9.5" (24 cm)
burner height

*Requires the last **reflector** before the u-tube to be cut in half for use on both sides.

Requires the last **tube before the u-tube to be cut in half for use on both sides.

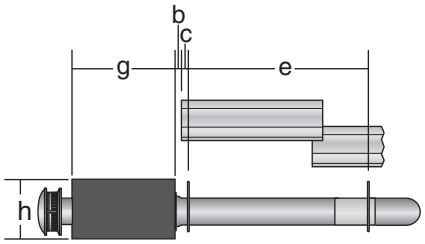

ET3-60
ET3-80 20' (6 m) Tube Length*

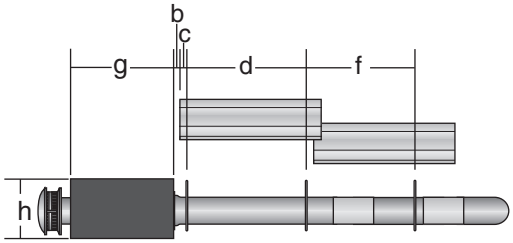

ET3-100 30' (9 m) Tube Length**

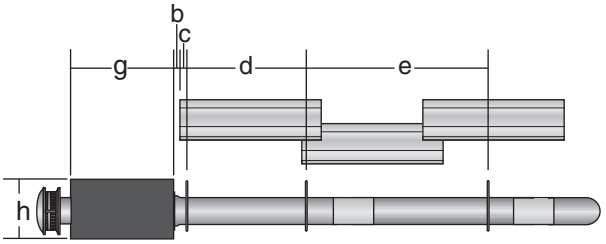

ET3-125 40' (12 m) Tube Length

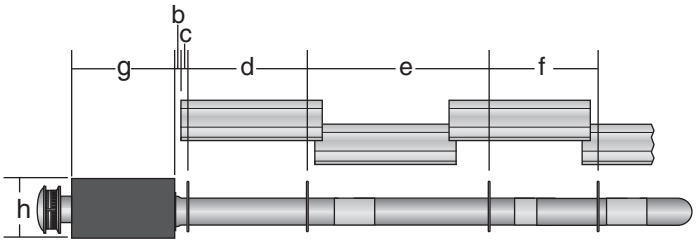

ET3-150 50' (15 m) Tube Length* **

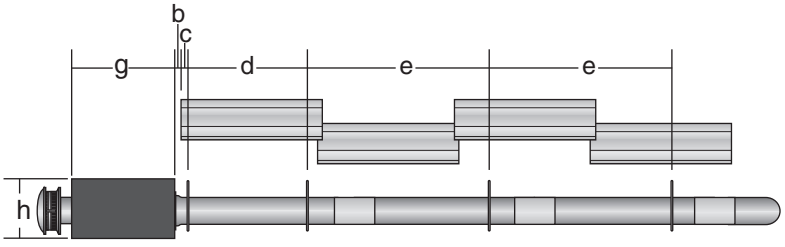

ET3-175 60' (18 m) Tube Length

7.2 Elbow Package Configuration

Step 7.2.1 Elbow Installation

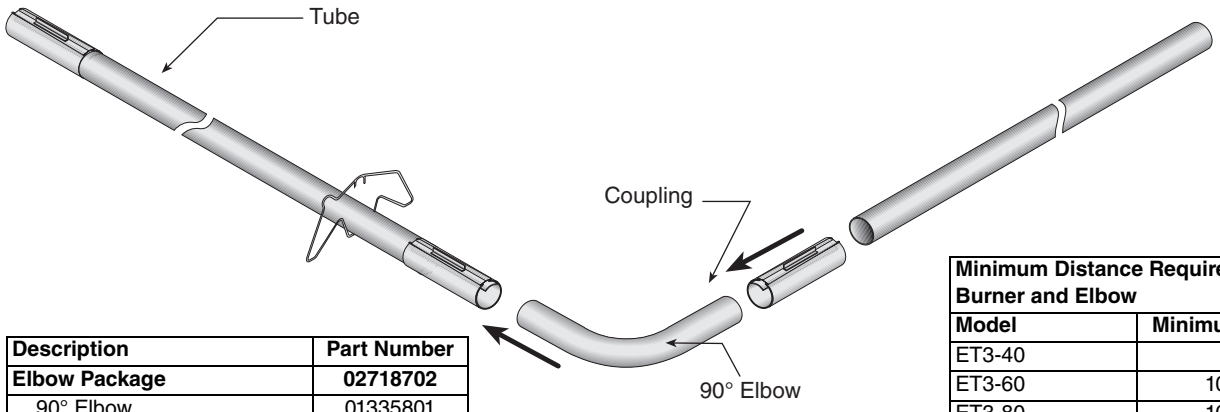

Description	Part Number
Elbow Package	**02718702**
90° Elbow	01335801
Coupling	01312700
Reflector End Cap	02750800
Reflector Joint Piece	02750900
U-Clip Package	**91107720**

Minimum Distance Required Between Burner and Elbow	
Model	**Minimum Distance**
ET3-40	-
ET3-60	10' (3 m)
ET3-80	10' (3 m)
ET3-100	15' (4.5 m)
ET3-125	15' (4.5 m)
ET3-150	15' (4.5 m)
ET3-175	15' (4.5 m)

Step 7.2.2 Elbow Installation

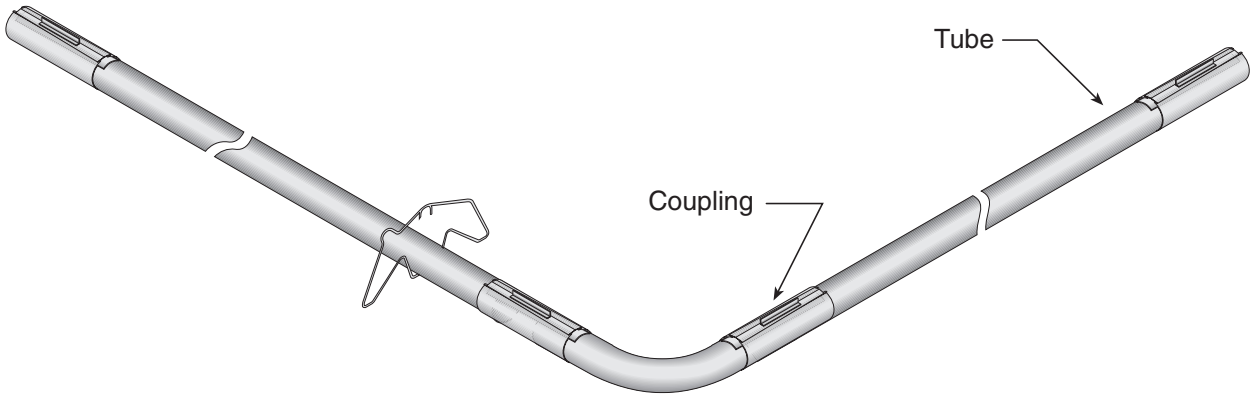

Step 7.2.3 Reflector Joint Installation

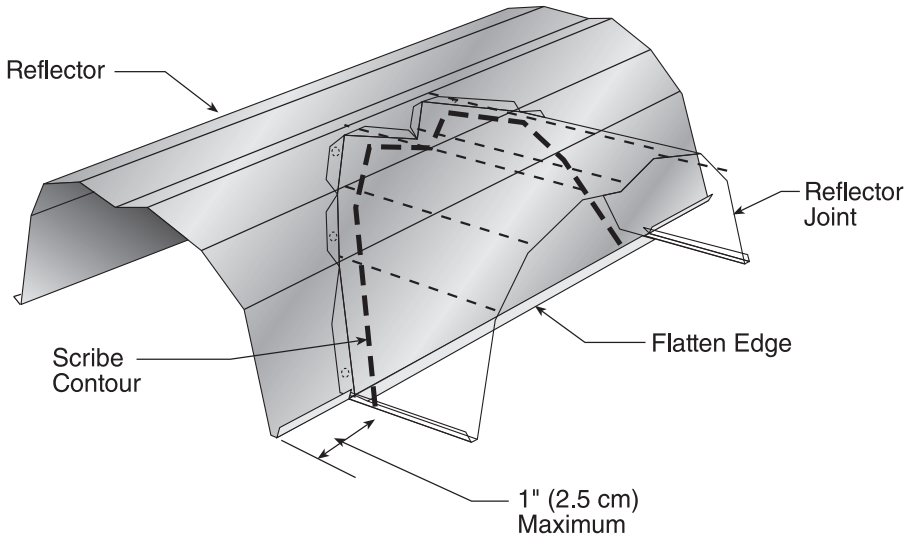

Step 7.2.4 Reflector Joint Installation

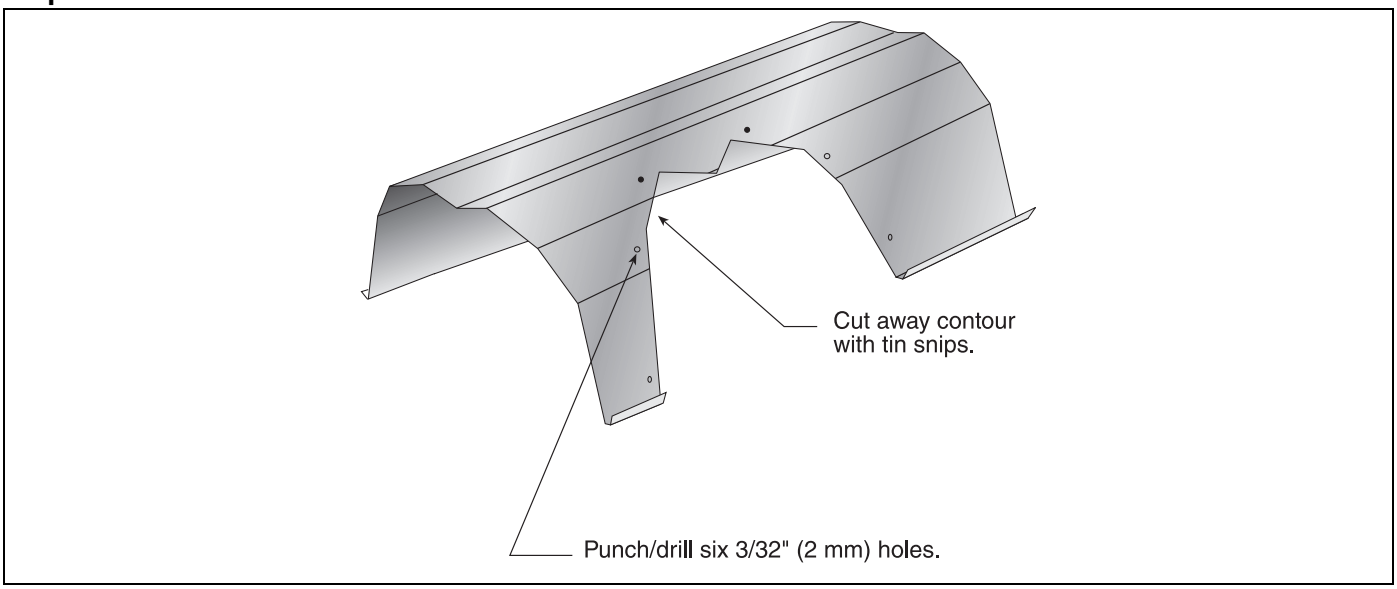

Step 7.2.5 Reflector Joint Detail

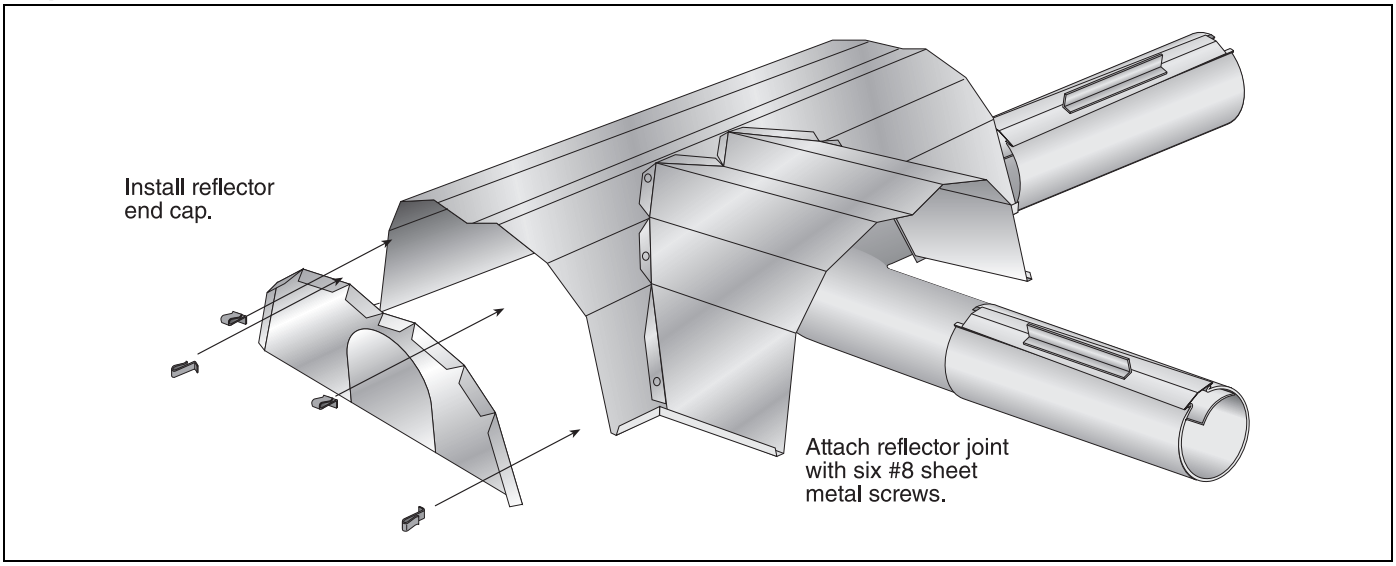

FIGURE 20: Reflector Joint Detail

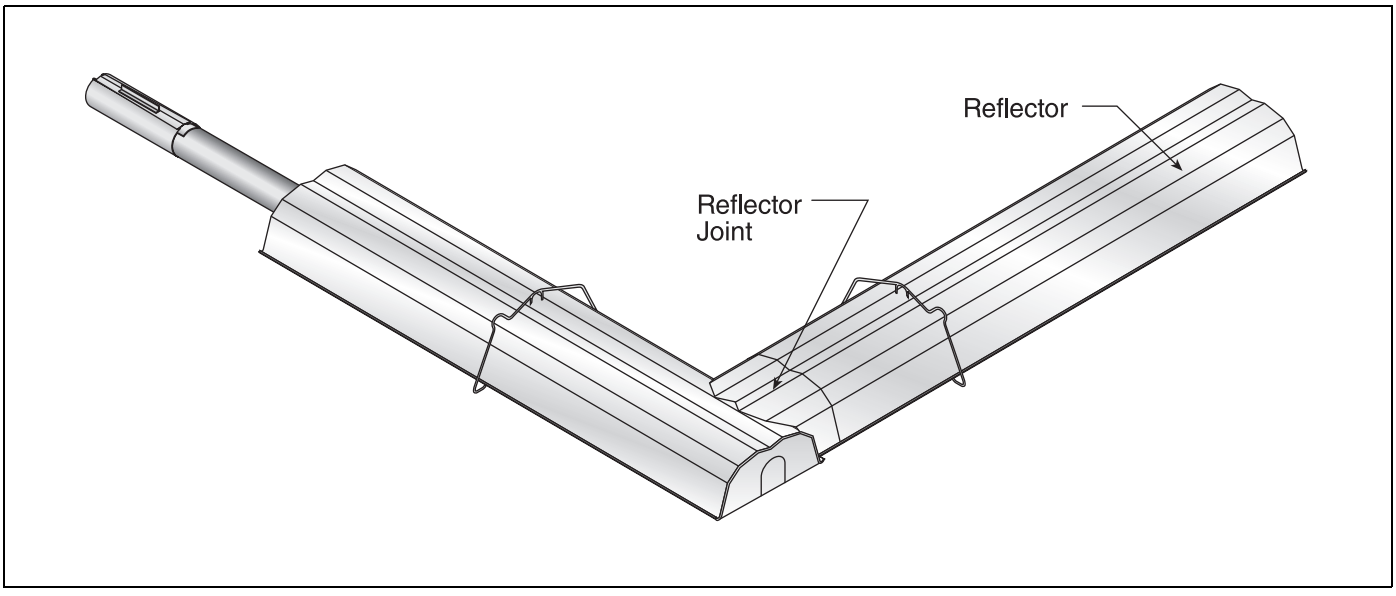

7.3 Reflector Side Extension (Not For Outdoor Use)

Step 7.3.1 Bracket Installation

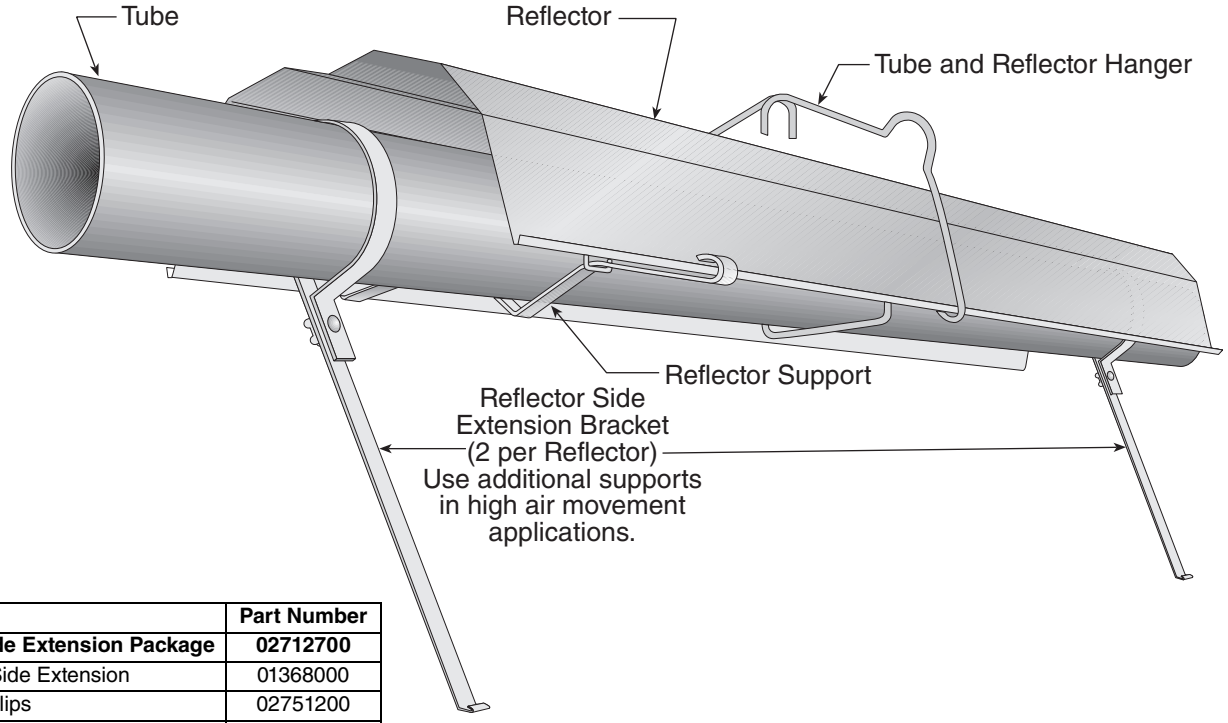

Description	Part Number
Reflector Side Extension Package	**02712700**
Reflector Side Extension	01368000
Retainer Clips	02751200
Sheet Metal Screws	94118106
Order Separately	
Reflector Side Extension	01329910

Step 7.3.2 Side Reflector Installation

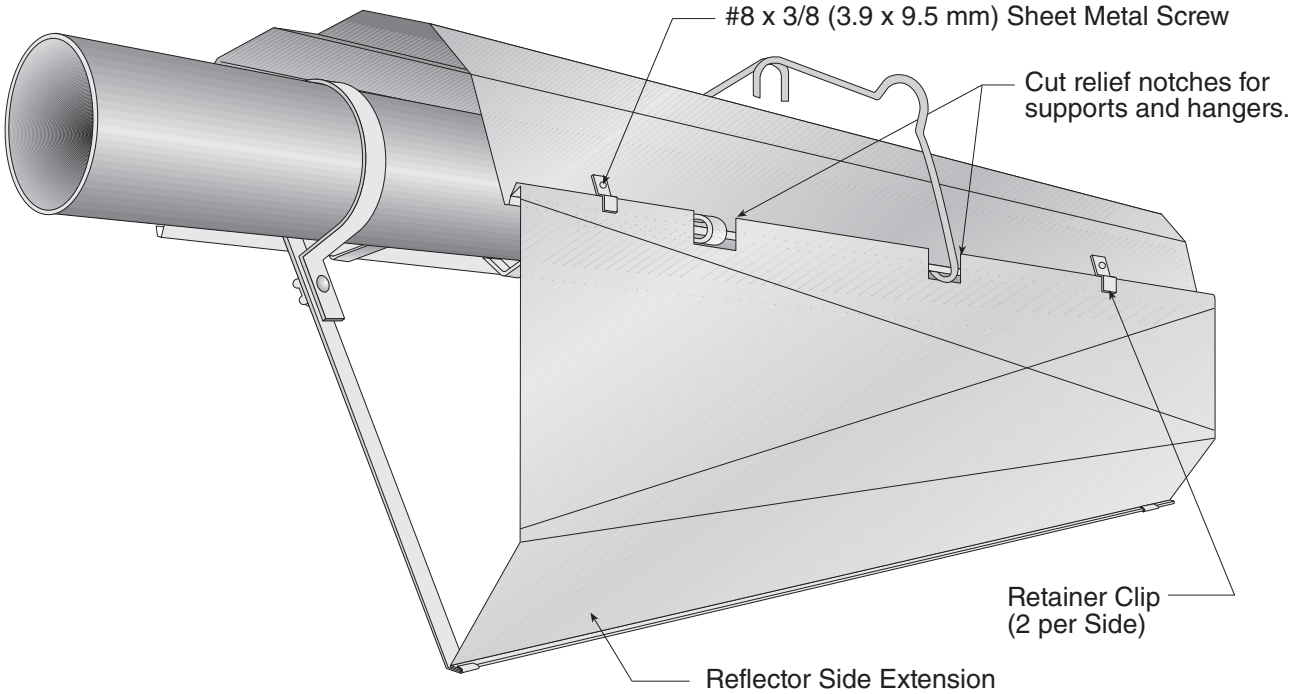

7.4 Lower Clearance Shield Installation (Not For Outdoor Use)

Step 7.4.1 Shield Support Strap Assembly

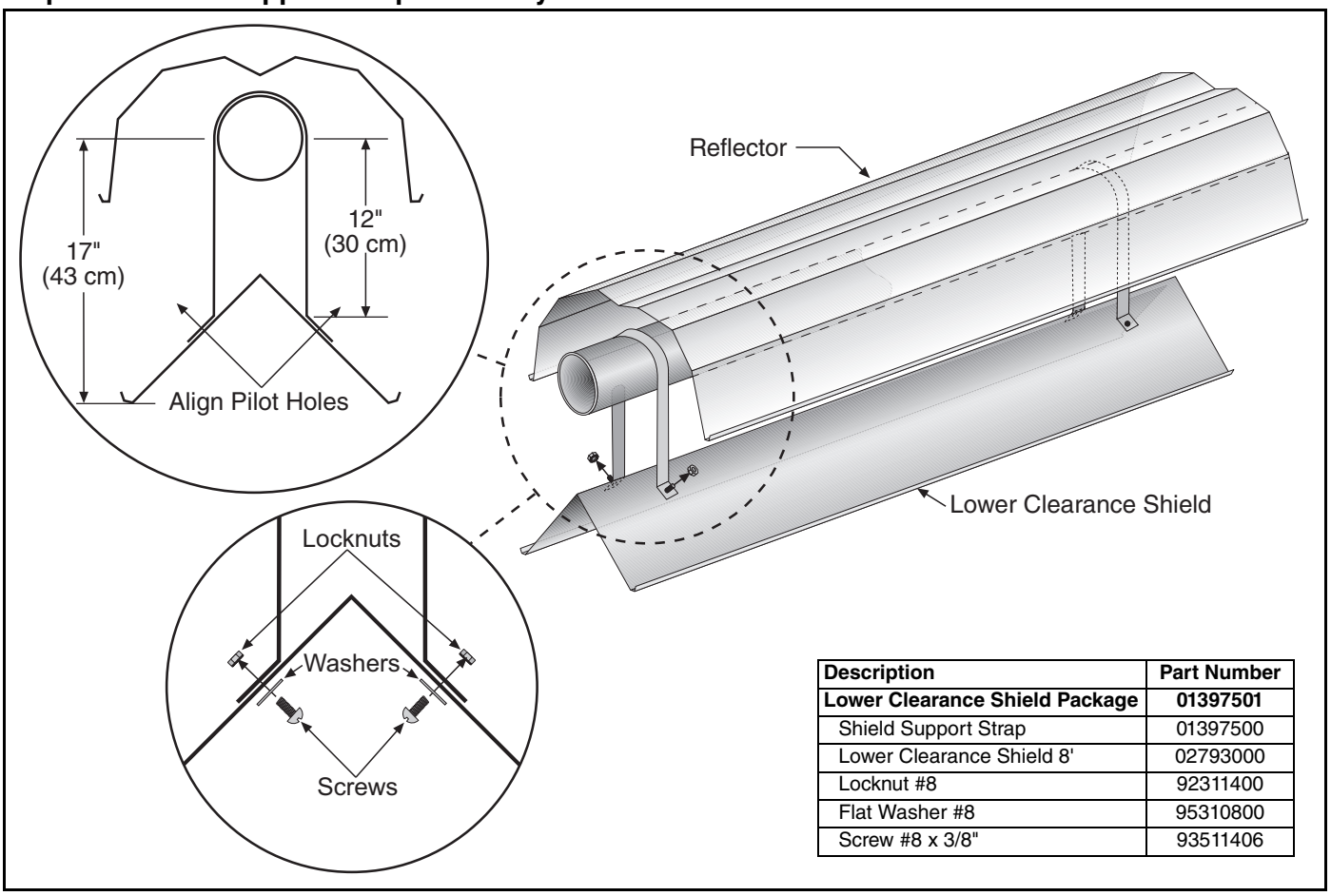

Description	Part Number
Lower Clearance Shield Package	**01397501**
Shield Support Strap	01397500
Lower Clearance Shield 8'	02793000
Locknut #8	92311400
Flat Washer #8	95310800
Screw #8 x 3/8"	93511406

7.5 Two-Foot Decorative Grille Installation (Not For Outdoor Use)

Step 7.5.1 Grille Installation

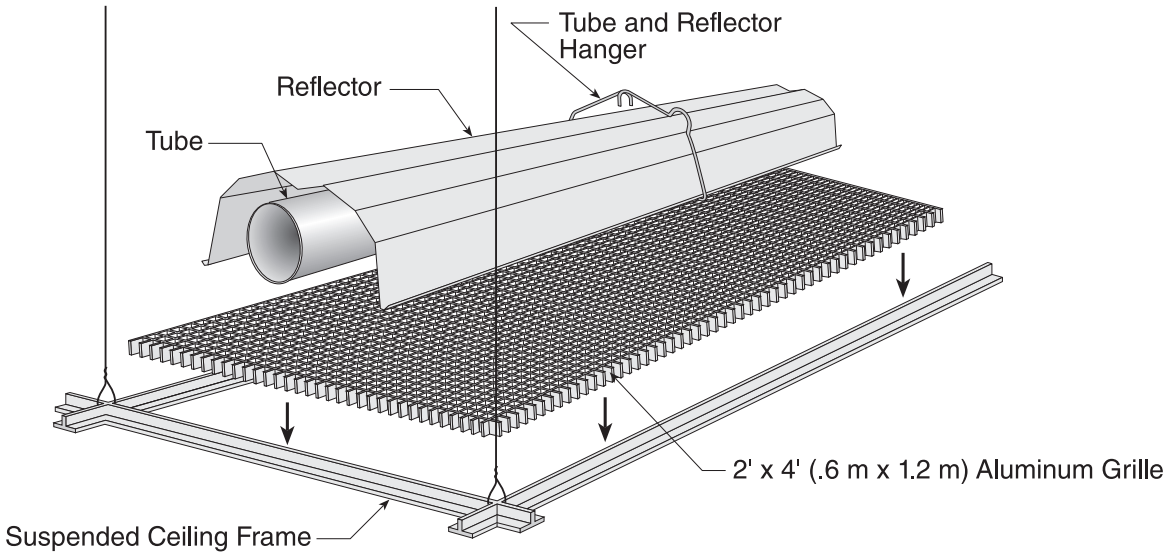

Description	Part Number
Aluminium Grille 2' x 4' (.6m x 1.2m)	91407000

Step 7.5.2 Frame Shield Installation

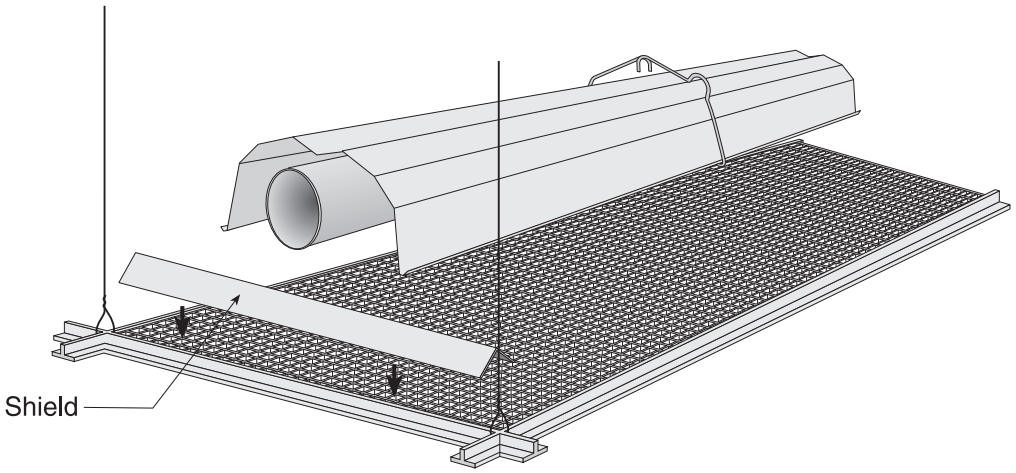

Description	Part Number
Deco Grille Shield	01365900

Step 7.5.3 Reflector Side Extension Installation for Decorative Grilles

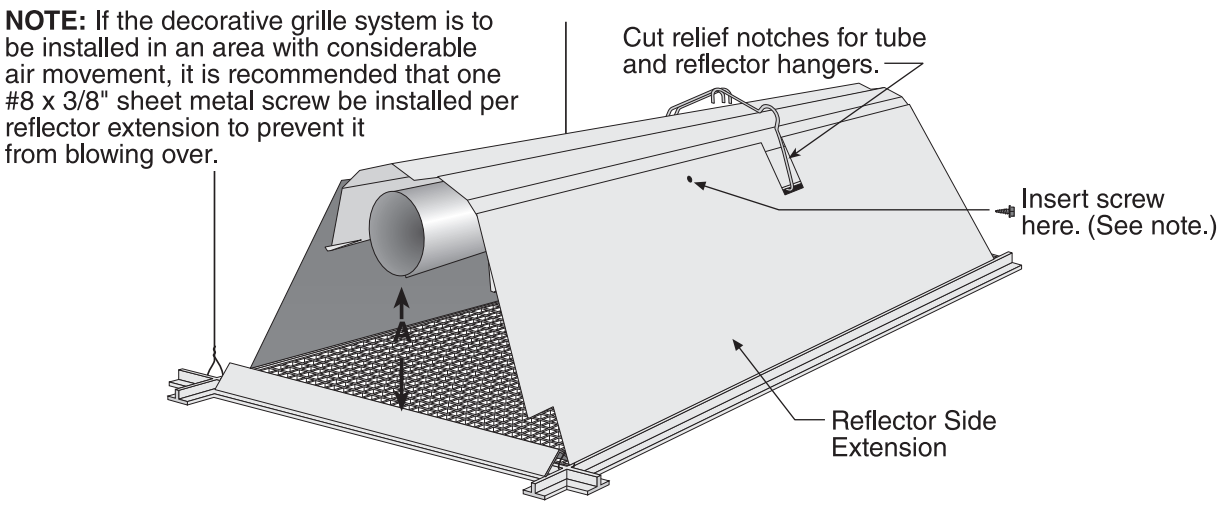

Distance "A"		Extension	
Minimum	Maximum	Part No.	Width
2" (4 cm)	6" (15 cm)	01370408	8" (20 cm)
6" (15 cm)	10" (26 cm)	01370412	12" (30 cm)
10" (26 cm)	14" (37 cm)	01370416	16" (40 cm)

Description	Part Number
Reflector Side Extension	01370412

7.6 Protective Grille Installation (Not For Outdoor Use)

Step 7.6.1 Silicone Cap Installation

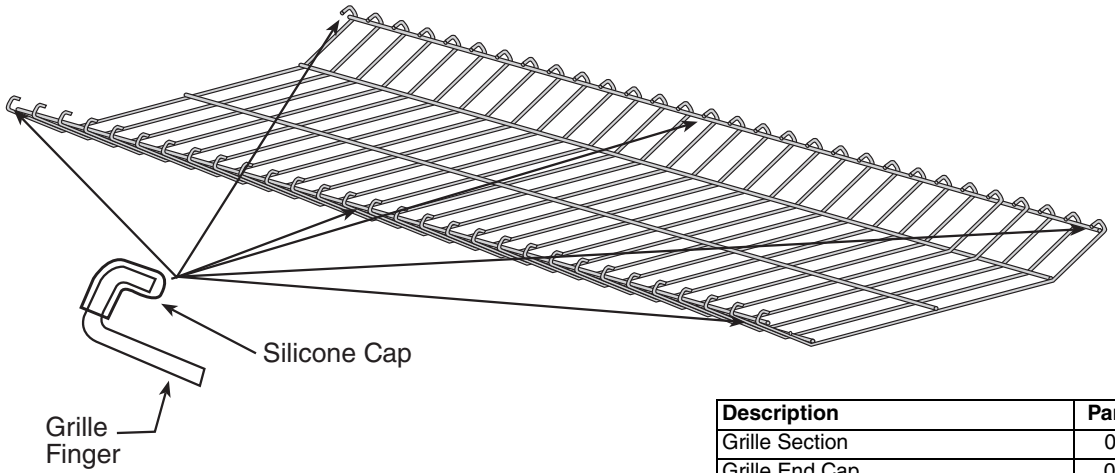

Description	Part Number
Grille Section	08050001
Grille End Cap	08050002
Silicone Cap	91915951-6P

Step 7.6.2 Grille End Cap Installation

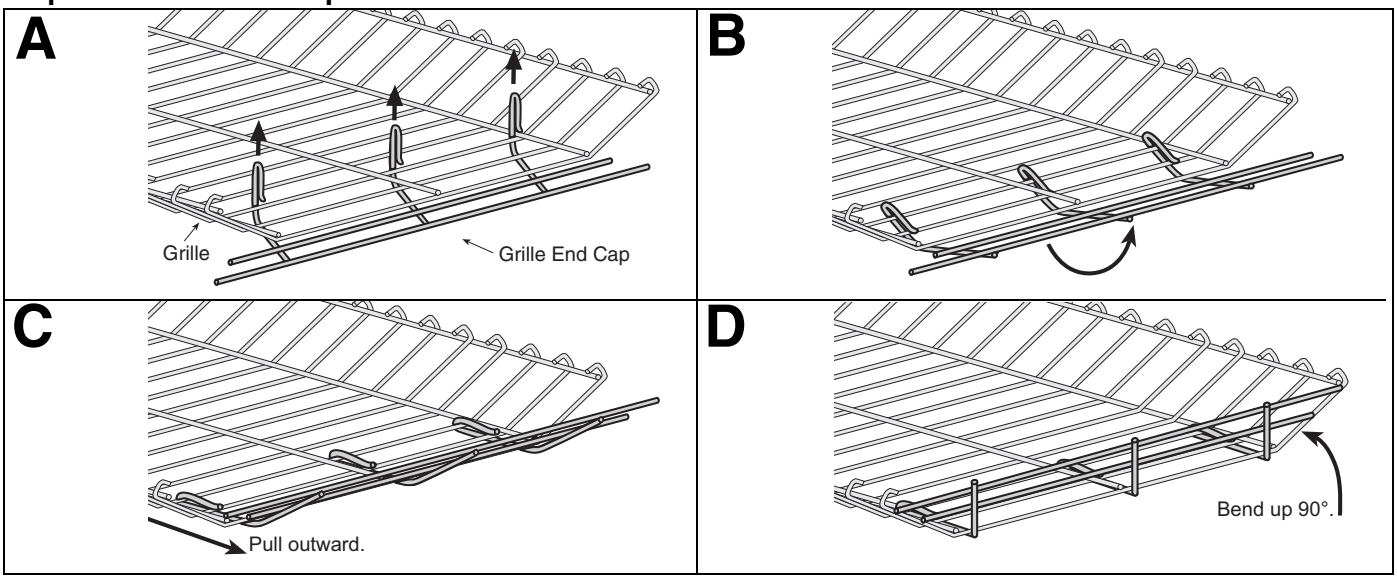

Step 7.6.3 Grille Installation

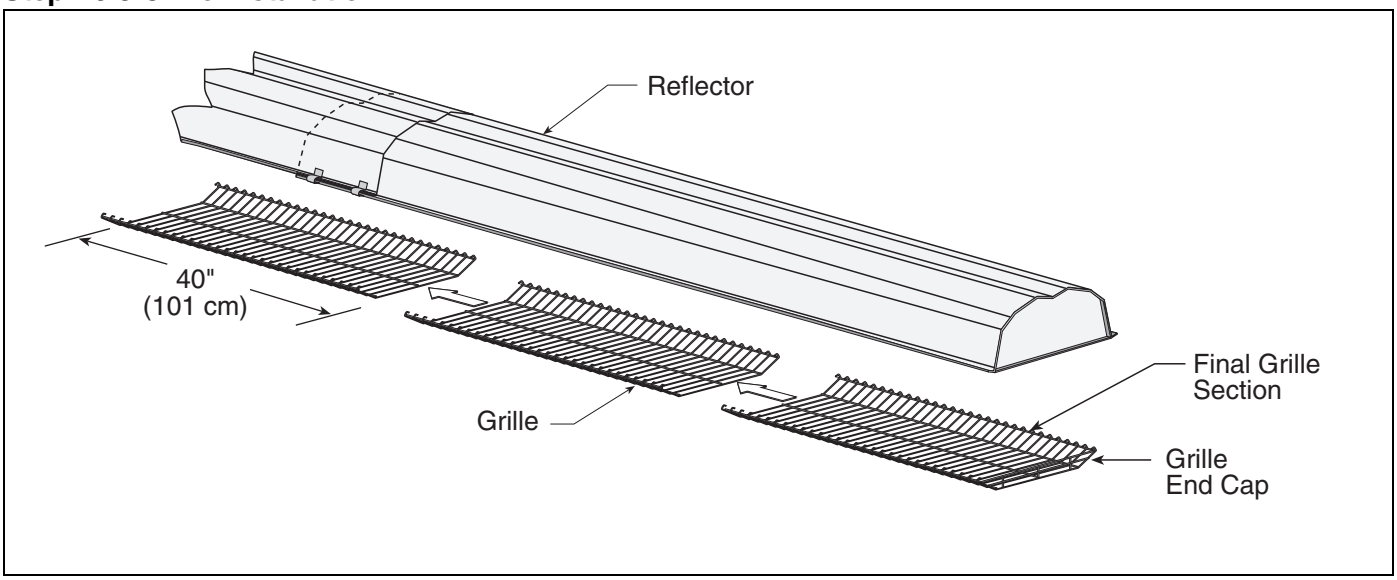

SECTION 8: VENTING

⚠WARNING

Carbon Monoxide Hazard

Heaters installed unvented must be interlocked with sufficient building exhaust.

Heaters must be installed according to the installation manual.

Failure to follow these instructions can result in death or injury.

⚠WARNING

Cut/Pinch Hazard

Wear protective gear during installation, operation and service.

Edges are sharp.

Failure to follow these instructions can result in injury.

8.1 General Venting Requirements

This heater must be vented in accordance with the rules contained in this manual and with the following national codes and any state, provincial or local codes which may apply:

United States: Refer to National Fuel Gas Code NFPA 54/ANSI Z223.1 - latest revision.

Canada: Refer to Natural Gas and Propane Installation Code CSA B149.1 - latest revision.

Exhaust end of heater will accept a 4" (10 cm) vent pipe using the vent adapter (P/N 90502700). To prevent leakage of condensation, install the vent adapter with the seam on top and seal the joint using a high temperature silicone sealant.

All vent joints should be sealed using suitable product such as General Electric RTV106 or Permatex Form-a-Gasket red high temperature silicone adhesive sealant.

FIGURE 21: Outdoor Vent Cap Installation

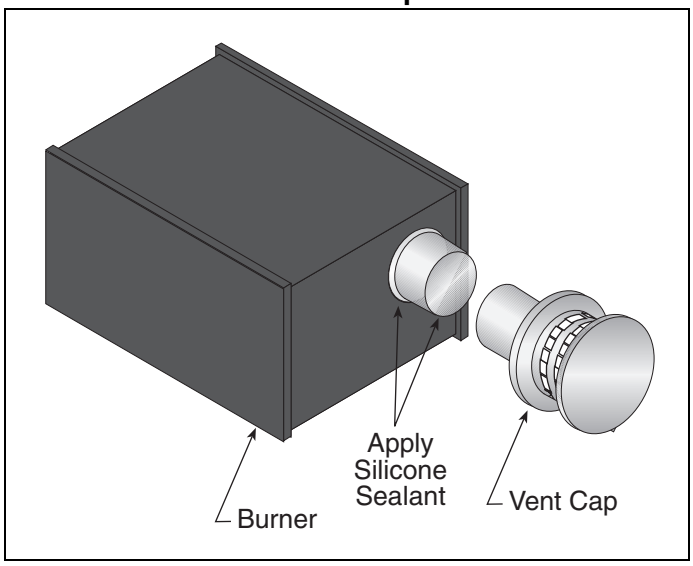

For outdoor installations, vent caps must be installed at inlet and flue end. (*See Page 38, Section 8.7*).

Any portion of vent pipe passing through a combustible wall must have an approved thimble to conform with the above listed codes.

Vent pipe must be sloped downward away from the burner 1/2" (1 cm) for every 20' (6 m).

The heater may be individually vented or common vented. When venting horizontally, a maximum of two heaters can be commonly vented. *See Page 40, Section 8.10*. When venting vertically, a maximum of four heaters can be commonly vented. *See Page 41, Section 8.11*.

The heater may also be installed unvented in certain circumstances according to building ventilation codes. Refer to the above codes *and Page 37, Section 8.2* for further information. Unvented operation also requires compliance with the clearances to combustibles given *on Page 10, Figure 12*.

The bottom of the vent or air intake terminal shall not be located less than 1' (.3 m) above grade level.

The vent shall not terminate less than 7' (2.1 m) above grade where located adjacent to public walkways.

Vent terminal must be installed at a height sufficient to prevent blockage by snow, and building materials protected from degradation by flue gases.

Secure all joints with #8 x 3/8 sheet metal screws. Seal all joints with high temperature silicone sealant.

Vent terminal must be beyond any combustible overhang.

8.1.1 United States Requirements

Vent must terminate at least 3' (.9 m) above any forced air inlet located within 10' (3.1 m).

Vent must terminate at least 4' (1.2 m) below, 4' (1.2 m) horizontally from, or 1' (.3 m) above any door, operable window, or gravity air inlet into any building.

8.1.2 Canadian Requirements

The vent shall not terminate within 6' (1.8 m) of a mechanical air supply inlet to any building.

The vent shall not terminate within 3' (.9 m) of a window or door that can be opened in any building, any non-mechanical air supply inlet to any building, or of the combustion air inlet of any other appliance.

8.2 Unvented Operation

Sufficient ventilation must be provided in the amount of 4 cfm per 1000 Btu/h firing rate (United States); 3 cfm per 1000 Btu/h firing rate (Canada).

Use of optional outside combustion air is not recommended with unvented heaters.

If exhaust fans are used to supply ventilation air, an interlock switch must be used to prevent the heater from coming on when the fans are off. This may be done using a pressure switch.

8.3 Horizontal Venting

In noncombustible walls only, vent terminal (P/N 02537801-1P) may be used.

For 4" (10 cm) vents in either combustible or noncombustible walls, use Tjernlund VH1-4 (P/N 90502100) or equivalent, insulated vent terminal. Follow the manufacturer's instructions for proper installation.

For 6" (15 cm) common vents in either combustible or noncombustible walls, use Tjernlund VH1-6 (P/N 90502101) or equivalent, insulated vent terminal. Follow the manufacturer's instructions for proper installation.

8.4 Vertical Venting

For 4" (10 cm), an approved vent cap (P/N 90502300) must be used.
For 6" (15 cm) common vent, an approved vent cap (P/N 90502302) must be used.
For common vertical venting of more than two heaters, *See Page 41, Section 8.11*.
A vent shall not extend less than 2' (.6m) above the highest point where it passes through a flat roof of a building.

8.5 Unvented Operation Tube Termination

Turndown type vent terminal with a screen must be installed at the exhaust end of the tube. Vent terminal design shall not incorporate backdraft flap.

FIGURE 22: Tube Termination

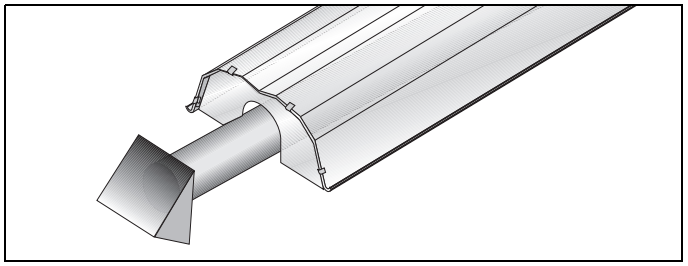

8.6 Length Requirements

The maximum vent length allowed is 45' (13.7 m). The maximum outside air supply duct length allowed is 45' (13.7 m).

The total vent length, plus outside air duct length, plus any extensions to minimum heat exchanger lengths, cannot exceed 65' (19.8 m).

Vent length should be limited to less than 20' (6 m). If using vent lengths greater than 20' (6 m), condensation will form in the vent pipe. Insulation and additional sealing measures (high temperature silicone at all seams) are required. Optional heat exchanger beyond minimum lengths is considered as vent length for length determination.

Subtract 15' (4.6 m) of maximum allowed vent or duct length per vent elbow if more than two are used.

8.7 Venting Options

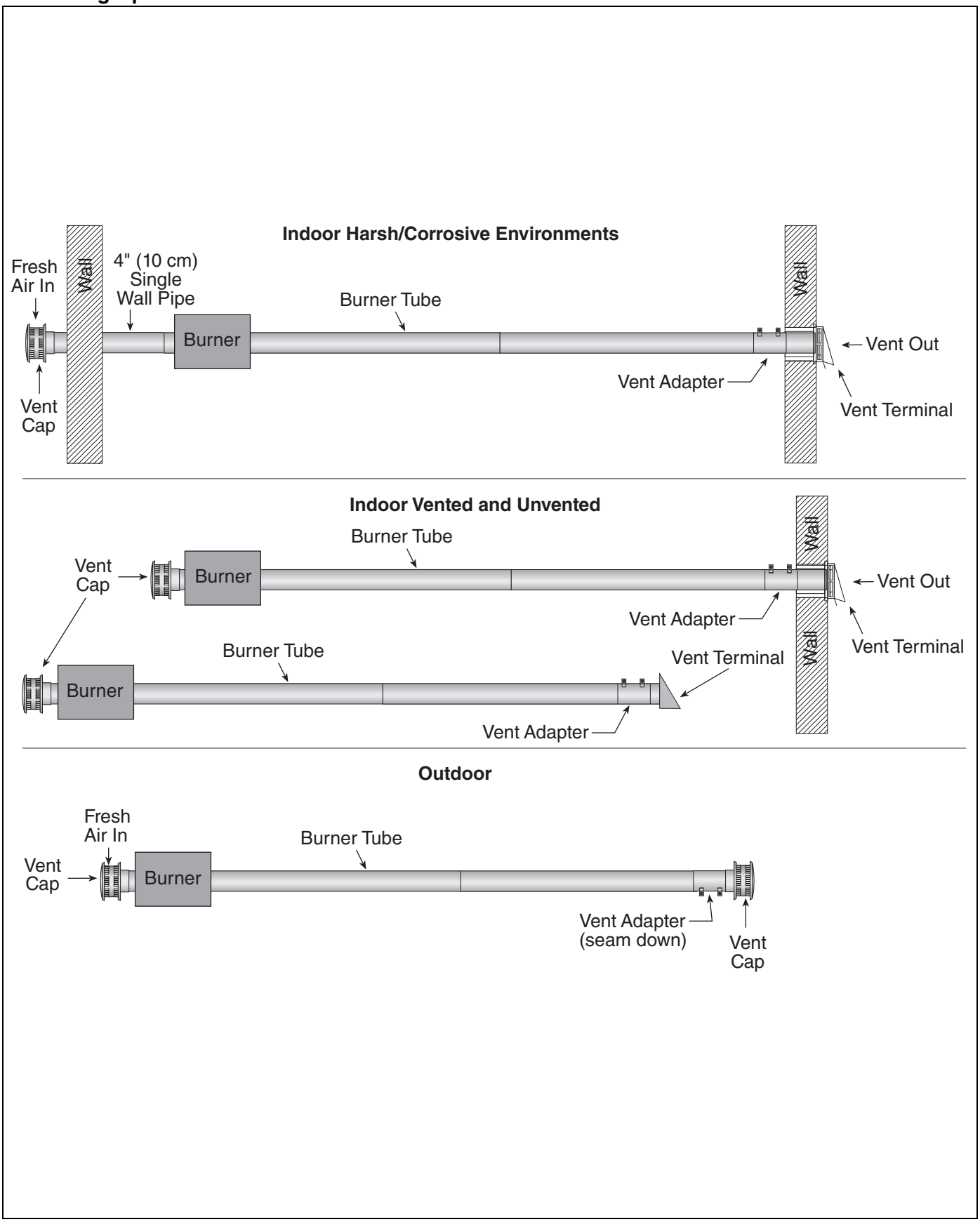

8.8 Horizontal Ventilation 4" (10 cm) Pipe

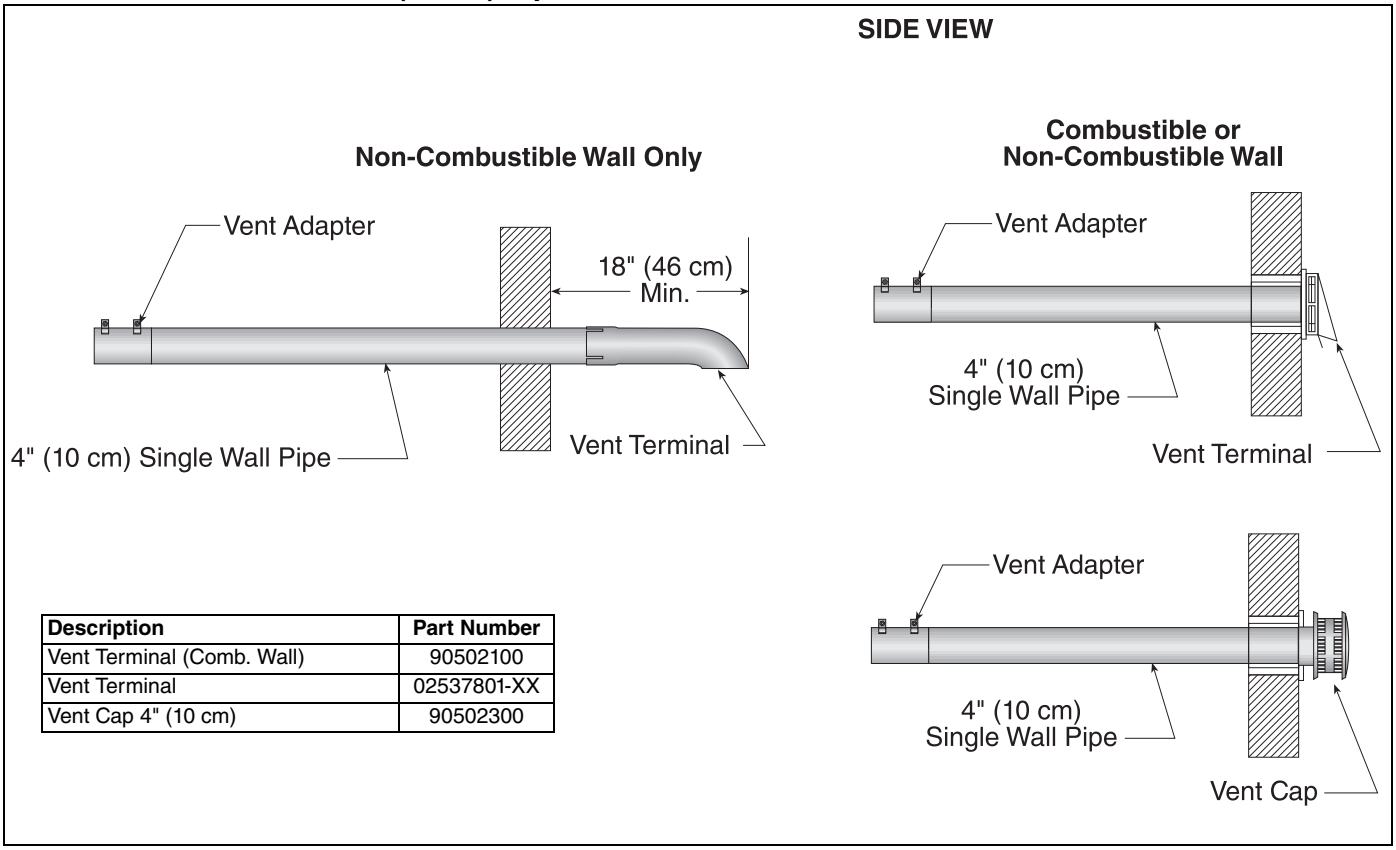

Description	Part Number
Vent Terminal (Comb. Wall)	90502100
Vent Terminal	02537801-XX
Vent Cap 4" (10 cm)	90502300

8.9 Vertical Ventilation 4" (10 cm) Pipe

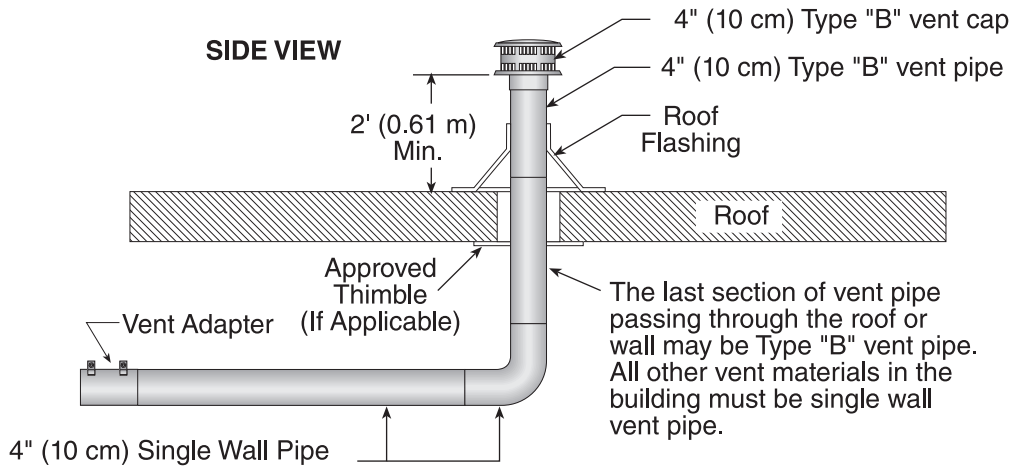

Description	Part Number
Vent Cap 4" (10 cm)	90502300

8.10 Common Sidewall Venting

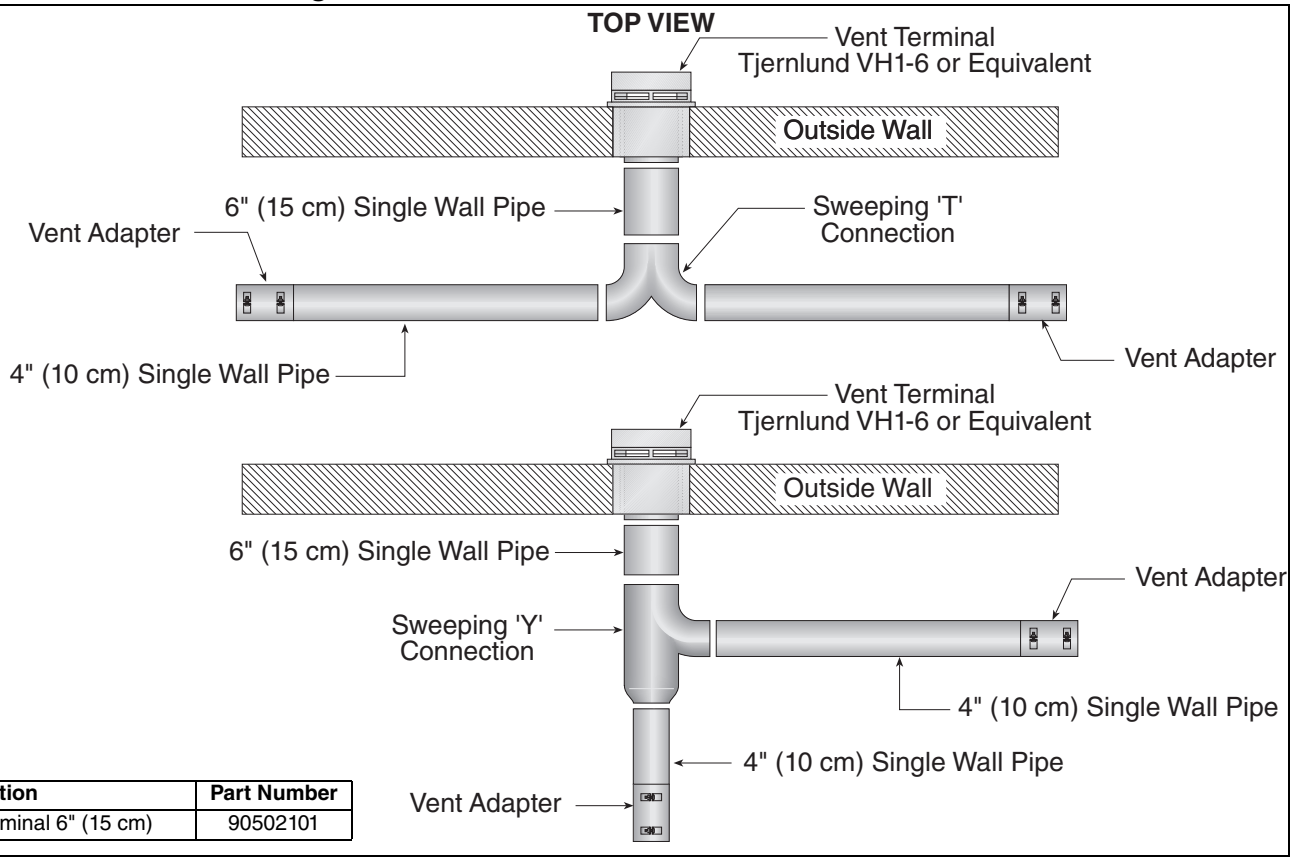

Description	Part Number
Vent Terminal 6" (15 cm)	90502101

Requirements:

- Maximum of two heaters can be commonly vented through a side wall.
- Heaters must be of the same BTU output.
- Heaters must be controlled by a common thermostat.

8.11 Common Vertical Venting

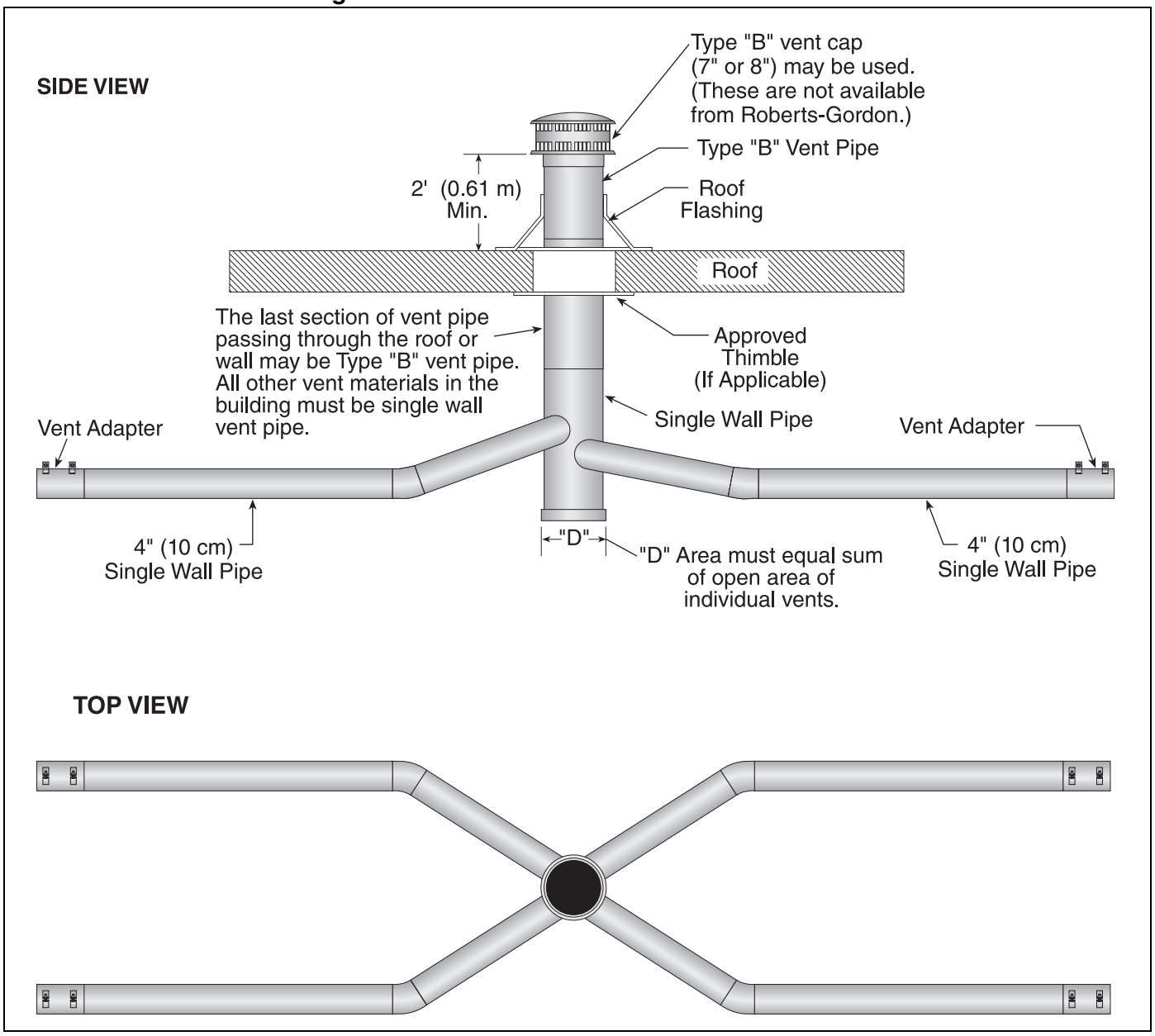

Requirements:

- Maximum of four heaters can be commonly vented through the roof.
- Heaters must be of the same BTU output.
- Heaters must be controlled by a common thermostat.
- Connections to a common stack must be positioned to avoid direct opposition between streams of combustion gases.

8.12 Outside Combustion Air Supply

IMPORTANT: If the building has a slight negative pressure or corrosive contaminants, such as halogenated hydrocarbons, are present in the air, an outside combustion air supply to the heater is required. Seal all combustion air pipe joints.

Use of optional outside combustion air is not recommended with unvented heaters.

The air supply duct may have to be insulated to prevent condensation on the outer surface. The outside air terminal must not be more than 1' (31 cm) above the vent terminal.

8.12.1 Length Requirements

Follow the constraints listed *on Page 37, Section 8.6*.

8.12.2 Vertical Outside Air Supply for Single Heater Installation

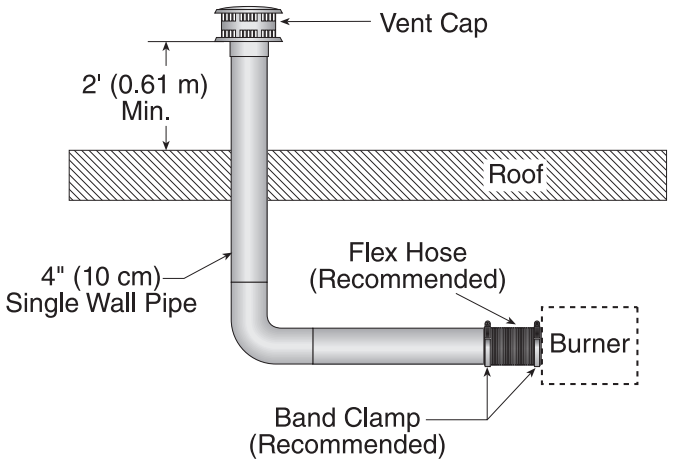

Description	Part Number
Vent Cap 4" (10 cm)	90502300

8.12.3 Horizontal Outside Air Supply for Single Heater Installation

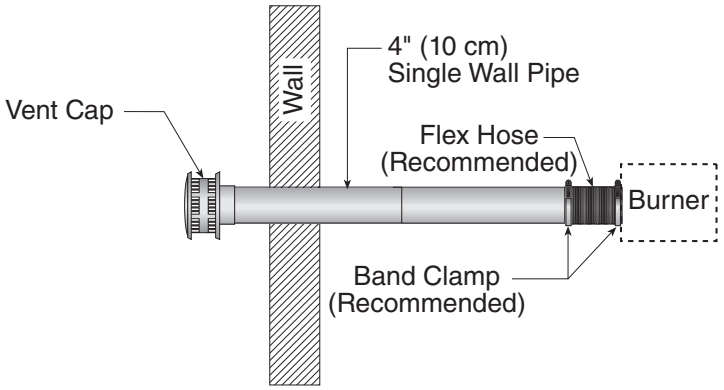

Description	Part Number
Vent Cap 4" (10 cm)	90502300

8.12.4 Vertical Outside Air Supply for Double Heater Installation

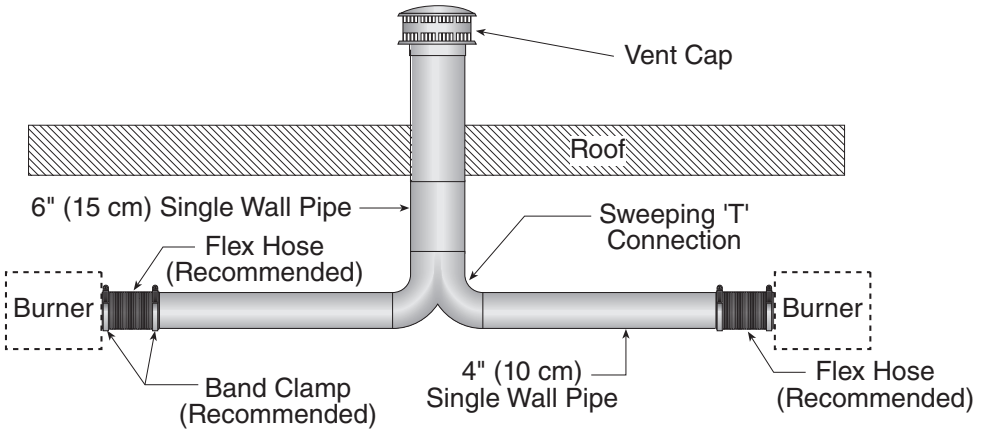

Requirements:

- Heaters must be controlled by a common thermostat.

8.12.5 Horizontal Outside Air Supply for Double Heater Installation

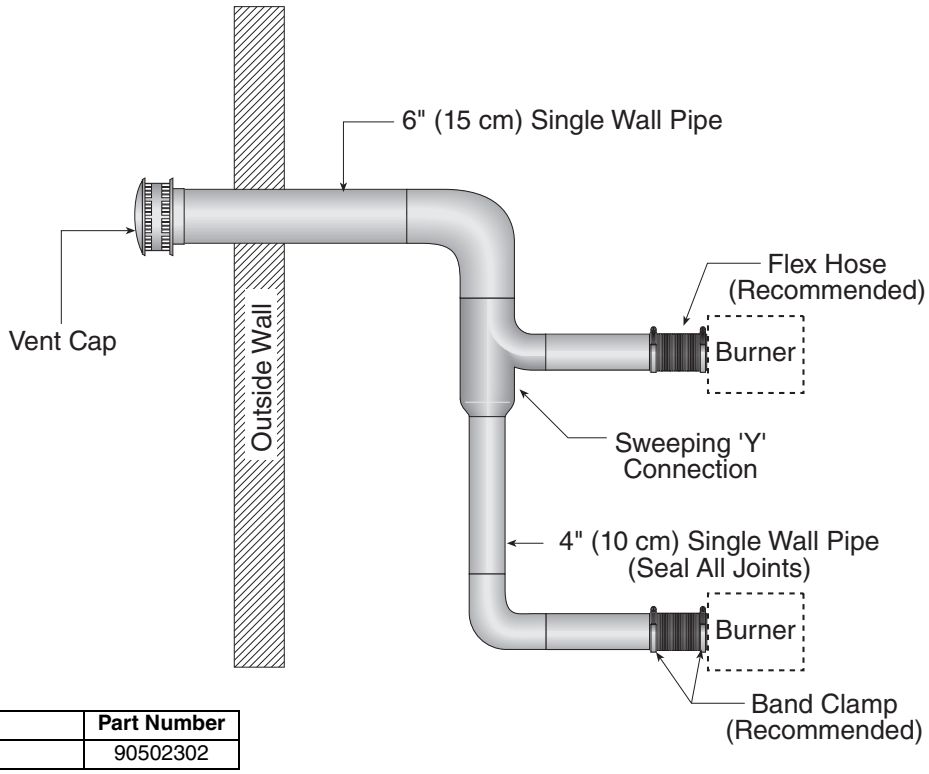

Description	Part Number
Vent Cap 6" (15 cm)	90502302

Requirements:

- Heaters must be controlled by a common thermostat.

SECTION 9: GAS PIPING

⚠ WARNING

Fire Hazard

Tighten gas hose fittings to connect gas supply according to Figure 23.

Gas hose can crack when twisted.

Gas hose moves during normal operation.

Use only 36" (91 cm) long connector of 1/2" or 3/4" nominal ID.

Connector supplied with heater for U.S. models (not with Canadian models).

Failure to follow these instructions can result in death, injury or property damage.

⚠ WARNING

Explosion Hazard

Leak test all components of gas piping before operation.

Gas can leak if piping is not installed properly.

Do not high pressure test gas piping with heater connected.

Failure to follow these instructions can result in death, injury or property damage.

Install the gas hose as shown in *Figure 23*. The gas hose accommodates expansion of the heating system and allows for easy installation and service of the burner. Before connecting the burners to the supply system, verify that all high pressure testing of the gas piping has been completed.

There is an expansion of the tube with each firing cycle, this will cause the burner to move with respect to the gas line. This can cause a gas leak resulting in an unsafe condition if the gas connection is not made strictly in accordance with *Figure 23*.

Meter and service must be large enough to handle all the burners being installed plus any other connected load. The gas line which feeds the system must be large enough to supply the required gas with a maximum pressure drop of 1/2" wc. When gas piping is not included in the layout drawing, the local gas supplier will usually help in planning the gas piping.

Gas lines must meet applicable codes:
United States: The Flexible Stainless Steel Gas Hose (US models) supplied with the heater is certified per the Standard for Connectors for Gas Appliances, ANSI Z21.24/CSA 6.10 - latest revision.
Canada: The Rubber Type 1 Gas Hose (Canadian models) optional with the heater is certified as being in compliance with the Standard for Elastomeric Composite Hose and Hose Couplings for Conducting Propane and Natural Gas, CAN/CGA 8.1 - Latest revision.

- **Check the pipe and tubing ends for leaks before placing heating equipment into service. When checking for gas leaks, use a soap and water solution; never use an open flame.**

FIGURE 23: Gas Connection with Flexible Gas Hose

CORRECT POSITIONS

⚠ CAUTION

Product Damage Hazard

Hold gas nipple securely with pipe wrench when attaching gas hose.

Failure to follow these instructions can result in product damage.

Shut-Off Valve (included with gas hose) must be parallel to burner gas inlet. The 3" (8 cm) displacement shown is for the cold condition. This displacement may reduce when the system is fired.

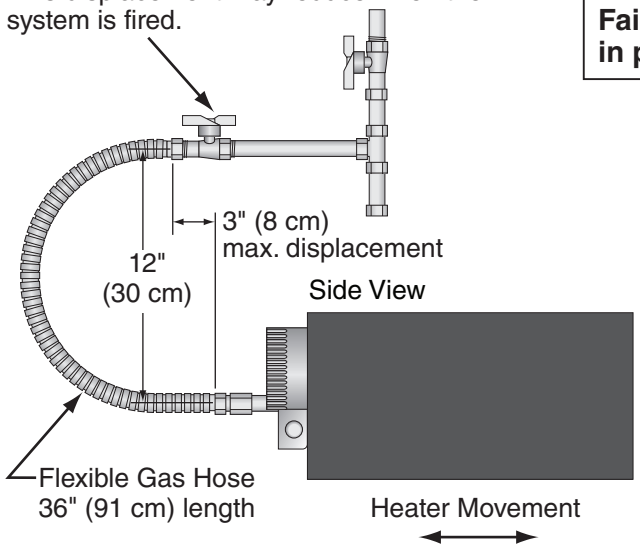

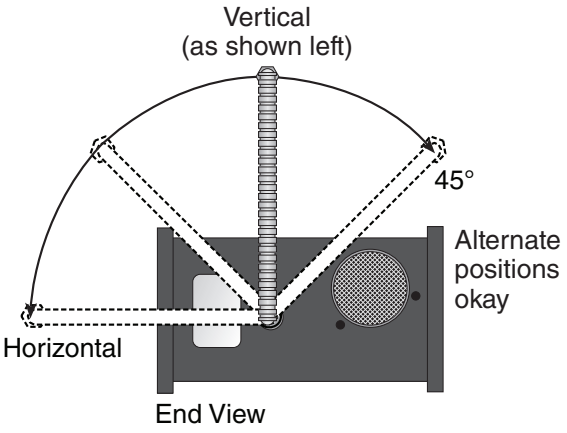

INCORRECT POSITIONS (WRONG INSTALLATION)

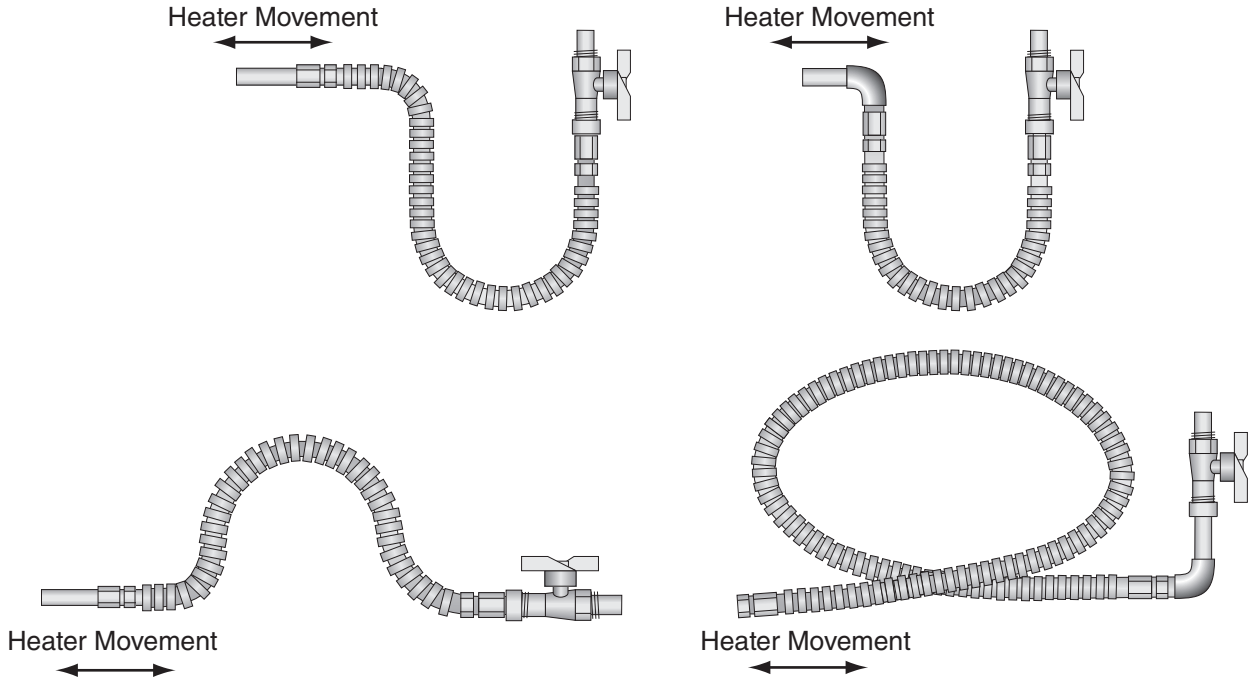

Description	Part Number
3/4" Flexible Stainless Steel Gas Hose (US Models)	91412204
3/4" Rubber Type 1 Gas Hose (Canadian Models)	91412207

SECTION 10: WIRING

⚠ DANGER

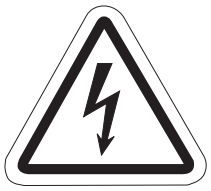

Electrical Shock Hazard

Disconnect electric before service.

Heater must be properly grounded.

Failure to follow these instructions can result in death or electrical shock.

Heaters can be controlled using several methods. Normally thermostats are used to control the heaters but they can also be controlled by an Energy Management System. *Section 10.1* below illustrates the connection for heaters controlled by a line voltage thermostat. NOTE: In order to use line voltage thermostats, the low voltage terminal located at the back of each burner must be connected as shown in the detail. For a single heater on a low voltage thermostat, *See Section 10.2* below. To control multiple heaters on one low voltage thermostat, *See Page 47, Section 10.3*. NOTE: In order to control multiple heaters on one low voltage thermostat, the low voltage terminals on each heater must be connected as shown in detail. Heaters must be grounded in accordance with applicable codes: United States: refer to National Electrical Code® ANSI/NFPA 70 - latest revision Canada: refer to Canadian Electrical Code CSA C22.1 Part I - latest revision.

If any of the original internal wiring must be replaced, it must be replaced with wiring materials having a temperature rating of at least 105° C and 600 V.

10.1 Line Voltage Thermostat Wiring

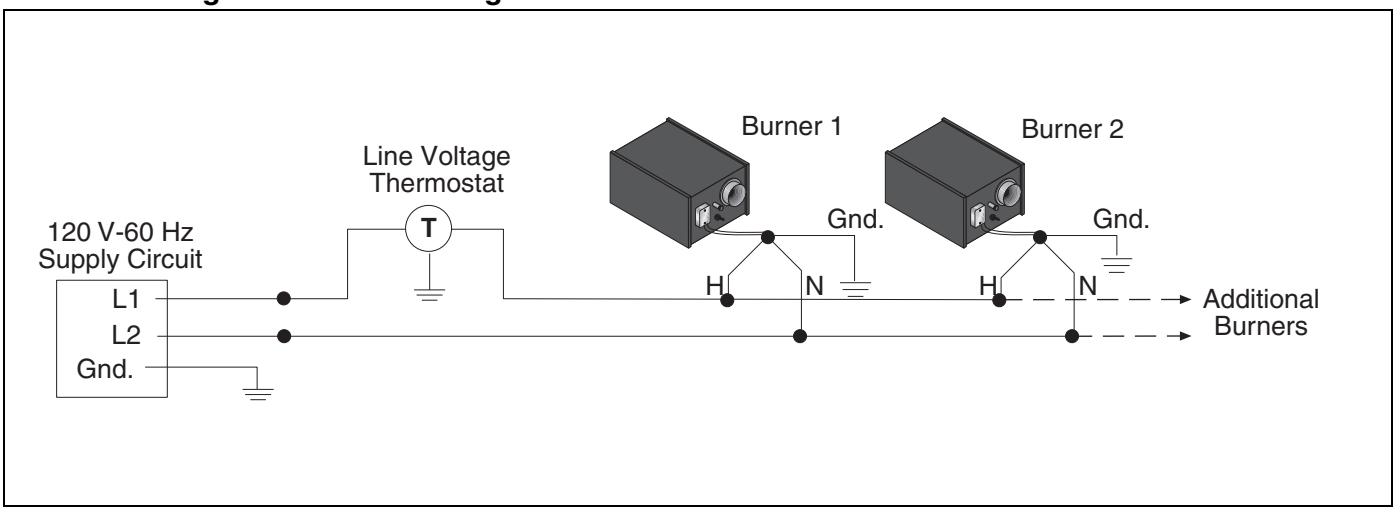

10.2 Low Voltage Thermostat with One Burner

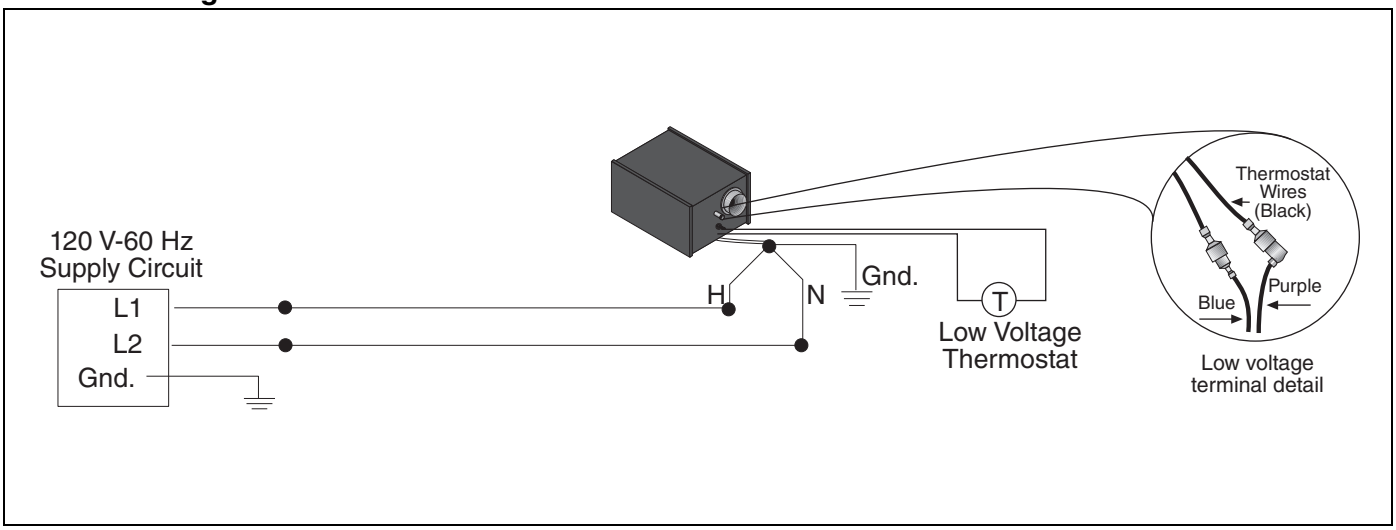

10.3 Low Voltage Thermostat Wiring with Multiple Burners

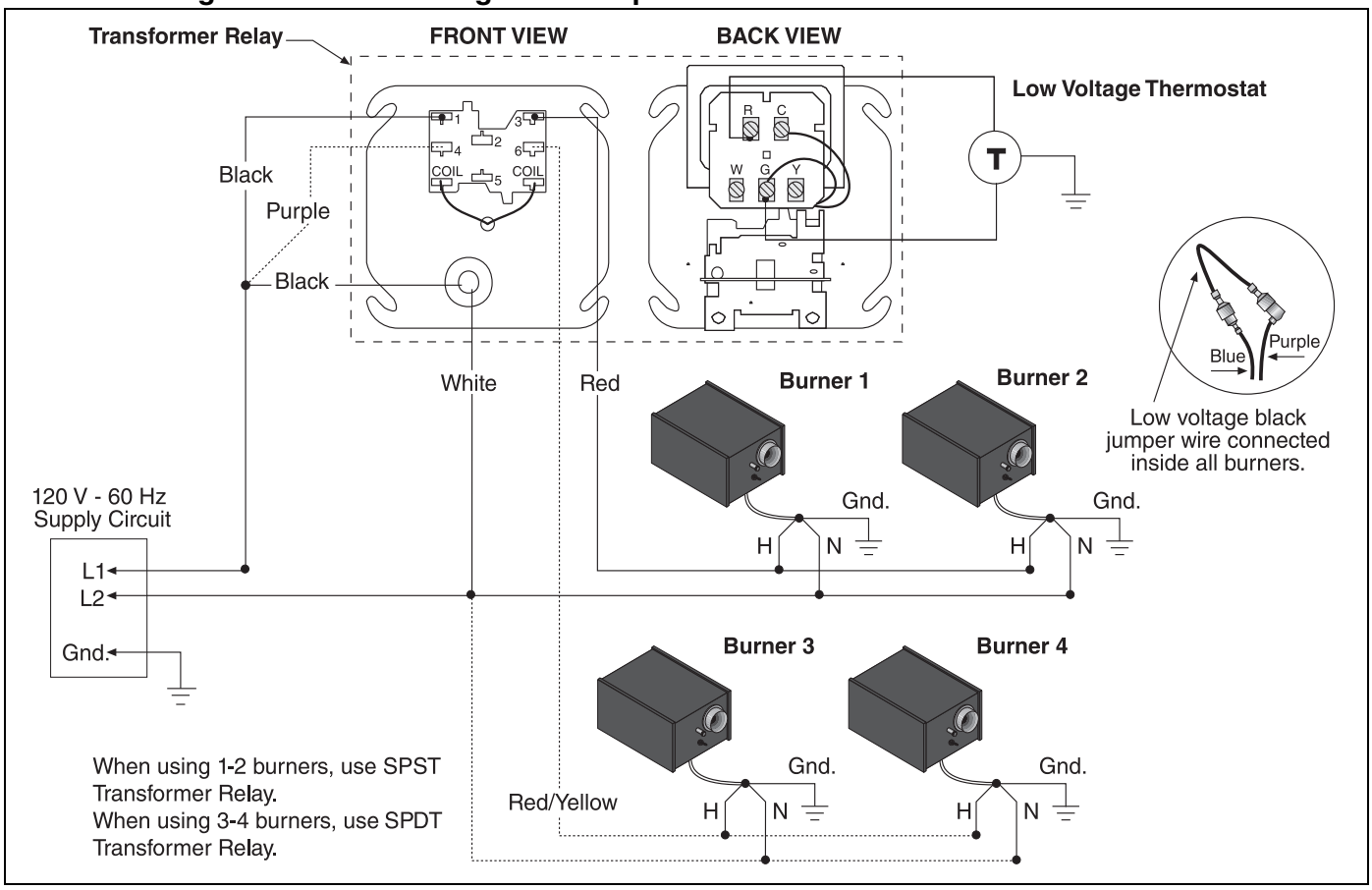

10.4 Electrical Connection to the Burner Box using Line Voltage Thermostat on Control

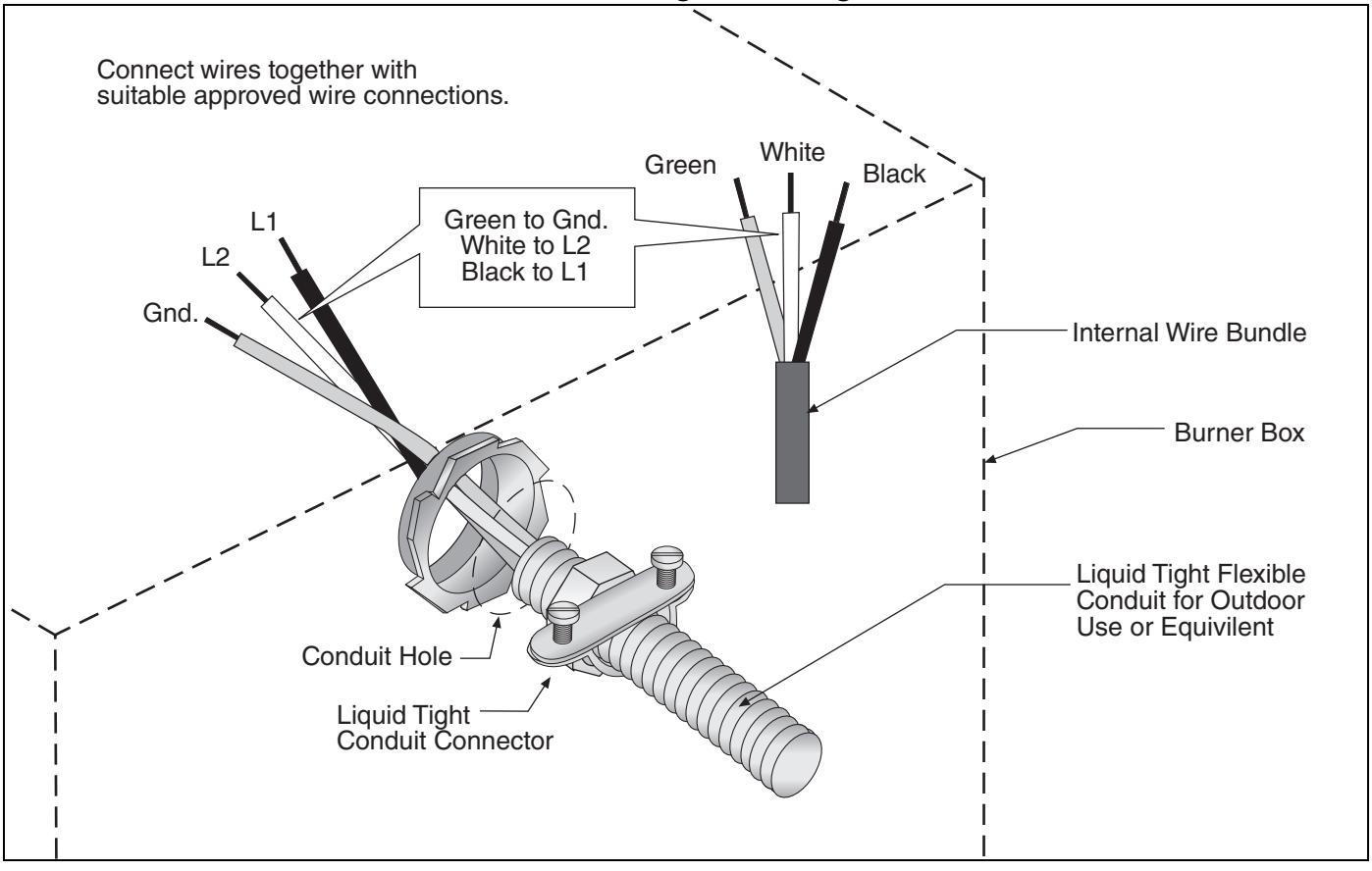

10.5 For External Thermostat Connection

Run two wires from low voltage thermostat through conduit as shown. The purple wire from the valve and the blue wire from the transformer have 1/4" (6 mm) blade female electrical terminals, which are connected by a black jumper wire. Cut the female connections off the ends of the blue and purple wires and strip the ends approximately 1/2" (1.3 cm). Connect these 2 wires to the thermostat wires using suitable wire connectors.

10.6 Electrical Connection to Burner Box with Optional External Low Voltage Thermostat

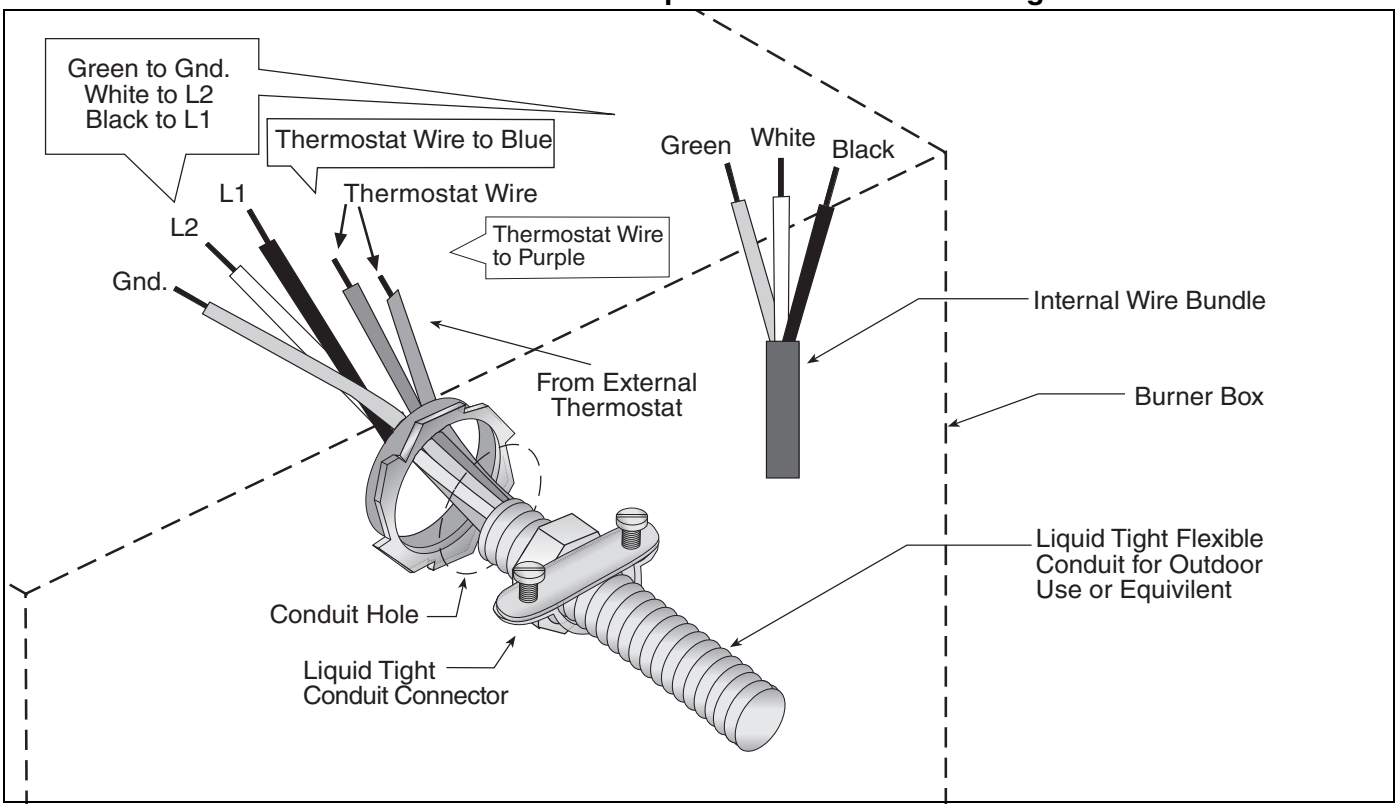

10.7 Internal Wiring

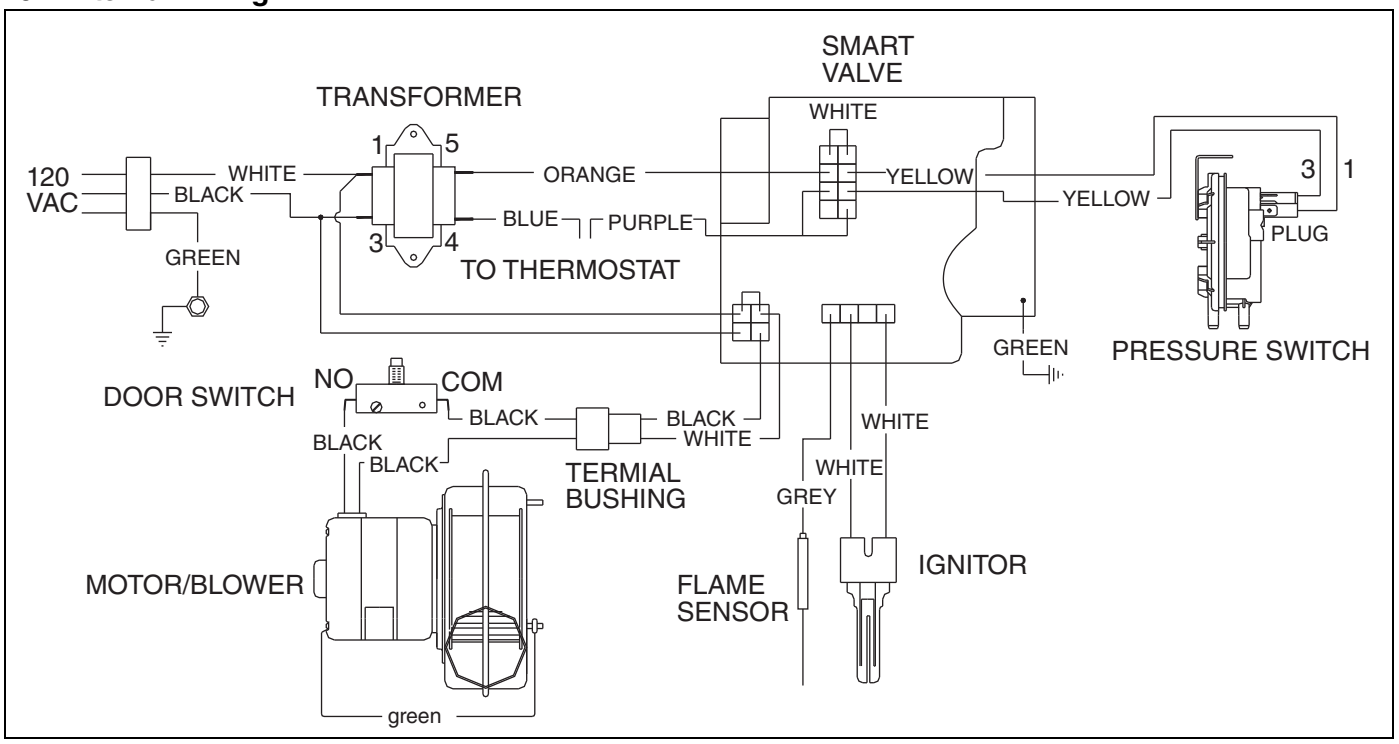

10.8 Ladder Diagram

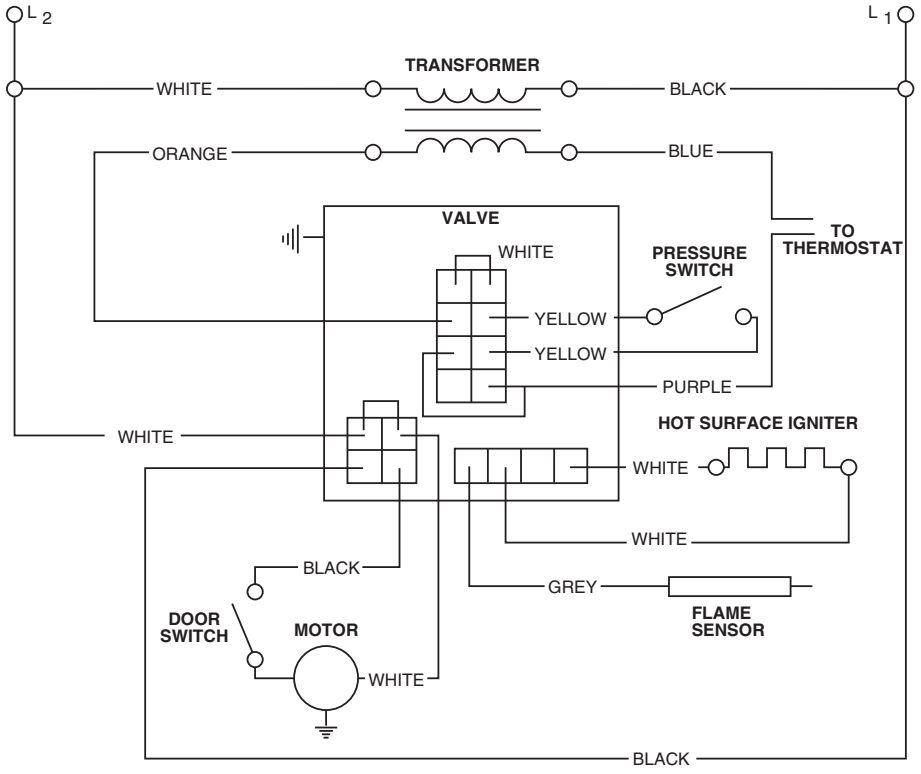

SECTION 11: OPERATION AND MAINTENANCE

⚠ DANGER	⚠ WARNING		
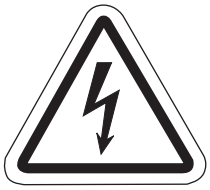			
Electrical Shock Hazard **Disconnect electric before service.** **Heater must be connected to a properly grounded electrical source.**	**Explosion Hazard** **Turn off gas supply to heater before service.**	**Burn Hazard** **Allow heater to cool before service.** **Tubing may still be hot after operation.**	**Cut/Pinch Hazard** **Wear protective gear during installation, operation and service.** **Edges are sharp.**
Failure to follow these instructions can result in death, electric shock, injury or property damage.			

The heater is equipped with a hot-surface ignition system.

11.1 Sequence of Operation

1. Turn the thermostat up. When the thermostat calls for heat, the SmartValve® II will energize. After a short period, power is supplied to the blower motor.
2. When the motor approaches nominal running RPM, the pressure switch closes and signals the ignition module/SmartValve® II.
3. The ignition module/SmartValve® II then energizes the hot-surface igniter for a timed warm-up period (approximately 45 to 60 seconds). After the warm-up period, the gas valve is energized.
4. If a flame is detected, the gas valve remains open and the igniter is de-energized. When the call for heat is satisfied, and the system control mechanism de-energizes the burner line voltage supply, the gas is turned off.
5. If no flame is detected by the flame sensing rod, the igniter is de-energized and the module/SmartValve® II will close and a purge period begins. After the purge, the module/SmartValve® II acts to power the igniter for a second warm-up period and a second trial for ignition period. If flame is still not established, a third purge, warm-up, and trial cycle begins. After four trials, the module/SmartValve® II will lockout for one hour or until reset.
6. If the flame extinguishes during operation, the igniter module will provide multiple trial sequences described in step 5. If ignition is not re-established, the module/SmartValve® II will lockout for one hour or until reset.
7. After lockout, reset by turning down thermostat for five seconds, and then raising it again to desired temperature, or by disconnecting power and then reconnecting.

11.2 To Shut Off Heater

Set thermostat to lowest setting.

Turn OFF electric power to heater.

Turn OFF manual gas valve in the heater supply line.

11.3 To Start Heater

Turn gas valve and electric power OFF and wait five minutes for unburned gases to vent from heater.

Turn ON main gas valve.

Turn ON electric power.

Set thermostat to desired temperature. Burner should light automatically.

11.4 Pre-Season Maintenance and Annual Inspection

To ensure your safety and years of trouble-free operation of the heating system, service and annual inspections must be done by a contractor qualified in the installation and service of gas-fired heating equipment.

Turn off gas and electric supplies before performing service or maintenance. Allow heater to cool before servicing.

Before every heating season, a contractor qualified in the installation and service of gas-fired heating equipment must perform a thorough safety inspection of the heater.

For best performance, the gas, electrical, thermostat connections, tubing, venting, suspensions and overall heater condition should be thoroughly inspected.

NOTE: Gas flow and burner ignition are among the first things that should be inspected.

Please *see Page 51, Section 11.5* for suggested items to inspect.

Installation Code and Annual Inspections:
All installation and service of ROBERTS GORDON® equipment must be performed by a contractor qualified in the installation and service of equipment sold and supplied by Roberts-Gordon LLC and conform to all requirements set forth in the ROBERTS GORDON® manuals and all applicable governmental authorities pertaining to the installation, service, operation and labeling of the equipment.

To help facilitate optimum performance and safety, Roberts-Gordon LLC recommends that a qualified contractor conduct, at a minimum, annual inspections of your ROBERTS GORDON® equipment and perform service where necessary, using only replacement parts sold and supplied by Roberts-Gordon LLC.

11.5 Maintenance Checklist

The Vicinity of the Heater	Do not store or use flammable objects, liquids or vapors near the heater. Immediately remove these items if they are present. *See Page 6, Section 3*.
Vehicles and Other Objects	Maintain the clearances to combustibles. Do not hang anything from, or place anything on, the heater. Make sure nothing is lodged underneath the reflector, in between the tubes or in the decorative or protective grilles (included with select models). Immediately remove objects in violation of the clearances to combustibles. *See Page 6, Section 3*.
Reflector	Support reflector with reflector hanger and support strap. Reflector must not touch tube. Make sure there is no dirt, sagging, cracking or distortion. Do not operate if there is sagging, cracking or distortion. Make sure reflectors are correctly overlapped. *See Page 24, Section 6.6.1*. Clean any debris from top and surface of reflectors with a damp cloth. Check for evidence of animals such as squirrels or birds and remove any nests prior to firing.
Vent Pipe	Venting must be intact. Using a flashlight, look for obstructions, cracks on the pipe, gaps in the sealed areas or corrosion. The area must be free of dirt and dust. Remove any carbon deposits or scale using a wire brush. Check for evidence of animals such as squirrels or birds and remove any nests prior to firing. *See Page 36, Section 8*.
Outside Air Inlet	Inlet must be intact. Look for obstructions, cracks on the pipe, gaps in the sealed areas or corrosion. The area must be free of dirt and dust. Clean and reinstall as required.
Reflector Support Straps	Verify that the reflector support straps are securely clamped to tube and reflector. *See Page 24, Step 6.6.1*. Verify tight and loose screws at reflector overlaps.

Tubes	Make sure there are no cracks. Make sure tubes are connected and suspended securely. *See Page 15, Section 6*. Make sure there is no sagging, bending or distortion. Clean any debris from top of tubes or replace as required. Check the inside of the firing tube with a flashlight. If carbon or scale are present remove the turbulator(s). Scrape out the deposits with a wire brush or rod, or metal plate attached to a wooden pole and replace turbulator(s) in tube. Check for evidence of animals such as squirrels or birds and remove any nests prior to firing.
Gas Line	Check for gas leaks. *See Page 44, Section 9*.
Burner Observation Window	Make sure it is clean and free of cracks or holes. Clean and replace as required.
Drain Hole	Be sure that the drain hole in the bottom of the burner compartment is not blocked or clogged.
Blower Scroll, Wheel and Motor	Compressed air or a vacuum cleaner may be used to clean dust and dirt.
Burner Cup and Orifice	Clear of obstructions (even spider webs will cause problems). Carefully remove any dust and debris from the burner.
Hot-Surface Igniter	Replace if cracked or broken.
Thermostat	There should be no exposed wire or damage to the thermostat. *See Page 46, Section 10*.
Suspension Points	Make sure the heater is hanging securely. Look for signs of wear on the chain or ceiling. *See Page 16, Figure 14*.
Decorative and Protective Grille (optional)	The grille must be securely attached. Check that the side reflector extensions are installed correctly and secured in place if necessary (Decorative grille only). *See Page 33, Section 7.5 and Page 34, Section 7.6* Make sure shield is installed correctly and secured in place if necessary. (Decorative grille only.) *See Page 33, Section 7.5.2*.
Lower Clearance Shield (optional)	The lower shield must be securely attached. Inspect shield support straps and lower clearance shield anchor points. *See Page 32, Section 7.4*. Make sure shield is installed correctly and secured in place if necessary. *See Page 32, Section 7.4*.
Wall Tag	If wall tag is present, make sure it is legible and accurate. Please contact Roberts-Gordon LLC or your ROBERTS GORDON® independent distributor, if you need a wall tag. *See Page 4, Section 2.1*.
Safety Labels	Product safety signs or labels should be replaced by the product user when they are no longer legible. Please contact Roberts-Gordon LLC or your ROBERTS GORDON® independent distributor to obtain replacement signs or labels. *See Page 1, Figure through Page 3, Figure 2*.

SECTION 12: TROUBLESHOOTING

⚠ DANGER

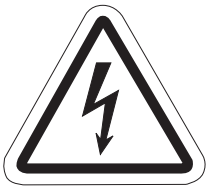

Electrical Shock Hazard

Disconnect electric before service.

Heater must be properly grounded.

Failure to follow these instructions can result in death or electrical shock.

⚠ WARNING

Fire Hazard	**Explosion Hazard**	**Burn Hazard**	**Cut/Pinch Hazard**
Keep all flammable objects, liquids and vapors the minimum required clearances to combustibles away from heater. **Some objects will catch fire or explode when placed close to heater.**	**Turn off gas supply to heater before service.**	**Allow heater to cool before service.** **Tubing may still be hot after operation.**	**Wear protective gear during installation, operation and service.** **Edges are sharp.**

Failure to follow these instructions can result in death, injury or property damage.

12.1 Honeywell SmartValve® II Troubleshooting

This heater is supplied with the Honeywell SmartValve® II control system. This system is equipped with a diagnostic function that will assist in performing troubleshooting. The LED (Light Emitting Diode) indicator at the top of the SmartValve® II control will flash in various patterns to indicate status. The LED status indication chart provided below gives a summary of possible faults.

LED Status	Indicates
Off	No power to the control
Bright-Dim	Normal Operation.This indication shows whenever the system is powered, unless some abnormal event has occurred.
2 Flashes	Pressure switch remains closed longer than 30 seconds after a call for heat begins (pressure switch stuck closed). The SmartValve® II checks the status of the pressure switch contacts and must see a change in the contact with every firing cycle. Placing a jumper at the switch out of sequence will result in a fault, with the LED indicator flashing 2 times.
3 Flashes	Pressure switch remains open longer than 30 seconds after combustion air blower is energized. Check for correct blower operation, blower intake obstructions, pressure switch tubing and wiring.
4 Flashes	Limit string open, 2" white jumper wire on valve is loose.
5 Flashes	Flame signal sensed out of proper sequence.
6 Flashes	System Lockout. Flame sensing circuit is not functioning properly. Perform the checks following the "Does the burner stay lit?" bubble in the troubleshooting flow chart *on Page 55, Section 12.2*.

⚠ WARNING

Electrical Shock Hazard

Do not disconnect ground leads inside heater.

Do not interchange grounded and ungrounded leads on transformer or ignition module.

Failure to follow these instructions can result in death or electrical shock.

Page 57, Section 12.3 will provide the information needed to test the manifold gas pressure setting. *Page 55, Section 12.2* will guide you through several troubleshooting steps to determine possible problems with the systems.

12.2 Troubleshooting Flow Chart

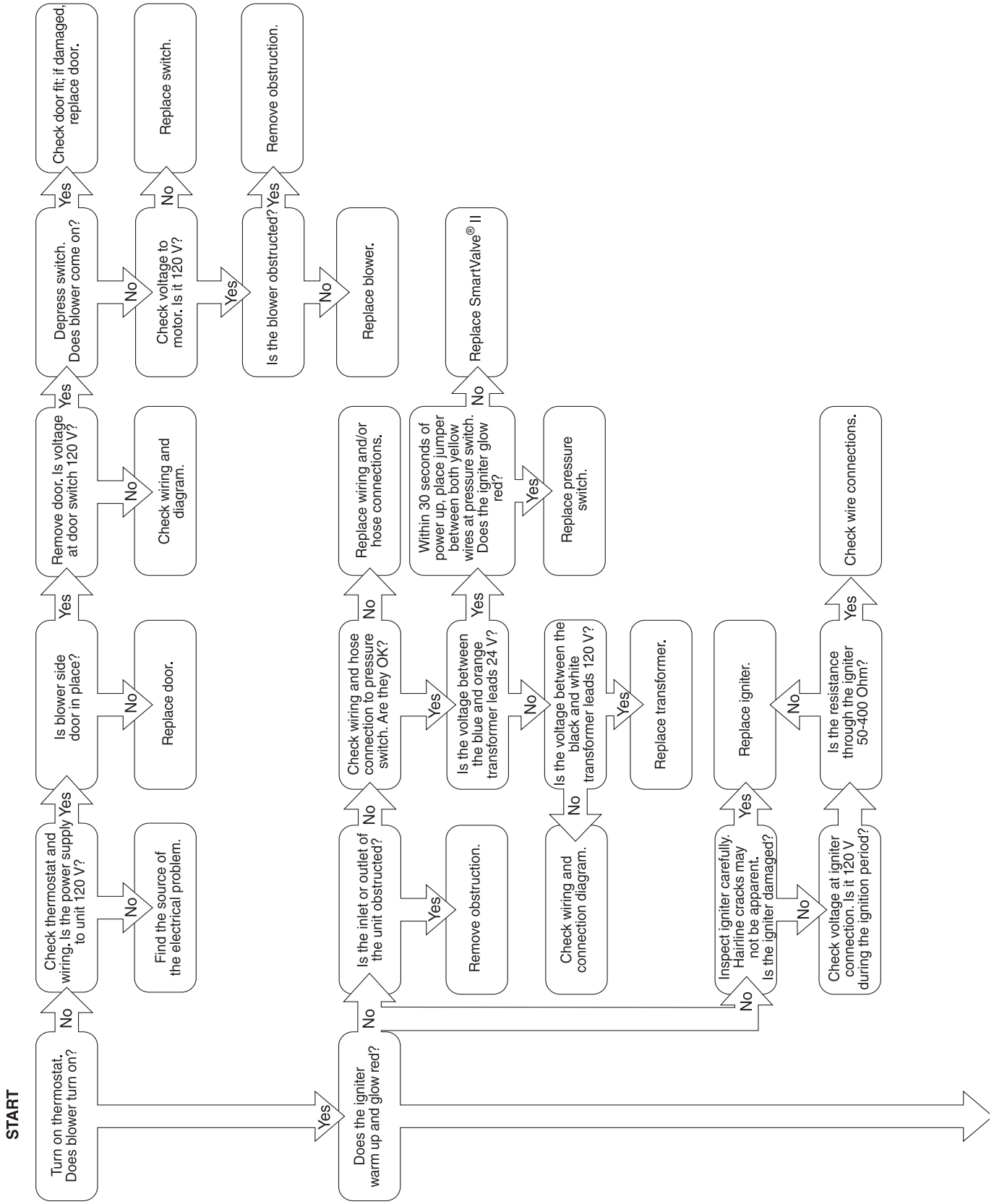

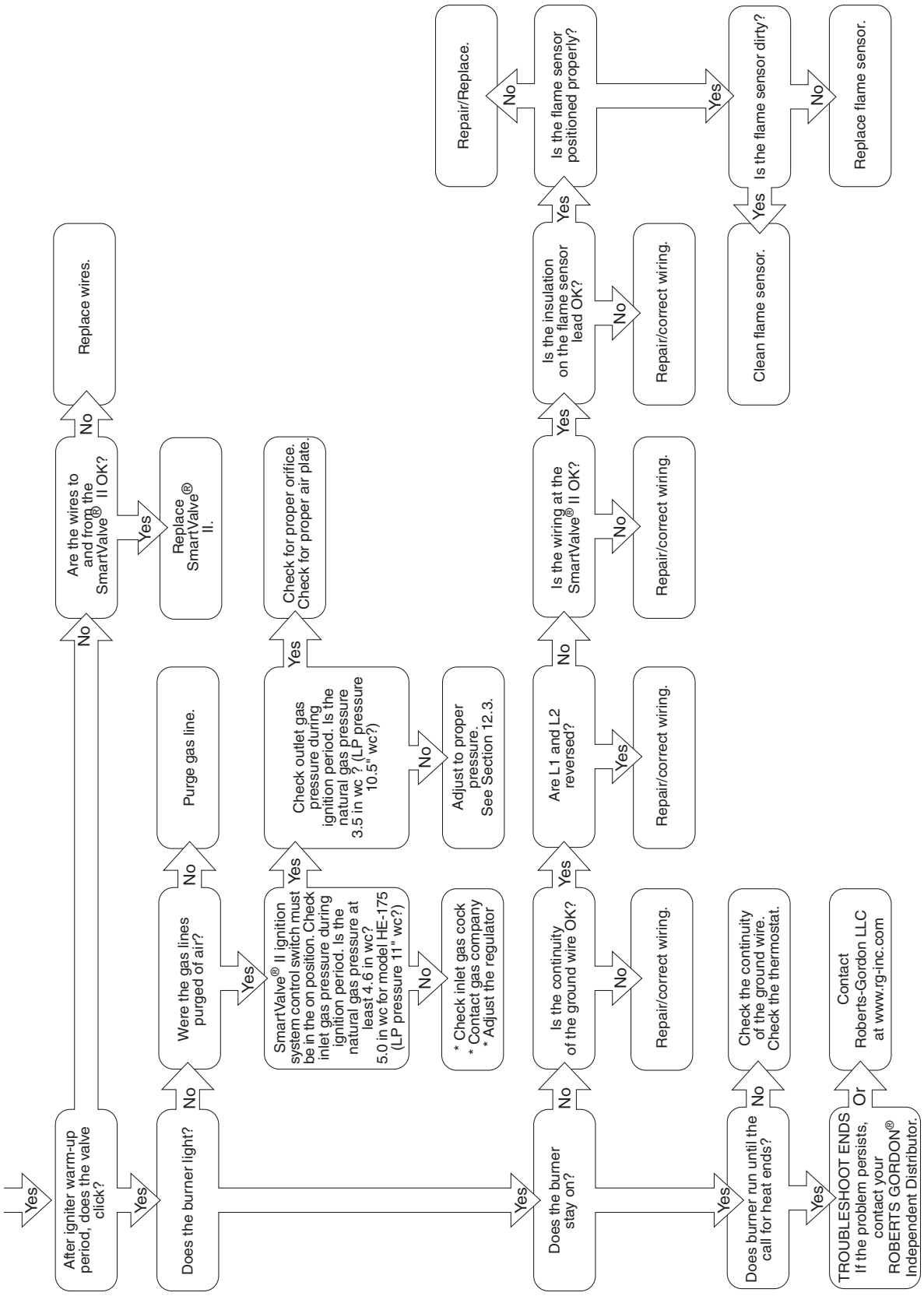
Yes
After igniter warm-up period, does the valve click?
No
Are the wires to and from the SmartValve® II OK?
No
Replace wires.
Yes
Replace SmartValve® II.
Yes
Does the burner light?
No
Were the gas lines purged of air?
No
Purge gas line.
Yes
SmartValve® II ignition system control switch must be in the on position. Check inlet gas pressure during ignition period. Is the natural gas pressure at least 4.6 in wc? 5.0 in wc for model HE-175 (LP pressure 11" wc?)
Yes
Check outlet gas pressure during ignition period. Is the natural gas pressure 3.5 in wc ? (LP pressure 10.5" wc?)
Yes
Check for proper orifice. Check for proper air plate.
No
Adjust to proper pressure. See Section 12.3.
No
* Check inlet gas cock
* Contact gas company
* Adjust the regulator
Yes
Does the burner stay on?
No
Is the continuity of the ground wire OK?
Yes
Are L1 and L2 reversed?
No
Is the wiring at the SmartValve® II OK?
Yes
Is the insulation on the flame sensor lead OK?
Yes
Is the flame sensor positioned properly?
Yes
Is the flame sensor dirty?
Yes
Clean flame sensor.
No
Replace flame sensor.
No
Repair/Replace.
No
Repair/correct wiring.
No
Repair/correct wiring.
No
Repair/correct wiring.
Yes
Does burner run until the call for heat ends?
No
Check the continuity of the ground wire. Check the thermostat.
Yes
TROUBLESHOOT ENDS If the problem persists, contact your ROBERTS GORDON® Independent Distributor.
Or
Contact Roberts-Gordon LLC at www.rg-inc.com

12.3 Manifold Gas Pressure Setting

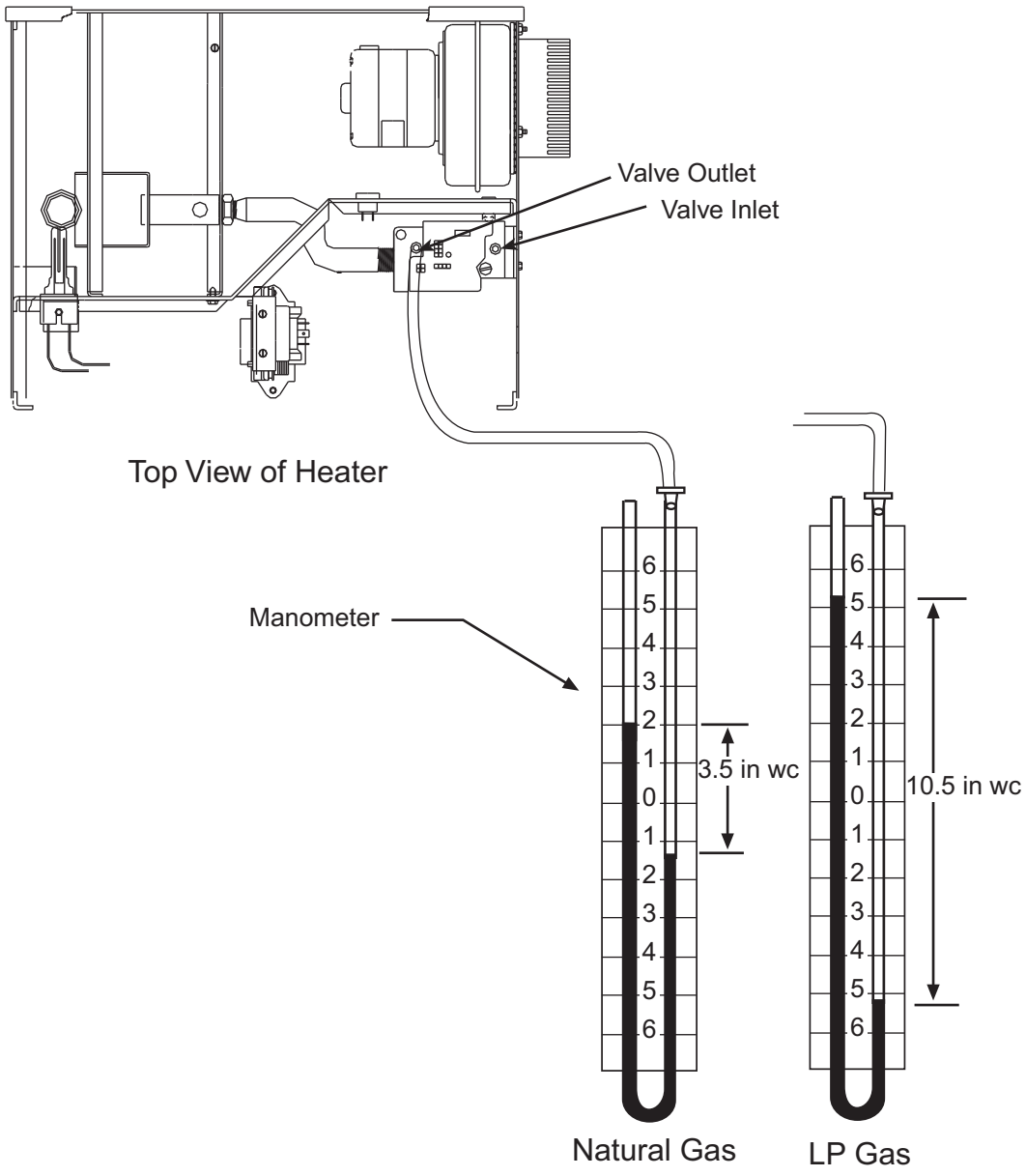

SECTION 13: REPLACEMENT PARTS

⚠ DANGER | **⚠ WARNING**

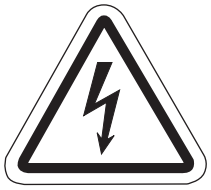

Electrical Shock Hazard | **Explosion Hazard** | **Fire Hazard** | **Carbon Monoxide Hazard**

Use only genuine ROBERTS GORDON® replacement parts per this installation, operation and service manual.

Failure to follow these instructions can result in death, electric shock, injury or property damage.

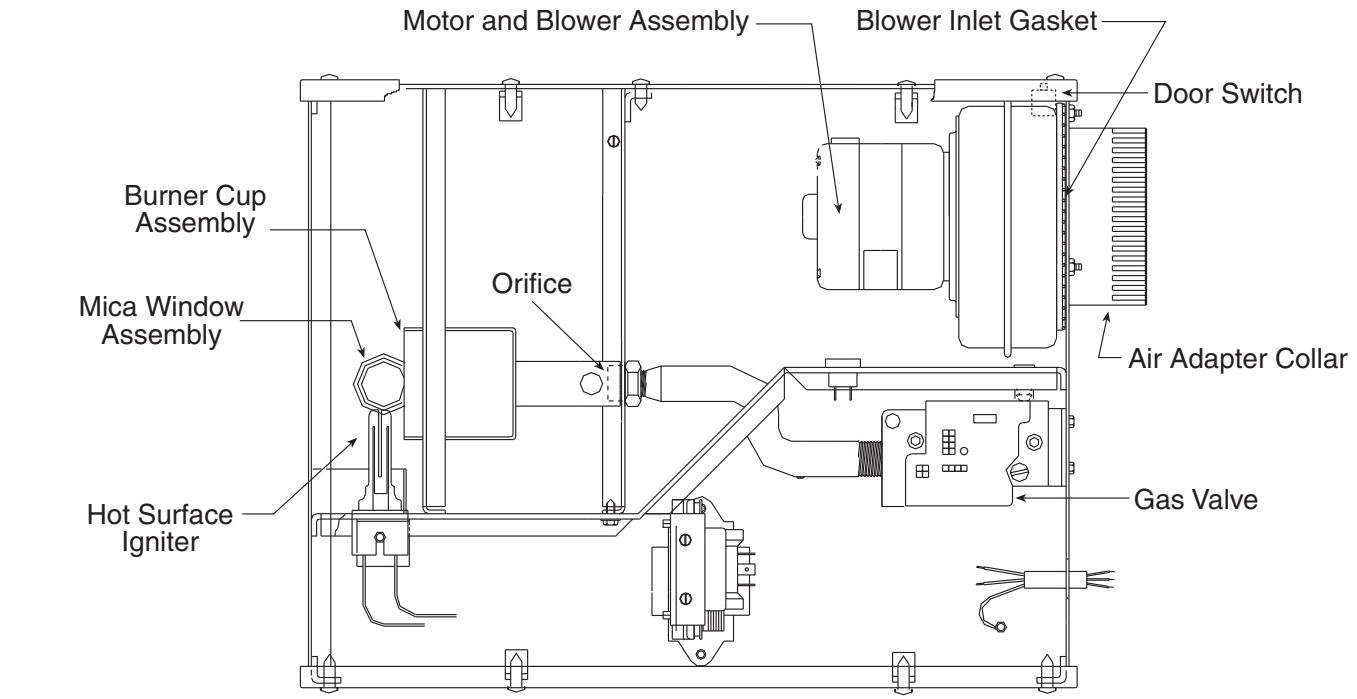
Motor and Blower Assembly
Blower Inlet Gasket
Door Switch
Burner Cup Assembly
Orifice
Mica Window Assembly
Air Adapter Collar
Hot Surface Igniter
Gas Valve

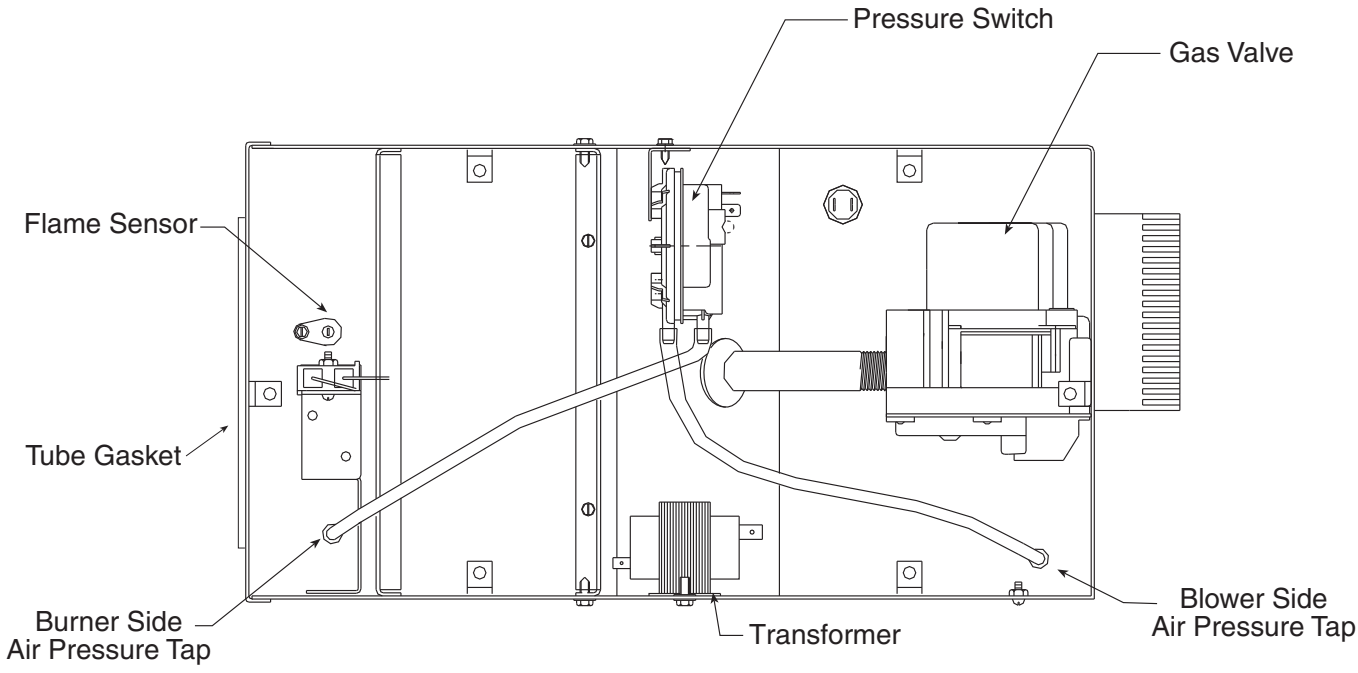
Pressure Switch
Gas Valve
Flame Sensor
Tube Gasket
Burner Side Air Pressure Tap
Transformer
Blower Side Air Pressure Tap

Description	Part Number
Gas Valve (Natural)	90068300
Gas Valve (LP)	90068302
Tube Gasket	02568200
Blower Inlet Gasket	03050900
Motor and Blower Assembly	90708600-P
Air Adapter Collar	91911700
Door Switch	90436800
Burner Cup Assembly	03020100
Hot Surface Igniter	90436603K
Mica Window Assembly	02553203
Flame Sensor	90439300
Transformer	90436900K
Gasket - Valve	03200100
Pressure Switch:	
(175)	90439802K
(100)	90439803K
(80,150)	90439810K
(40, 60, 125)	90439805K

SECTION 14: GENERAL SPECIFICATIONS

14.1 Material Specifications

14.1.1 Reflectors

.024 Aluminum or .024 Stainless Steel Type 304

14.2 Heater Specifications

14.2.1 Ignition

Honeywell® SmartValve® II combines gas valve and hot surface electronic ignition control. Fully automatic, four-try, 100% shut-off, prepurge, auto reset, LED indicator status.

14.3 Suspension Specifications

Hang heater with materials with a minimum working load of 75 lbs (33 kg). *See Page 16, Figure 14*.

14.4 Controls Specifications

Time switches, thermostats, etc. can be wired into the electrical supply. External controls supplied as an optional extra.

General Specifications for the heaters are as follows:

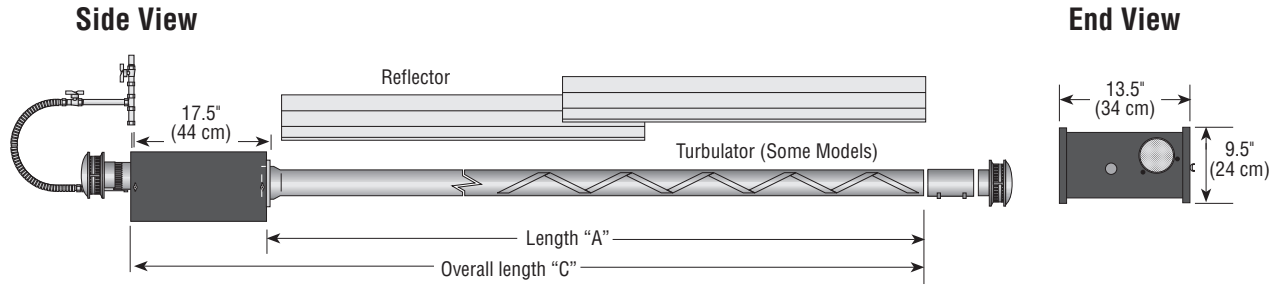

Model	Heat Input Rate (Bth/h) x (1000)	Length "A"	Recommended Minimum Mounting Height* Space	Spot
ET3-40	40	10' (3 m)	8'-10' (2.4 - 3 m)	8' (2.3 m)
ET3-60	60	20' (6 m)	10'-12' (3 - 3.6 m)	9' (2.7 m)
ET3-80	80	20' (6 m)	12'-15' (3.6 - 4.5 m)	11' (3.3 m)
ET3-100	100	30' (9 m)	12'-15' (3.6 - 4.5 m)	12' (3.7 m)
ET3-125	125	40' (12 m)	15'-20' (4.5 - 6 m)	15' (4.6 m)
ET3-150	150	50' (15 m)	20'-25' (6 - 7.6 m)	20' (6.1 m)
ET3-175	175	60' (15 m)	25' (7.6 m)	23' (7 m)

**See Page 6, Section 3* for clearances to combustibles. Recommended mounting height for outdoor use will generally be lower than recommended spot heating heights, (8' (2.3 m) minimum).

GAS PRESSURE AT MANIFOLD:

Natural Gas: 3.5" wc

LP Gas: 10.5" wc

PIPE CONNECTION:

3/4" NPT

DIMENSIONS:

Vent Connection Size: 4" (10 cm)

Outside Air Connection Size: 4" (10 cm)

Refer to figure above for dimensional information.

GAS INLET PRESSURE:

Natural Gas:

for 40,60,80,100,125,150 4.6" wc Minimum

for 175 5.0" wc Minimum

14.0" wc Maximum

LP Gas: 11.0" wc Minimum

14.0" wc Maximum

ELECTRICAL RATING (ALL MODELS):

120V - 60 Hz., 1.0 A (run) 5.0 A (Start)

SECTION 15: THE ROBERTS GORDON® ENERGYTUBE® 3 WARRANTY

ROBERTS-GORDON LLC WILL PAY FOR:

Within 36 months from date of purchase by buyer or 42 months from date of shipment by Roberts-Gordon LLC (whichever occurs first), replacement parts will be provided free of charge for any part of the product which fails due to a manufacturing or material defect.

Roberts-Gordon LLC will require the part in question to be returned to the factory. Roberts-Gordon LLC will, at its sole discretion, repair or replace after determining the nature of the defect and disposition of part in question.

ROBERTS GORDON® Replacement Parts are warranted for a period of 12 months from date of shipment from Roberts-Gordon LLC or the remaining ROBERTS GORDON® ENERGYTUBE® 3 warranty.

ROBERTS-GORDON LLC WILL NOT PAY FOR:

Service trips, service calls and labor charges.

Shipment of replacement parts.

Claims where the total price of the goods have not been paid.

Damage due to:

- Improper installation, operation or maintenance.
- Misuse, abuse, neglect, or modification of the ROBERTS GORDON® ENERGYTUBE® 3 in any way.
- Use of the ROBERTS GORDON® ENERGYTUBE® 3 for other than its intended purpose.
- Incorrect gas or electrical supply, accident, fire, floods, acts of God, war, terrorism, or other casualty.
- Improper service, use of replacement parts or accessories not specified by Roberts-Gordon.
- Failure to install or maintain the ROBERTS GORDON® ENERGYTUBE® 3 as directed in the Installation, Operation and Service manual.
- Relocation of the ROBERTS GORDON® ENERGYTUBE® 3 after initial installation.
- The use of the ROBERTS GORDON® ENERGYTUBE® 3 in a corrosive atmosphere containing contaminants.
- The use of the ROBERTS GORDON® ENERGYTUBE® 3 in the vicinity of a combustible or explosive material.
- Any defect in the ROBERTS GORDON® ENERGYTUBE® 3 arising from a drawing, design, or specification supplied by or on behalf of the consumer.
- Damage incurred during shipment. Claim must be filed with carrier.

WARRANTY IS VOID IF:

The ROBERTS GORDON® ENERGYTUBE® 3 is not installed by a contractor qualified in the installation and service of gas fired heating equipment.

You cannot prove original purchase date and required annual maintenance history.

The data plate and/or serial number are removed, defaced, modified or altered in any way.

The ownership of the ROBERTS GORDON® ENERGYTUBE® 3 is moved or transferred. This warranty is nontransferable.

Roberts-Gordon LLC is not permitted to inspect the damaged equipment and/or component parts

.

READ YOUR INSTALLATION, OPERATION AND SERVICE MANUAL

If you have questions about your equipment, contact your installing professional. Should you need Replacement Parts or have additional questions, call or write:

Roberts-Gordon LLC
1250 William Street
P.O. Box 44
Buffalo, New York 14240-0044
Telephone: +1.716.852.4400
Fax: +1.716.852.0854
Toll Free: 800.828.7450

www.rg-inc.com
www.radiantheaters.com

Roberts-Gordon LLC's liability, and your exclusive remedy, under this warranty or any implied warranty (including the implied warranties of merchantability and fitness for a particular purpose) is limited to providing replacement parts during the term of this warranty. Some jurisdictions do not allow limitations on how long an implied warranty lasts, so this limitation may not apply to you. There are no rights, warranties or conditions, expressed or implied, statutory or otherwise, other than those contained in this warranty.

Roberts-Gordon LLC shall in no event be responsible for incidental or consequential damages or incur liability for damages in excess of the amount paid by you for the ROBERTS GORDON® ENERGYTUBE® 3. Some jurisdictions do not allow the exclusion or limitation of incidental or consequential damages, so this limitation or exclusion may not apply to you. This warranty gives you specific legal rights, and you may also have other rights which vary from jurisdiction to jurisdiction.

Roberts-Gordon LLC shall not be responsible for failure to perform under the terms of this warranty if caused by circumstances out of its control, including but not limited to war, fire, flood, strike, government or court orders, acts of God, terrorism, unavailability of supplies, parts or power. No person is authorized to assume for Roberts-Gordon LLC any other warranty, obligation or liability.

LIMITATIONS ON AUTHORITY OF REPRESENTATIVES:

No representative of Roberts-Gordon LLC, other than an Executive Officer, has authority to change or extend these provisions. Changes or extensions shall be binding only if confirmed in writing by Roberts-Gordon LLC's duly authorized Executive Officer.

ROBERTS GORDON
Infrared Heating

OWNER WARRANTY REGISTRATION CARD

Mail or Fax to:

Roberts Gordon LLC •1250 William Street, P.O. Box 44 • Buffalo, NY 14240-0044 • Phone: 716-852-4400 • Fax: 716-852-0854
Toll Free: 800-828-7450 • www.rg-inc.com

About the Owner:

Name:_____

Address:_____City:_____State:_____Zip Code:_____

Phone:_____ Fax:_____ E-mail:_____

About the Installer:

Name:_____

Address:_____City:_____State:_____Zip Code:_____

Phone:_____Fax:_____E-mail:_____

Purchased From (if different than installer):

Name:_____

Address:_____City:_____State:_____Zip Code:_____

Phone:_____ Fax:_____ E-mail:_____

About your Heater:

Model#:_____ Serial #:_____ Fuel:_____Installation Date:_____

Type of Installation (check one):

o Automotive	o Manufacturing	o Warehouse	o Recreational	o Aircraft
o Public Building	o Office	o Retail	o Agricultural	o Other_____

Installation Code and Annual Inspections: All installation and service of ROBERTS GORDON® equipment must be performed by a contractor qualified in the installation and service of equipment sold and supplied by Roberts-Gordon LLC and conform to all requirements set forth in the ROBERTS GORDON® manuals and all applicable governmental authorities pertaining to the installation, service, operation and labeling of the equipment.

To help facilitate optimum performance and safety, Roberts-Gordon LLC recommends that a qualified contractor conduct, at a minimum, annual inspections of your ROBERTS GORDON® equipment and perform service where necessary, using only replacement parts sold and supplied by Roberts-Gordon LLC.

These products are not for residential use.

This product is intended to assist licensed professionals in the exercise of their professional judgment.

© 2012 Roberts-Gordon LLC - All rights reserved. No part of this work covered by the copyrights herein my be reproduced or copied in any form or by any means – graphic, electronic, or mechanical, including photcopying, recording, taping, or information storage and retrieval systems – without written permission of Roberts Gordon LLC. Printed in the U.S.A.

Attach this information to a wall near the ROBERTS GORDON® heater.

ROBERTS GORDON®
Infrared Heating

Read the Installation, Operation, and Service Manual thoroughly before installation, operation, or service.

Know your model number and installed configuration.

Model number and installed configuration are found on the burner and in the Installation, Operation and Service Manual.

Write the largest clearance dimensions with permanent ink according to your model number and configuration in the open spaces below.

OPERATING INSTRUCTIONS

1. STOP! Read all safety instructions on this information sheet.
2. Open the manual gas valve in the heater supply line.
3. Turn on electric power to the heater.
4. Set the thermostat to desired setting.

TO TURN OFF THE HEATER

1. Set the thermostat to off or the lowest setting.

IF THE HEATER WILL NOT OPERATE, TO ENSURE YOUR SAFETY, FOLLOW THESE INSTRUCTIONS TO SHUT DOWN YOUR HEATER

1. Set the thermostat to off or the lowest setting.
2. Turn off electric power to the heater.
3. Turn off the manual gas valve in the heater supply line.
4. Call your registered installer/contractor qualified in the installation and service of gas-fired heating equipment.

⚠WARNING

Fire Hazard

Keep all flammable objects, liquids and vapors the minimum required clearances to combustibles away from heater.

Some objects will catch fire or explode when placed close to heater.

Failure to follow these instructions can result in death, injury or property damage.

Maintain_____clearance to the side and _____ clearance below the heater from vehicles and combustible materials.

Roberts-Gordon LLC
1250 William Street
P.O. Box 44
Buffalo, NY 14240-0044 USA
Telephone: +1.716.852.4400
Fax: +1.716.852.0854
Toll Free: 800.828.7450

Roberts-Gordon Europe Limited
Unit A, Kings Hill Business Park
Darlaston Road, Wednesbury
West Midlands WS10 7SH UK
Telephone: +44 (0)121 506 7700
Fax: +44 (0)121 506 7701

Service Telephone: +44 (0)121 506 7709
Service Fax: +44 (0)121 506 7702
E-mail: uksales@rg-inc.com
E-mail: export@rg-inc.com

Installation Code and Annual Inspections:
All installation and service of ROBERTS GORDON® equipment must be performed by a contractor qualified in the installation and service of equipment sold and supplied by Roberts-Gordon and conform to all requirements set forth in the ROBERTS GORDON® manuals and all applicable governmental authorities pertaining to the installation, service, operation and labeling of the equipment. To help facilitate optimum performance and safety, Roberts-Gordon recommends that a qualified contractor conduct, at a minimum, annual inspections of your ROBERTS GORDON® equipment and perform service where necessary, using only replacement parts sold and supplied by Roberts-Gordon.

Further Information: Applications, engineering and detailed guidance on systems design, installation and equipment performance is available through ROBERTS GORDON® representatives. Please contact us for any further information you may require, including the Installation, Operation and Service Manual.

This product is not for residential use.

© 2012 Roberts-Gordon LLC All rights reserved. No part of this work covered by the copyrights herein may be reproduced or copied in any form or by any means – graphic, electronic, or mechanical, including photocopying, recording, taping, or information storage and retrieval systems – without written permission of Roberts-Gordon LLC.

www.rg-inc.com Printed in U.S.A. P/N 91037912 Rev. J