FOR YOUR SAFETY
If you smell gas:

1. **Open windows.**
2. **DO NOT try to light any appliance.**
3. **DO NOT use electrical switches.**
4. **DO NOT use any telephone in your building.**
5. **Extinguish any open flame.**
6. **Leave the building.**
7. **Immediately call your local gas supplier after leaving the building. Follow the gas supplier's instructions.**
8. **If you cannot reach your gas supplier, call the Fire Department.**

⚠ WARNING

Fire Hazard

Keep all flammable objects, liquids and vapors the minimum required clearances to combustibles away from heater.

Some objects will catch fire or explode when placed close to heater.

Failure to follow these instructions can result in death, injury or property damage.

Model HEV

Gas-Fired, Low Intensity Unitary Heater for Harsh Environments

Installation, Operation & Service Manual

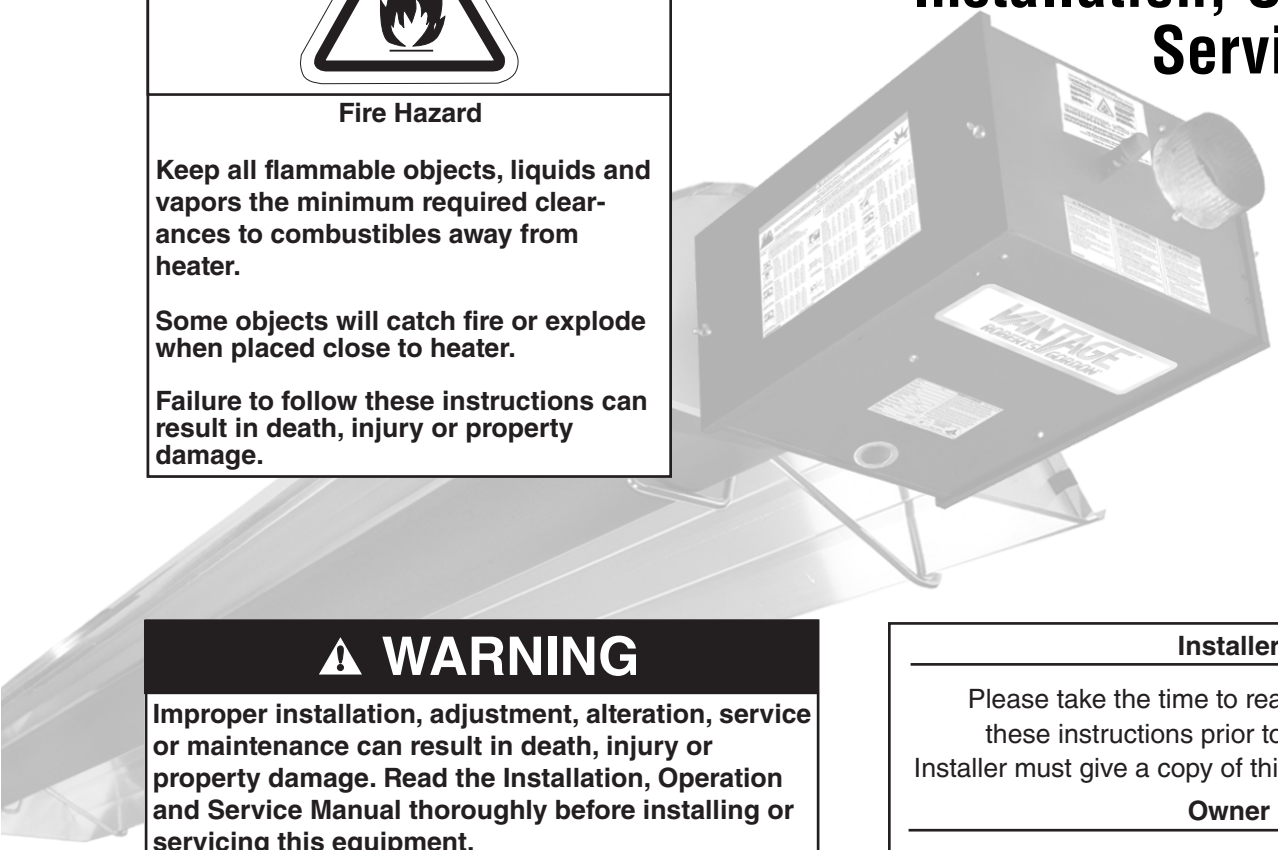

HEV-40
HEV-60
HEV-80
HEV-100
HEV-125
HEV-150
HEV-175

⚠ WARNING

Improper installation, adjustment, alteration, service or maintenance can result in death, injury or property damage. Read the Installation, Operation and Service Manual thoroughly before installing or servicing this equipment.

Installation must be done by a contractor qualified in the installation and service of gas-fired heating equipment or your gas supplier.

Installer

Please take the time to read and understand these instructions prior to any installation. Installer must give a copy of this manual to the owner.

Owner

Keep this manual in a safe place in order to provide your service technician with necessary information.

Roberts-Gordon LLC
1250 William Street
P.O. Box 44
Buffalo, New York 14240-0044
Telephone: +1.716.852.4400
Fax: +1.716.852.0854
Toll Free: 800.828.7450

www.robertsgordon.com

© 2017 Roberts-Gordon LLC

P/N 138100NA Orig 11/17

TABLE OF FIGURES

TABLE OF CONTENTS

© 2017 Roberts-Gordon LLC

All rights reserved. No part of this work covered by the copyrights herein may be reproduced or copied in any form or by any means - graphic, electronic, or mechanical, including photocopying, recording, taping or information storage and retrieval systems - without the written permission of Roberts-Gordon LLC.

Printed in U.S.A.

SECTION 1: HEATER SAFETY

Your Safety is Important to Us! This symbol is used throughout the manual to notify you of possible fire, electrical or burn hazards. Please pay special attention when reading and following the warnings in these sections.

Installation, service and annual inspection of heater must be done by a contractor qualified in the installation and service of gas-fired heating equipment.

Read this manual carefully before installation, operation or service of this equipment.

This heater is designed for heating nonresidential indoor spaces. Do not install in residential spaces. This heater is not certified to meet the requirements of NFPA30A-2012 Section 7.6.6. (maximum tube temperature of 750 °F (399 °C)). Do not install this heater in facilities where compressed natural gas (CNG) or liquid natural gas (LNG) are present. These instructions, the layout drawing, local codes and ordinances, and applicable standards that apply to gas piping, electrical wiring, venting, etc. must be thoroughly understood before proceeding with the installation.

Protective gear is to be worn during installation, operation and service in accordance to the Occupational Safety and Hazard Administration (OSHA). Gear must be in accordance to NFPA 70E, latest revision when working with electrical components. Thin sheet metal parts have sharp edges. To prevent injury, the use of work gloves is recommended. The use of gloves will also prevent the transfer of body oils from the hands to the surface of the reflector.

Before installation, check that the local distribution conditions, nature of gas and pressure, and adjustment of the appliance are compatible.

This heater must be applied and operated under the general concepts of reasonable use and installed using best building practices.

This appliance is not intended for use by persons (including children) with reduced physical, sensory or mental capabilities, or lack of experience and knowledge, unless they have been given supervision or instruction concerning use of the appliance by a person responsible for their safety. Children should be supervised to ensure that they do no play with the appliance.

For additional copies of the Installation, Operation and Service Manual, please contact Roberts-Gordon LLC.

1.1 Manpower Requirements

To prevent personal injury and damage to the heater, two persons will be required for installation.

1.2 Safety Labels and Their Placement

Product safety signs or labels should be replaced by the product user when they are no longer legible. Please contact Roberts-Gordon or your ROBERTS GORDON® independent distributor to obtain replacement signs or labels. *See Page 2, Figure 1 through Page 3, Figure 2*.

1.3 California Proposition 65

In accordance with California Proposition 65 requirements, a warning label must be placed in a highly visible location on the outside of the equipment (i.e., near equipment's serial plate). See label placement drawing *on Page 2, Figure 1* for label location. Avoid placing label on areas with extreme heat, cold, corrosive chemicals or other elements. To order additional labels, please contact Roberts-Gordon LLC or your ROBERTS GORDON® independent distributor.

FIGURE 1: Top and Bottom Panel Label Placement

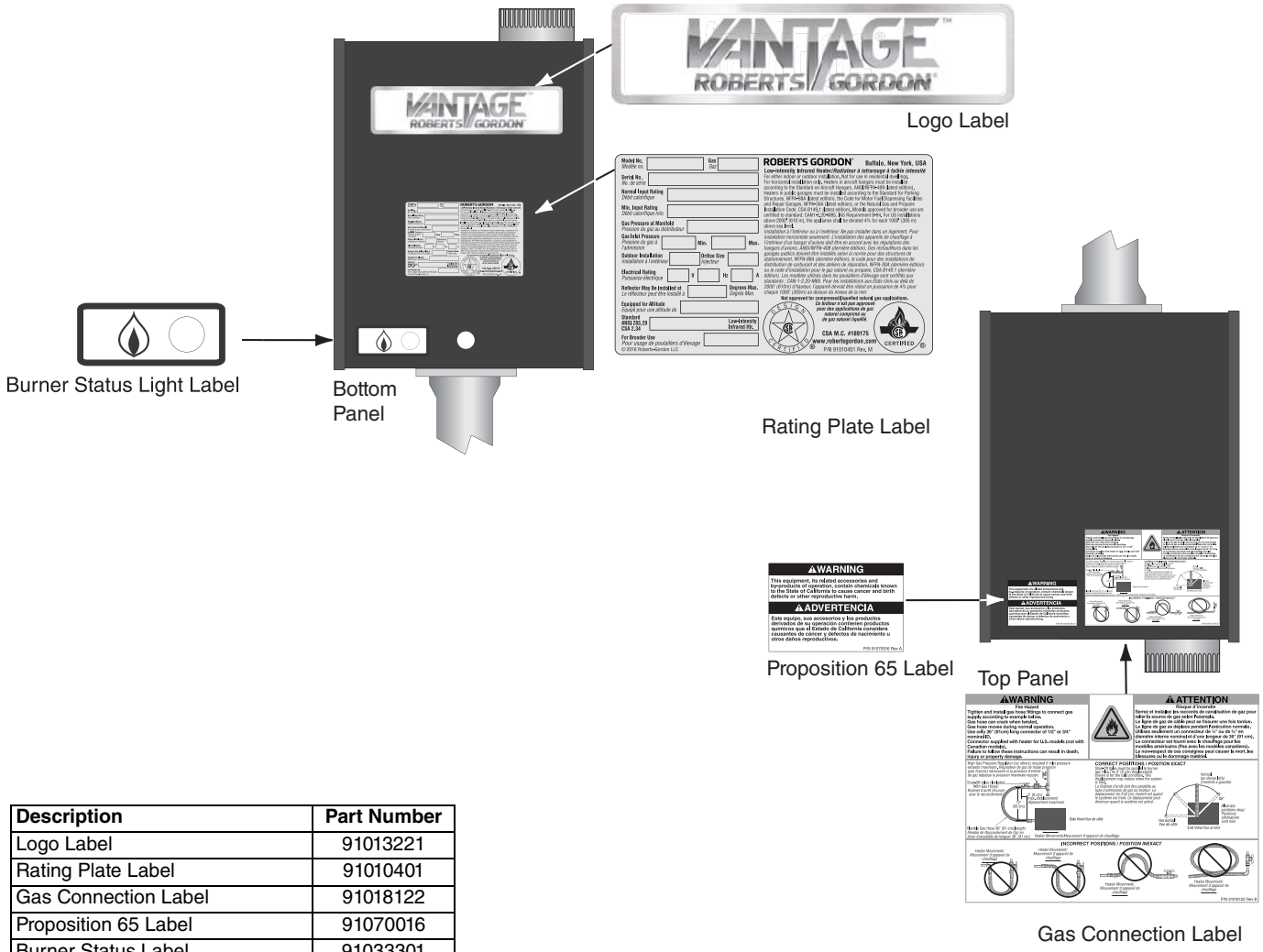

Description	Part Number
Logo Label	91013221
Rating Plate Label	91010401
Gas Connection Label	91018122
Proposition 65 Label	91070016
Burner Status Label	91033301

FIGURE 2: Side and Back Panel Label Placement

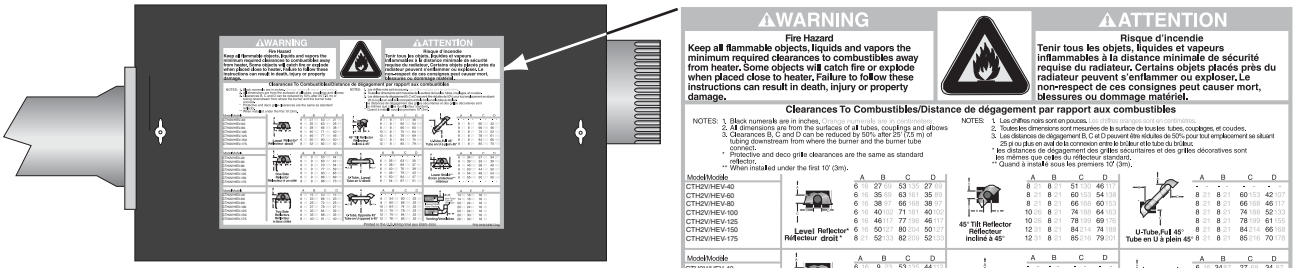

Control Side Panel

Clearances to Combustibles Label

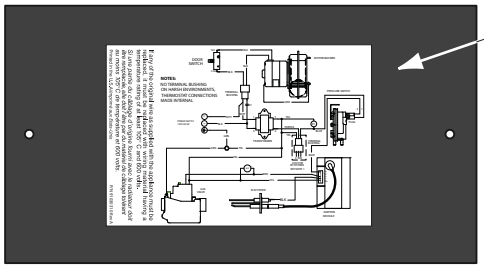

Control Side Panel (Inside)

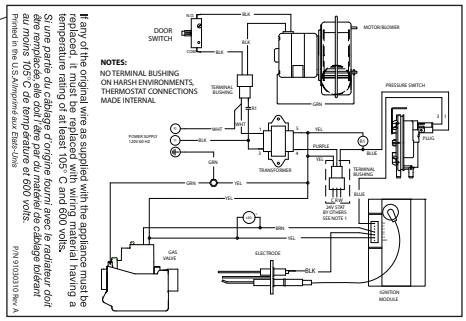

Wiring Label

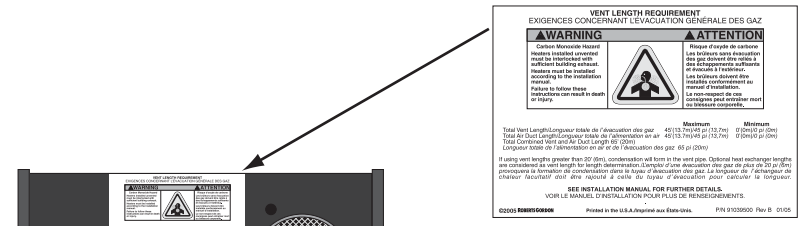

Vent Length Label

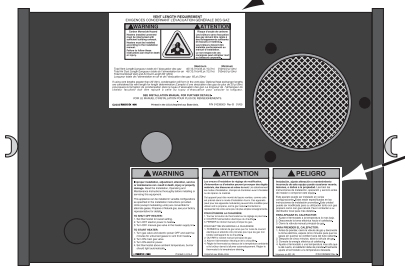

Back Panel

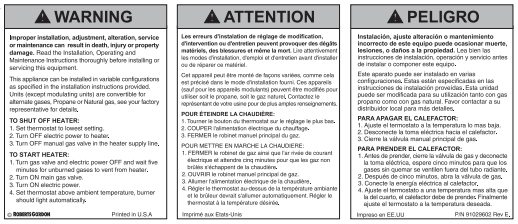

Lighting Instruction Plate Label

Description	Part Number
Lighting Instruction Plate Label	91029602
Wiring Label	91030310
Clearances to Combustibles Label	91013436
Vent Length Label	91039500

SECTION 2: INSTALLER RESPONSIBILITY

The installer is responsible for the following:

- To install the heater, as well as the gas and electrical supplies, in accordance with applicable specifications and codes. Roberts-Gordon recommends the installer contact a local Building Inspector or Fire Marshal for guidance.
- To use the information given in a layout drawing and in the manual together with the cited codes and regulations to perform the installation.
- To install the heater in accordance with the clearances to combustibles.
- To furnish all needed materials not furnished as standard equipment.
- To plan location of supports.
- To provide access to burners for servicing on all sides for burner removal.
- To provide the owner with a copy of this installation, operation and service manual.
- To never use heater as support for a ladder or other access equipment and never hang or suspend anything from heater.
- To ensure there is adequate air circulation around the heater and to supply air for combustion, ventilation and distribution in accordance with local codes.
- To safely and adequately install heater using materials with a minimal working load of 75 lbs (33 kg).
- To ensure the heater is placed in a approved application.

2.1 Wall Tag

A laminated wall tag is available for the heater as a permanent reminder of the safety instructions and the importance of the required clearances to combustibles. Please contact Roberts-Gordon or your ROBERTS GORDON® independent distributor to obtain the wall tag. Affix the tag by peeling off the backing of the adhesive strips on the rear surface and position the tag on a wall near the heater (e.g. thermostat or ROBERTS GORDON® Controller).

A copy of the wall tag (P/N 91037912) is illustrated on the back cover. For an immediate solution, you may affix this copy on the wall near the heater.

Know your model number and installed configuration. Model number and installed configuration are found on the burner and in the Installation, Operation and Service Manual. *See Page 5, Figure 3 through Page 8, Figure 12*. Write the proper clearance dimensions in permanent ink according to your model number and configuration in the open spaces on the tag.

2.2 Corrosive Chemicals

⚠ CAUTION

Product Damage Hazard

Do not use heater in area containing corrosive chemicals.

Refer to appropriate Material Safety Data Sheets (MSDS).

Failure to follow these instructions can result in product damage.

Roberts-Gordon cannot be responsible for ensuring that all appropriate safety measures are undertaken prior to installation; this is entirely the responsibility of the installer. It is essential that the contractor, the sub-contractor, or the owner identifies the presence of combustible materials, corrosive chemicals or halogenated hydrocarbons* anywhere in the premises.

** **Halogenated Hydrocarbons** are a family of chemical compounds characterized by the presence of halogen elements (fluorine, chlorine, bromine, etc.). These compounds are frequently used in refrigerants, cleaning agents, solvents, etc. If these compounds enter the air supply of the burner, the life span of the heater components will be greatly reduced. An outside air supply must be provided to the burners whenever the presence of these compounds is suspected. Warranty will be invalid if the heater is exposed to halogenated hydrocarbons.*

2.3 National Standards and Applicable Codes

All appliances must be installed in accordance with the latest revision of the applicable standards and national codes. This refers also to the electric, gas and venting installation. Note: Additional standards for installations in Public Garages, Aircraft Hangars, etc. may be applicable.

SECTION 3: CLEARANCES TO COMBUSTIBLES

3.1 Required Clearances to Combustibles

Clearances are the required distances that combustible objects must be away from the heater to prevent serious fire hazards. Combustibles are materials that may catch on fire and include common items such as wood, paper, rubber, fabric, etc. **Maintain clearances to combustibles at all times for safety.**

Clearances for all heater models are located on the burner of the heater and *on Page 5, Figure 3 through Page 8, Figure 12* in this manual. Check the clearances on each burner for the model heater being installed to make sure the product is suitable for your application and the clearances are maintained. Read and follow the safety guidelines below:

- Keep gasoline or other combustible materials including flammable objects, liquids, dust or vapors away from this heater or any other appliance.
- The stated clearances to combustibles represents a surface temperature of 90° F (32°C) above room temperature. Building materials with a low heat tolerance (such as plastics, vinyl siding, canvas, triply, etc) may be subject to degradation at lower temperatures. It is the installer's responsibility to assure that adjacent materials are protected from degradation.
- Maintain clearances from heat sensitive equipment and workstations.
- Maintain clearances from vehicles parked below the heater.
- Maintain clearances from swinging and overhead doors, overhead cranes, vehicle lifts, partitions, storage racks, hoists, building construction, etc.

⚠ WARNING

Fire Hazard

Keep all flammable objects, liquids and vapors the minimum required clearances to combustibles away from heater.

Some objects will catch fire or explode when placed close to heater.

Failure to follow these instructions can result in death, injury or property damage.

- In locations used for the storage of combustible materials, signs must be posted to specify the maximum permissible stacking height to maintain required clearances from the heater to the combustibles. Signs must be posted adjacent to the heater thermostat. In the absence of a thermostat, signs must be posted in a conspicuous location.
- Consult local Fire Marshal, Fire Insurance Carrier or other authorities for approval of proposed installation when there is a possibility of exposure to combustible airborne materials or vapors.
- Hang heater in accordance to the minimum suspension requirements *on Page 16, Figure 15*.
- If the radiant tubes must pass through the building structure, be sure that adequate sleeving and fire stop is installed to prevent scorching and/or fire hazard.

NOTE: 1. All dimensions are from the surfaces of all tubes, couplings and elbows.
2. Clearances B, C and D can be reduced by 50% after 25' (7.5 m) of tubing downstream from where the burner and burner tube connect.

FIGURE 3: LEVEL REFLECTOR

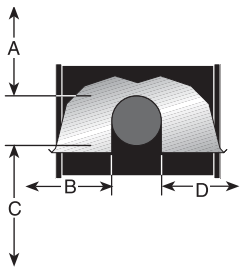

Model	(inches) A	B	C	D	(centimeters) A	B	C	D
HEV-40	6	27	53	27	16	69	135	69
HEV-60	6	35	63	35	16	89	161	89
HEV-80	6	38	66	38	16	97	168	97
HEV-100	6	40	71	40	16	102	181	102
HEV-125	6	46	77	46	16	117	196	117
HEV-150	6	50	80	50	16	127	204	127
HEV-175	8	52	82	52	21	133	209	133

NOTE: 1. All dimensions are from the surfaces of all tubes, couplings and elbows.
2. Clearances B, C and D can be reduced by 50% after 25' (7.5 m) of tubing downstream from where the burner and burner tube connect.

FIGURE 4: LEVEL SIDE REFLECTOR

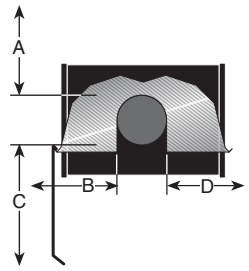

Model	(inches) A	B	C	D	(centimeters) A	B	C	D
HEV-40	6	9	53	44	16	23	135	112
HEV-60	6	9	63	47	16	23	161	120
HEV-80	6	9	70	54	16	23	178	138
HEV-100	6	9	77	59	16	23	196	150
HEV-125	6	9	83	65	16	23	211	166
HEV-150	6	9	86	69	16	23	219	176
HEV-175	8	9	88	73	21	23	224	186

FIGURE 5: TWO SIDE REFLECTORS

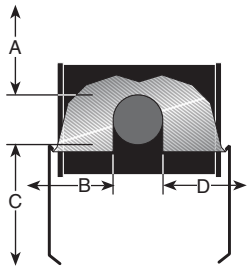

Model	(inches) A	B	C	D	(centimeters) A	B	C	D
HEV-40	6	15	53	15	16	39	135	39
HEV-60	6	23	66	23	16	59	168	59
HEV-80	6	25	72	25	16	64	183	64
HEV-100	6	27	78	27	16	69	199	69
HEV-125	6	32	84	32	16	82	214	82
HEV-150	6	35	88	35	16	89	224	89
HEV-175	8	40	91	40	21	102	232	102

FIGURE 6: 45° TILT REFLECTOR

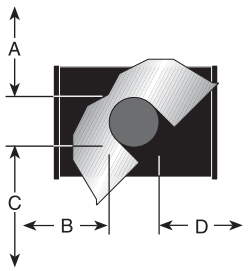

Model	(inches) A	B	C	D	(centimeters) A	B	C	D
HEV-40	8	8	51	46	21	21	130	117
HEV-60	8	8	60	54	21	21	153	138
HEV-80	8	8	66	60	21	21	168	153
HEV-100	10	8	74	64	26	21	188	163
HEV-125	10	8	78	69	26	21	199	176
HEV-150	12	8	84	74	31	21	214	188
HEV-175	12	8	85	79	31	21	216	201

NOTE: 1. All dimensions are from the surfaces of all tubes, couplings and elbows.
2. Clearances B, C and D can be reduced by 50% after 25' (7.5 m) of tubing downstream from where the burner and burner tube connect.

FIGURE 7: U-TUBE, LEVEL REFLECTOR

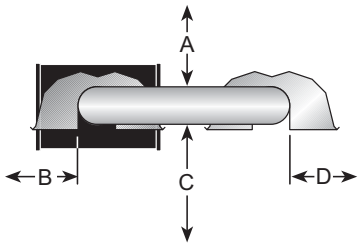

Model	(inches) A	B	C	D	(centimeters) A	B	C	D
HEV-40	- UNAPPROVED -				- UNAPPROVED -			
HEV-60	6	35	63	30	16	89	161	77
HEV-80	6	38	69	37	16	97	176	94
HEV-100	6	40	76	39	16	102	194	100
HEV-125	6	46	79	43	16	117	201	110
HEV-150	6	50	84	47	16	127	214	120
HEV-175	8	54	87	51	21	138	221	130

FIGURE 8: U-TUBE, 45°

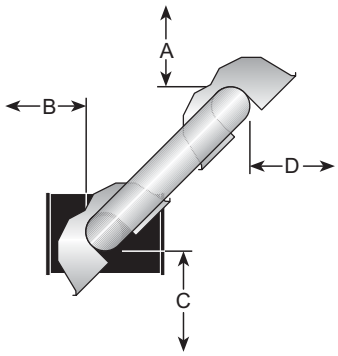

Model	(inches) A	B	C	D	(centimeters) A	B	C	D
HEV-40	- UNAPPROVED -				- UNAPPROVED -			
HEV-60	8	8	60	42	21	21	153	107
HEV-80	8	8	66	46	21	21	168	117
HEV-100	8	8	74	52	21	21	188	133
HEV-125	8	8	78	61	21	21	199	155
HEV-150	8	8	84	66	21	21	214	168
HEV-175	8	8	85	70	21	21	216	178

FIGURE 9: U-TUBE, OPPOSITE 45° REFLECTOR

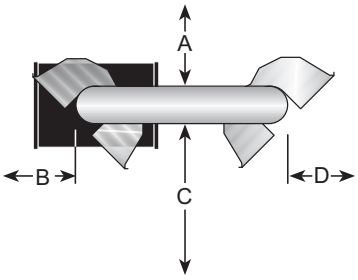

Model	(inches) A	B	C	D	(centimeters) A	B	C	D
HEV-40	- UNAPPROVED -				- UNAPPROVED -			
HEV-60	8	54	60	22	21	138	153	56
HEV-80	8	60	66	22	21	153	168	56
HEV-100	10	64	74	22	26	163	188	56
HEV-125	10	70	78	22	26	178	199	56
HEV-150	12	74	84	22	31	188	214	56
HEV-175	12	76	85	22	31	194	216	56

NOTE: 1. All dimensions are from the surfaces of all tubes, couplings and elbows.
2. Clearances B, C and D can be reduced by 50% after 25' (7.5 m) of tubing downstream from where the burner and burner tube connect.

FIGURE 10: 2-FOOT DECO GRILLE AND PROTECTIVE GRILLE

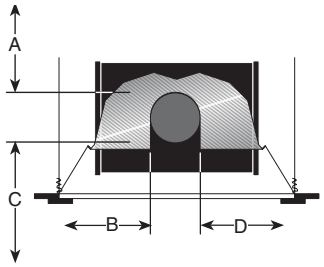

Model	(inches) A	B	C	D	(centimeters) A	B	C	D
HEV-40	6	27	53	27	16	69	135	69
HEV-60	6	35	63	35	16	89	161	89
HEV-80	6	38	66	38	16	97	168	97
HEV-100	6	40	71	40	16	102	181	102
HEV-125	6	46	77	46	16	117	196	117
HEV-150	6	50	80	50	16	127	204	127
HEV-175	8	52	82	52	21	133	209	133

FIGURE 11: LOWER CLEARANCE SHIELD*

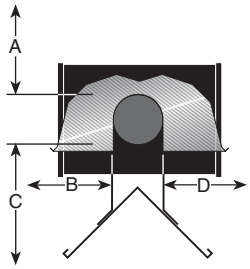

Model	(inches) A	B	C	D	(centimeters) A	B	C	D
HEV-40	6	34	27	34	16	87	69	87
HEV-60	6	39	33	39	16	100	84	100
HEV-80	6	40	38	40	16	102	97	102
HEV-100	6	50	44	50	16	127	112	127
HEV-125	6	54	48	54	16	138	122	138
HEV-150	6	55	50	55	16	140	127	140
HEV-175	- UNAPPROVED -				- UNAPPROVED -			

*When installed in the first 10' (3 m).

FIGURE 12: VENTING

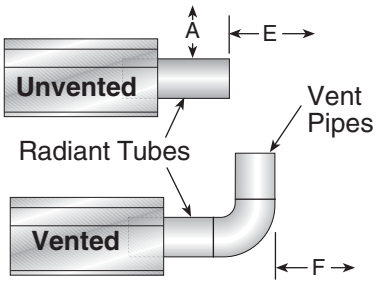

Model	(inches) A	E	F	(centimeters) A	E	F
HEV-40	14	18	18	36	46	46
HEV-60	14	18	18	36	46	46
HEV-80	20	24	18	51	61	46
HEV-100	20	24	18	51	61	46
HEV-125	20	24	18	51	61	46
HEV-150	20	30	18	51	77	46
HEV-175	20	30	18	51	77	46

SECTION 4: NATIONAL STANDARDS AND APPLICABLE CODES

4.1 Gas Codes

The type of gas appearing on the nameplate must be the type of gas used. Installation must comply with national and local codes and requirements of the local gas company.

United States: Refer to National Fuel Gas Code NFPA 54/ANSI Z223.1 - latest revision.

Canada: Refer to Natural Gas and Propane Installation Code CSA B149.1 - latest revision.

4.2 Aircraft Hangars

Installation in aircraft hangars must be in accordance with the following codes:

United States: Refer to Standard for Aircraft Hangars, NFPA 409 - latest revision.

Canada: Refer to Natural Gas and Propane Installation Code CSA B149.1 - latest revision.

In aircraft storage and servicing areas, heaters shall be installed at least 10' (3 m) above the upper surface of wings or of engine enclosures of the highest aircraft which may be housed in the hangar. The measurement shall be made from the wing or engine enclosure (whichever is higher from the floor) to the bottom of the heater.

• In shops, offices and other sections of aircraft hangars communicating with aircraft storage or servicing areas, heaters shall be installed not less than 8' (2.4 m) above the floor.

• Suspended or elevated heaters shall be so located in all spaces of aircraft hangars that they shall not be subject to injury by aircraft, cranes, movable scaffolding or other objects. Provisions shall be made to assure accessibility to suspended heaters for recurrent maintenance purposes.

4.3 Public Garages

Installation in garages must be in accordance with the following codes:

United States: Refer to Standard for Parking Structures NFPA 88A - latest revision or the Code for Motor Fuel Dispensing Facilities and Repair Garages, NFPA 30A - latest revision.
Canada: Refer to Natural Gas and Propane Installation Code CSA B149.1 - latest revision.

• Heaters must not be installed less than 8' (2.4 m) above the floor. Minimum clearances to combustibles must be maintained from vehicles parked below the heater.

• When installed over hoists, minimum clearances to combustibles must be maintained from the upper most point of objects on the hoist.

4.4 Electrical

The heater must be electrically grounded in accordance with the following codes:

United States: Refer to National Electrical Code®, NFPA 70 - latest revision. Wiring must conform to the most current National Electrical Code®, local ordinances and any special diagrams furnished.

Canada: Refer to Canadian Electrical Code, CSA C22.1 Part 1 - latest revision.

4.5 Venting

The venting must be installed in accordance with the requirements within this manual and the following codes:

United States: Refer to National Fuel Gas Code NFPA 54/ANSI Z223.1 - latest revision.

Canada: Refer to Natural Gas and Propane Installation Code CSA B149.1 - latest revision.

4.6 High Altitude

These heaters are approved for installations up to 2000' (610 m)(US), 4500' (1370 m)(Canada) without modification. Consult factory if US installation is above 2000' (610 m) or Canadian installation is above 4500' (1370 m).

SECTION 5: MAJOR COMPONENTS

FIGURE 13: Major Component Descriptions - Standard Reflector

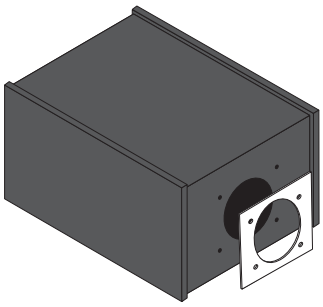

Burner with Tube Gasket
Must be installed with the flame observation window facing down.

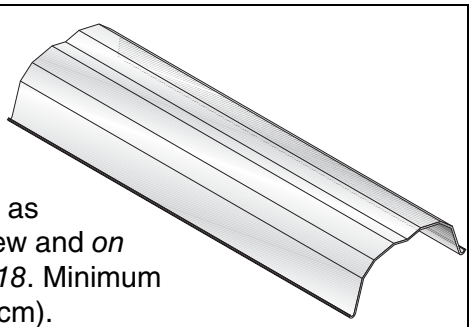

Standard Reflector (Aluminum or Stainless Steel)
Alternate overlap as shown on overview and *on Page 19, Figure 18*. Minimum overlap is 6" (16 cm).

Burner Tube
Supplied in 10' (3 m) lengths. Burner tube is always the first tube after the burner.

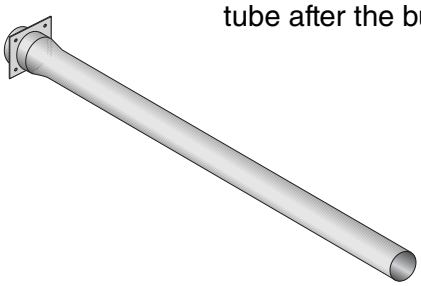

Combustion Air Weather Vent
Attach at flue end and air inlet where required.

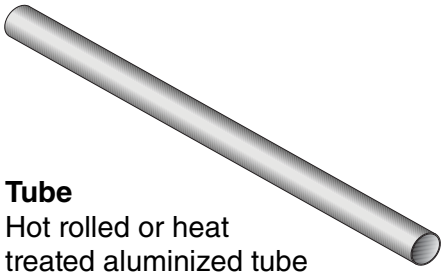

Tube
Hot rolled or heat treated aluminized tube supplied in 10' (3 m) lengths.

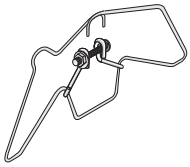

Tube and Reflector Hanger with Clamp Package
Position this hanger no more than 4" (10 cm) away from the burner.

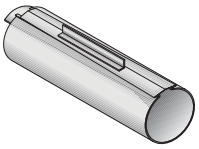

Coupling Assembly with Lock

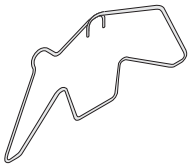

Tube and Reflector Hanger
Suspend system from these hangers.

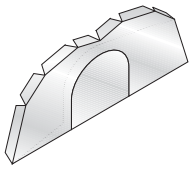

Reflector End Cap
Punch out center section to accommodate tube.

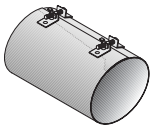

Vent Adapter

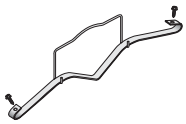

Reflector Support Strap & Wire Form

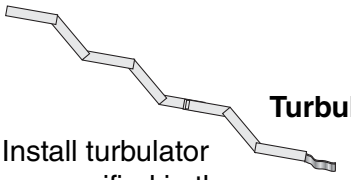

Turbulator
Install turbulator as specified in the "Turbulator Installation" chart. *See Page 23, Step 6.5*. Turbulator is not required on the HEV-125/150/175.

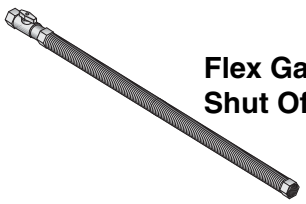

Flex Gas Line with Shut Off Cock

FIGURE 14: Major Component Descriptions - High Efficiency Reflector

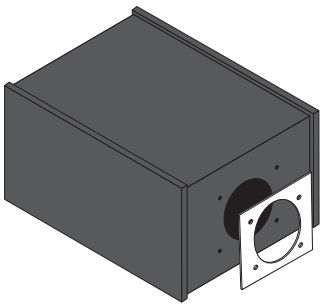

Burner with Tube Gasket
Must be installed with the flame observation window facing down.

High Efficiency Reflector (Aluminum)
Alternate overlap as shown on overview and *on Page 19, Figure 18*.
Minimum overlap is 6" (16 cm).

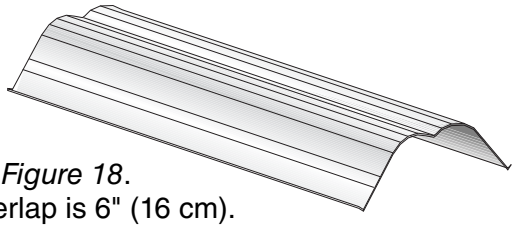

Burner Tube
Supplied in 10' (3 m) lengths. Burner tube is always the first tube after the burner.

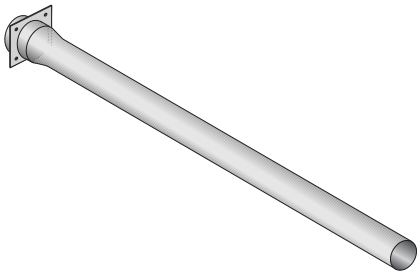

Combustion Air Weather Vent
Attach at flue end and air inlet where required.

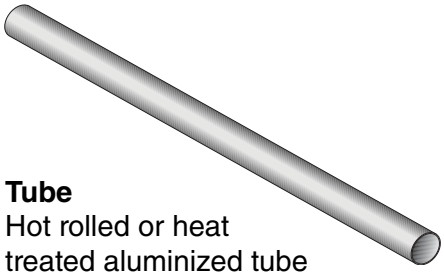

Tube
Hot rolled or heat treated aluminized tube supplied in 10' (3 m) lengths.

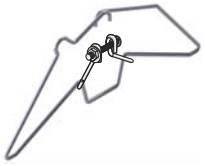

Tube and Reflector Hanger with Clamp Package-EF
Position this hanger no more than 4" (10 cm) away from the burner.

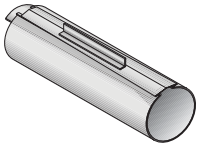

Coupling Assembly with Lock

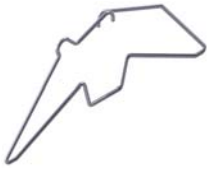

Tube and Reflector Hanger-EF
Suspend system from these hangers.

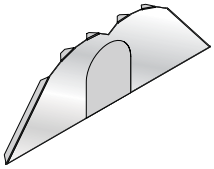

Reflector End Cap-EF
Punch out center section to accommodate tube.

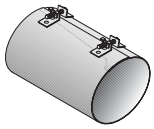

Vent Adapter

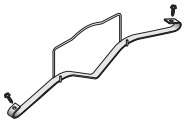

Reflector Support Strap & Wire Form

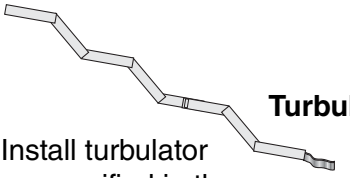

Turbulator
Install turbulator as specified in the "Turbulator Installation" chart. *See Page 23, Step 6.5*.
Turbulator is not required on the HEV-125/150/175.

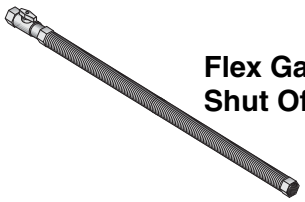

Flex Gas Line with Shut Off Cock

5.1 Standard Parts List

Table 1: Contents of the Burner Carton

Part No.	Description	HEV-40	HEV-60	HEV-80	HEV-100	HEV-125	HEV-150	HEV-175
038XXXXX	Burner Assembly (Rate and Fuel Varies)	1	1	1	1	1	1	1
02568200	Gasket (Burner to Burner Tube)	1	1	1	1	1	1	1
138100NA	Installation, Operation and Service Manual	1	1	1	1	1	1	1
03700009	Combustion Air Weather Vent	1	1	1	1	1	1	1
94273914	Hex Head Bolts 5/16" - 18 Rolok	4	4	4	4	4	4	4
96411600	Split Lock washer	4	4	4	4	4	4	4
91221100	Pipe Nipple (Galvanized) 1/2” NPT x 4”	1	1	1	1	1	1	1
91309701	Grommet - Liquid Tight	1	1	1	1	1	1	1
*91412203	Flexible Stainless Steel Gas Hose - 3/4" NPT (US Models Only)	1	1	1	1	1	1	1
03051501	Turbulator Adapter	1	1	1	1	-	-	-
03051502	Turbulator Aluminized Steel	2	4	4	2	-	-	-
03051505	Turbulator Stainless Steel	1	-	-	-	-	-	-

*Canadian Models: Rubber (Type 1) Gas Hoses available as an accessory. *See Page 46, Section 9.*

Table 2: Contents of Standard Core and Extension Packages

		Core Packages								Extension Packages							
		Aluminized with Aluminum Reflector				Aluminized with Stainless Steel Reflector				Aluminized with Aluminum Reflector				Aluminized with Stainless Steel Reflector			
Part No.	Description	10' (3 m)	20' (6 m)	30' (9 m)	40' (12 m)	10' (3 m)	20' (6 m)	30' (9 m)	40' (12 m)	10' (3 m)	20' (6 m)	30' (9 m)	40' (1 2m)	10' (3 m)	20' (6 m)	30' (9 m)	40' (12 m)
91409408	Tube, HT Aluminized, 10' (3 m)	-	1	2	3	-	1	2	3	1	2	3	4	1	2	3	4
03051101	Burner Tube, ALUMI-THERM® Steel, 10' (3 m)	-	-	1	1	-	-	-	-	-	-	-	-	-	-	-	-
03051102	Burner Tube, ALUMI-THERM® Steel, 10' (3 m)	-	-	-	-	-	-	1	1	-	-	-	-	-	-	-	-
03051601	Burner Tube, HT ALUMI-THERM® Steel, 10' (3 m)	1	1	-	-	-	-	-	-	-	-	-	-	-	-	-	-
03051602	Burner Tube, HT ALUMI-THERM® Steel - HE, 10' (3m)	-	-	-	-	1	1	-	-	-	-	-	-	-	-	-	-
01312700	Coupling Assembly	-	1	2	3	-	1	2	3	1	2	3	4	1	2	3	4
02750303	Standard Reflector, 8' (3.5 m)	2	3	4	6	-	-	-	-	2	3	4	6	-	-	-	-
027503SS*	Stainless Steel Reflector, 8' (3.5 m)	-	-	-	-	2	3	4	6	-	-	-	-	2	3	4	6
02750800	End Cap	2	2	2	2	-	-	-	-	-	-	-	-	-	-	-	-
027508SH*	Stainless Steel End Cap with Hole	-	-	-	-	2	2	2	2	-	-	-	-	-	-	-	-
03090100	Tube and Reflector Hanger	2	3	4	5	2	3	4	5	1	2	3	4	1	2	3	4
91907302	S-Hook	2	3	4	5	2	3	4	5	1	2	3	4	1	2	3	4
03050010	Reflector Support Package (Strap, Wire Form, Screws)	1	2	3	5	2	4	5	7	2	3	4	6	2	3	4	6
91107720	U-Clip Package	1	1	1	1	1	1	1	1	1	1	1	1	1	1	1	1
90502700	Vent Adapter	1	1	1	1	1	1	1	1	-	-	-	-	-	-	-	-
01318901	Tube Clamp Package	1	1	1	1	2	2	2	2	-	-	-	-	-	-	-	-
	Part Number	CP10ALUM	CP20ALUM	CP30ALUM	CP40ALUM	CP10ALUMSS	CP20ALUMSS	CP30ALUMSS	CP40ALUMSS	EXP10ALUM	EXP20ALUM	EXP30ALUM	EXP40ALUM	EXP10ALUMSS	EXP20ALUMSS	EXP30ALUMSS	EXP40ALUMSS

* Optional with the aluminized core package.

Table 3: Contents of High Efficiency Core and Extension Packages

		Core Packages				Extension Packages			
		Aluminized				Aluminized			
Part No.	Description	10' (3m)	20' (6m)	30' (9m)	40' (12m)	10' (3m)	20' (6m)	30' (9m)	40' (12m)
91409300	Tube, Hot Rolled Steel, 10' (3 m)	-	-	-	-	-	-	-	-
91409408	Tube, HT Aluminized, 10' (3 m)	-	1	2	3	1	2	3	4
03051101	Burner Tube, ALUMI-THERM® Steel, 10' (3 m)	-	-	1	1	-	-	-	-
03051601	Burner Tube, HT ALUMI-THERM® Steel, 10' (3 m)	1	1	-	-	-	-	-	-
01312700	Coupling Assembly	-	1	2	3	1	2	3	4
02750313	High Efficiency Reflector, 8' (3.5 m)	2	3	4	6	2	3	4	6
02750802	End Cap, High Efficiency	2	2	2	2	-	-	-	-
03090102	Tube and Reflector Hanger, High Efficiency	2	3	4	5	1	2	3	4
91907302	S-Hook	2	3	4	5	1	2	3	4
03050012	Reflector Support Package (Strap, Wire Form, Screws)	1	2	3	5	2	3	4	6
91107720	U-Clip Package	1	1	1	1	1	1	1	1
90502701	Vent Adapter	1	1	1	1	-	-	-	-
01318902	Tube Clamp Package - EF	1	1	1	1	-	-	-	-
	Part Number	CP10ALUMEF	CP20ALUMEF	CP30ALUMEF	CP40ALUMEF	EXP10ALUMEF	EXP20ALUMEF	EXP30ALUMEF	EXP40ALUMEF

NOTE: High efficiency core and extension packages are available with aluminum reflectors only. High efficiency reflectors should NOT be used in applications exposed to wind.

Table 4: Component Package Guide

Model	Tubing Length	Standard Core Packages	
	Minimum	Aluminized	Stainless Steel
HEV-40	10’ (3m)	CP10ALUM	CP10ALUMSS
HEV-60	20’ (6m)	CP20ALUM	CP20ALUMSS
HEV-80	20’ (6m)	CP20ALUM	CP20ALUMSS
HEV-100	30’ (9m)	CP30ALUM	CP30ALUMSS
HEV-125	40’ (12m)	CP40ALUM	CP40ALUMSS
HEV-150	50’ (15m)	CP30ALUM + EXP20ALUM	CP30ALUMSS+ EXP20ALUMSS
HEV-175	60’ (18m)	CP30ALUM + EXP30ALUM	CP30ALUMSS + EXP30ALUMSS

Table 5: Component Package Guide

Model	Tubing Length	High Efficiency Core Packages
	Minimum	Aluminized
HEV-40	10’ (3m)	CP10ALUMEF
HEV-60	20’ (6m)	CP20ALUMEF
HEV-80	20’ (6m)	CP20ALUMEF
HEV-100	30’ (9m)	CP30ALUMEF
HEV-125	40’ (12m)	CP40ALUMEF
HEV-150	50’ (15m)	CP30ALUMEF + EXP20ALUMEF
HEV-175	60’ (18m)	CP30ALUMEF + EXP30ALUMEF

Although not recommended, additional tube lengths may be added to the heater. Tubing must be aluminized (heat-treated), or porcelain coated. Additional tube lengths beyond the specified minimum tubing length are considered vent pipe for length determination. Maximum vent length allowed is 45' (13.7 m) total.

SECTION 6: HEATER INSTALLATION

⚠ WARNING

Severe Injury Hazard

Secure burner to burner tube with nuts and lockwashers.

Hang heater with materials with a minimum working load of 75 lbs (33 kg).

Failure to follow these instructions can result in death, injury or property damage.

⚠ WARNING

Cut/Pinch Hazard

Wear protective gear during installation, operation and service.

Edges are sharp.

Failure to follow these instructions can result in injury.

To ensure your safety, and comply with the terms of the warranty, all units must be installed in accordance with these instructions.

The gas or the electrical supply lines must not be used to support the heater.

Do not locate the gas or electric supply lines directly over the path of the flue products from the heater.

The heater must be installed in a location that is readily accessible for servicing.

The heaters must be installed in accordance with clearances to combustibles as indicated on the rating plate and in this instruction manual.

The minimum and maximum gas inlet pressures must be maintained as indicated on the rating plate.

Typical installation configurations are shown in *Figure 15*.

Expansion and contraction of the tube dictates that the minimum suspension lengths in the table *on Page 16, Figure 15* be maintained.

FIGURE 15: Critical Hanger Placement

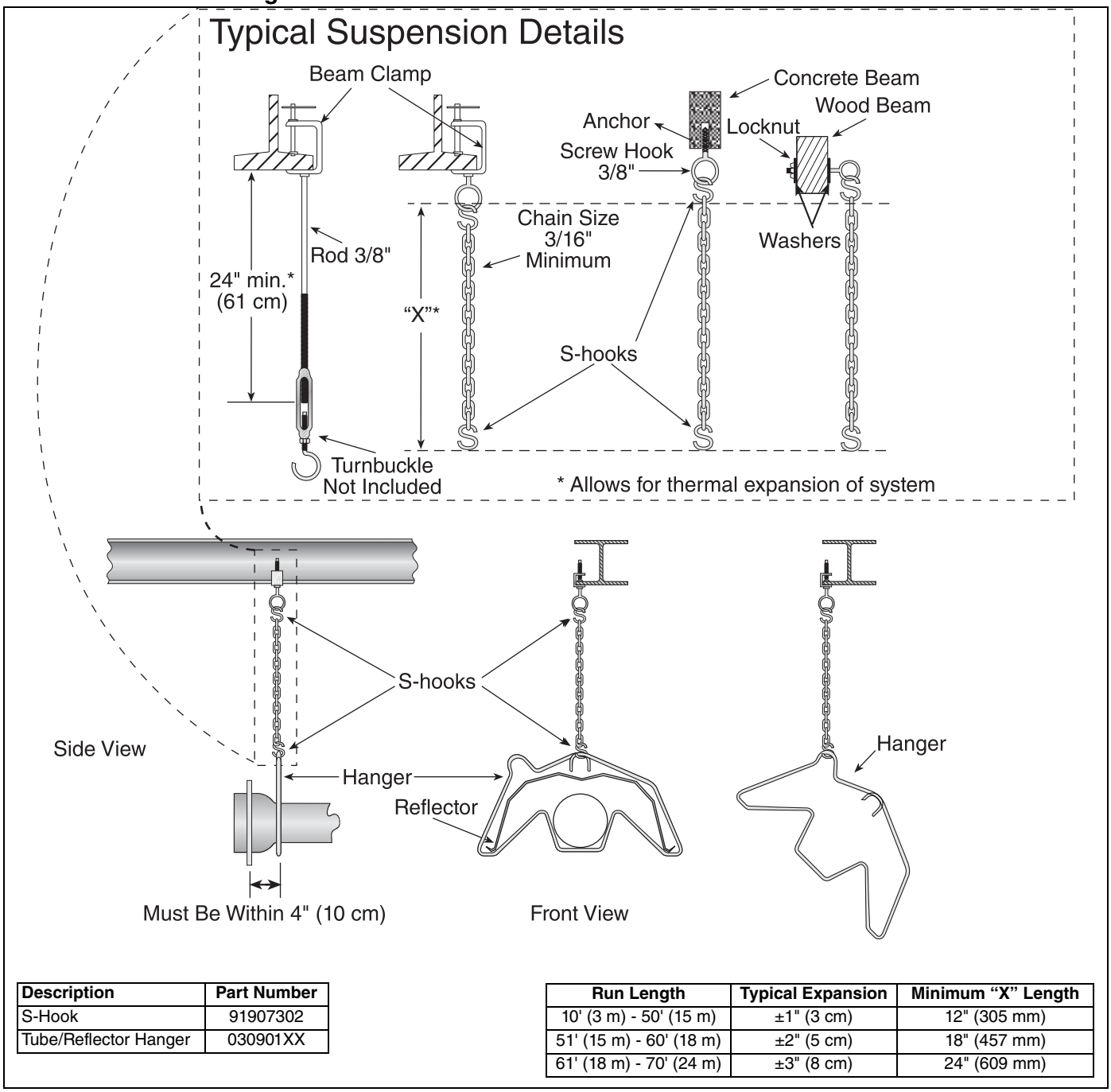

Description	Part Number
S-Hook	91907302
Tube/Reflector Hanger	030901XX

Run Length	Typical Expansion	Minimum "X" Length
10' (3 m) - 50' (15 m)	±1" (3 cm)	12" (305 mm)
51' (15 m) - 60' (18 m)	±2" (5 cm)	18" (457 mm)
61' (18 m) - 70' (24 m)	±3" (8 cm)	24" (609 mm)

6.1 Outdoor Mounting

The heater is meant for stationary mounting in all situations and should not be suspended from any structure which may become mobile or from any organic structures such as trees. Clearances to combustibles must be maintained in all cases; do not install heaters in a location such as a parking area, where a vehicle with a painted or non-metallic upper surface, may be parked within the clearances to combustibles. *See Page 17, Figure 16*.

The bottom of the combustion air inlet shall not be less than 12" (30 cm) above a surface which could support snow, ice, or debris.

FIGURE 16: Critical Hanger Placement (Outdoor Installation)

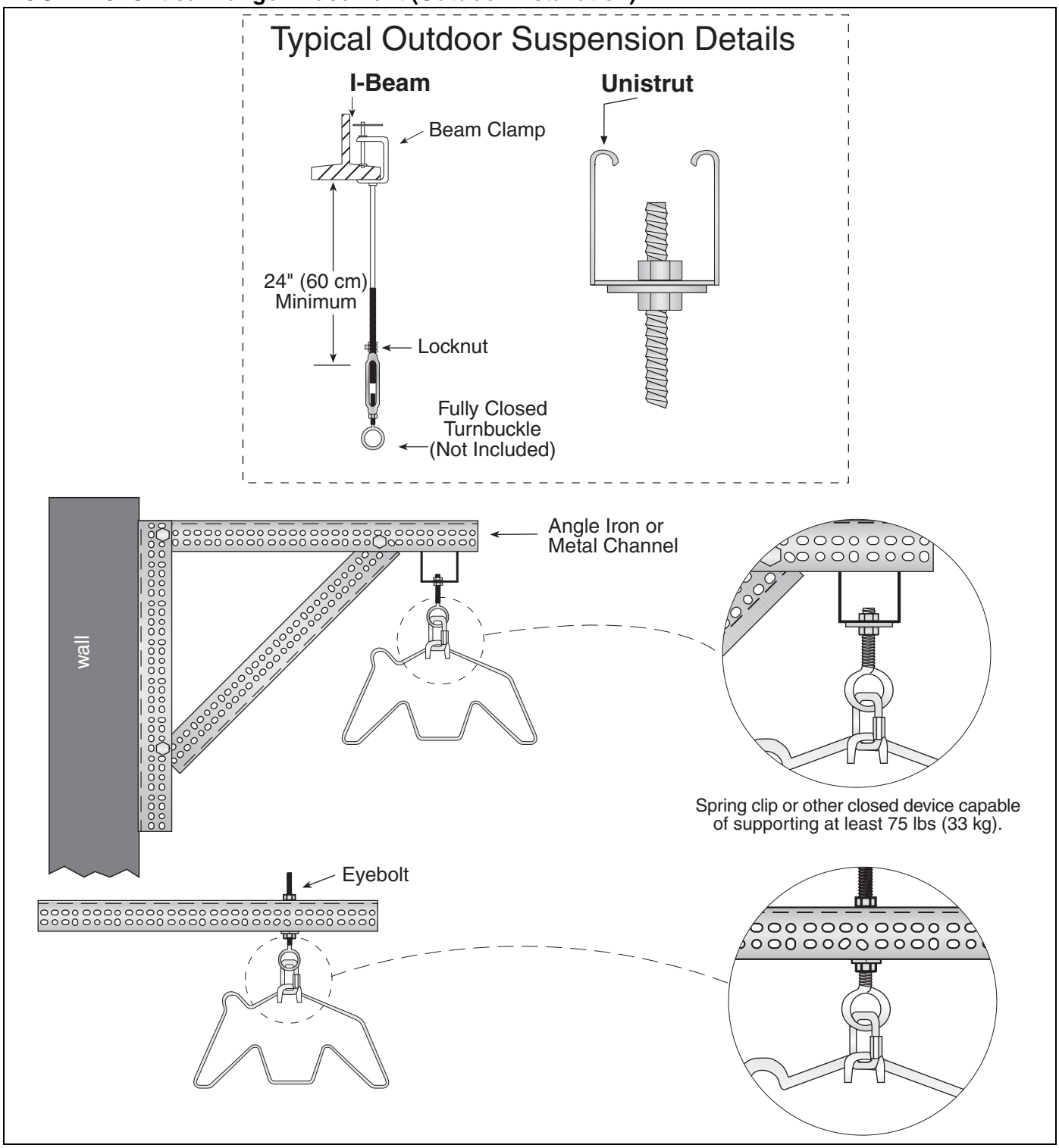

NOTE: High efficiency reflectors should NOT be used in applications exposed to wind.

FIGURE 17: Linear Heater Assembly Overview

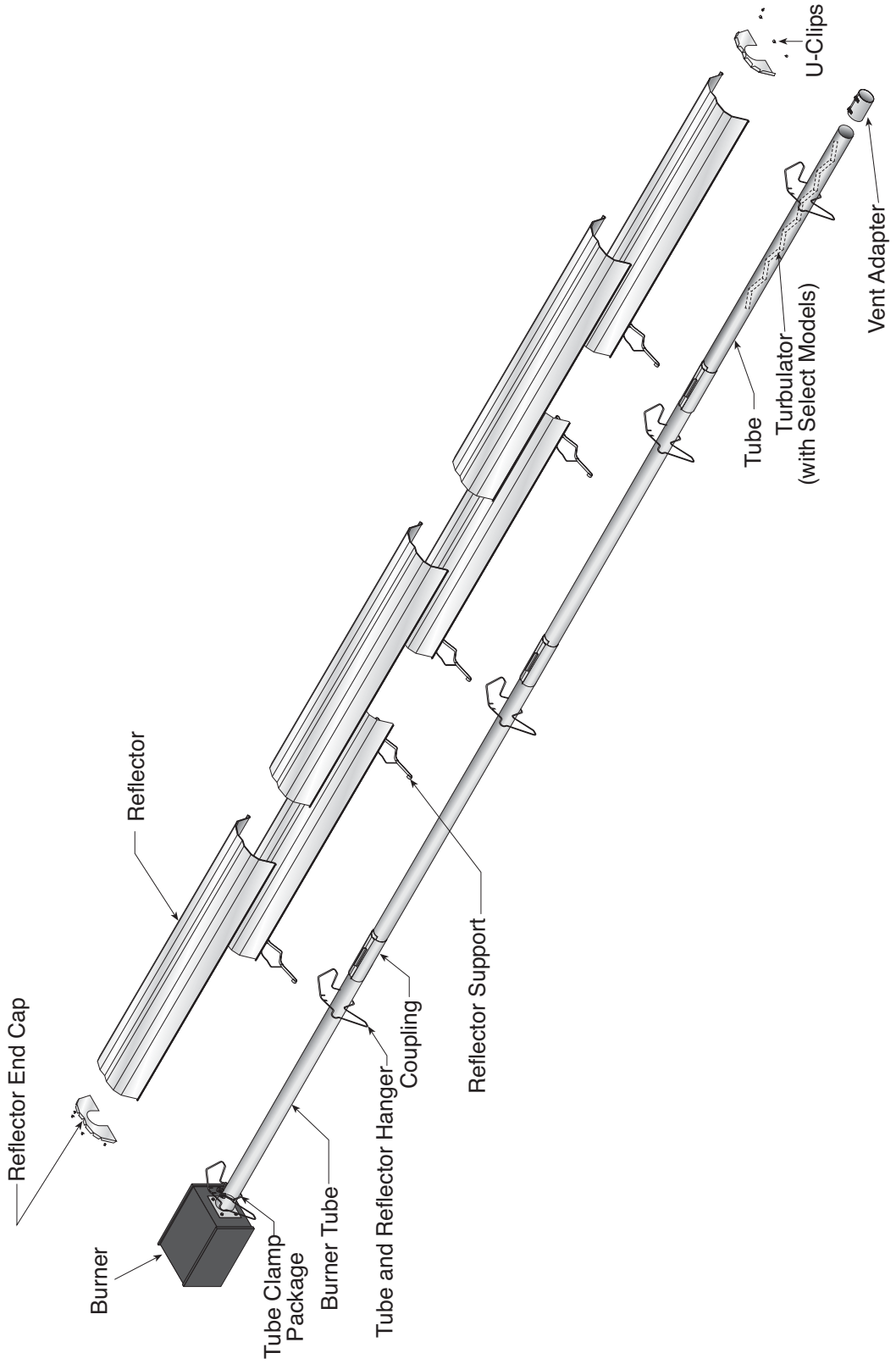

FIGURE 18: Linear Heater Layout Overview

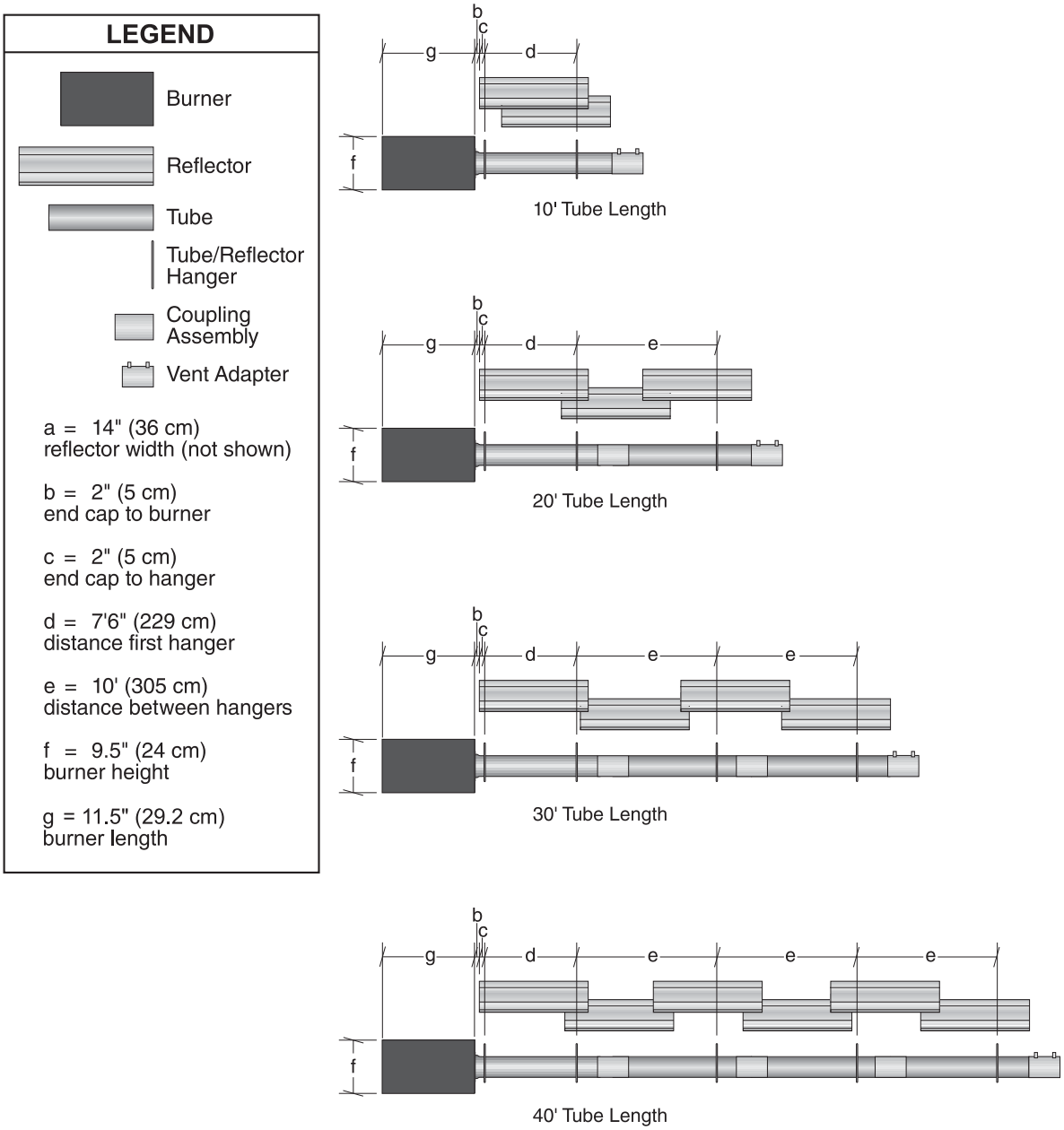

FIGURE 19: Linear Heater Layout Overview (Continued)

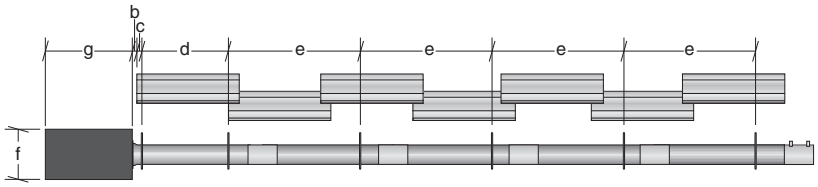

50' Tube Length

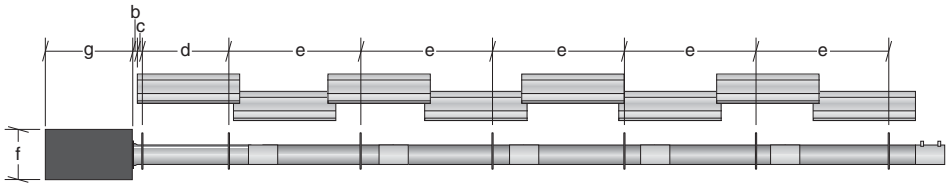

60' Tube Length

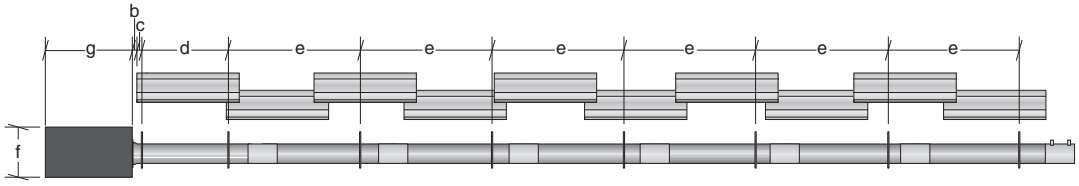

70' Tube Length

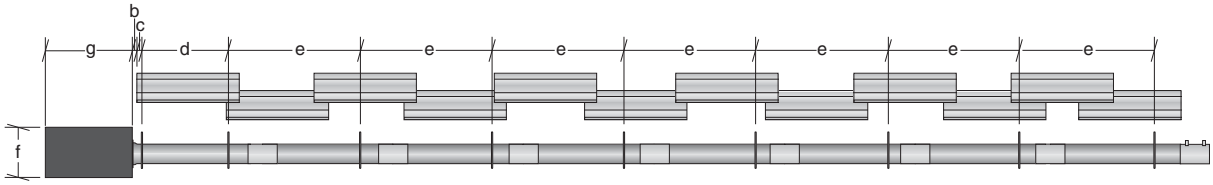

80' Tube Length

Step 6.2 Burner Tube Installation

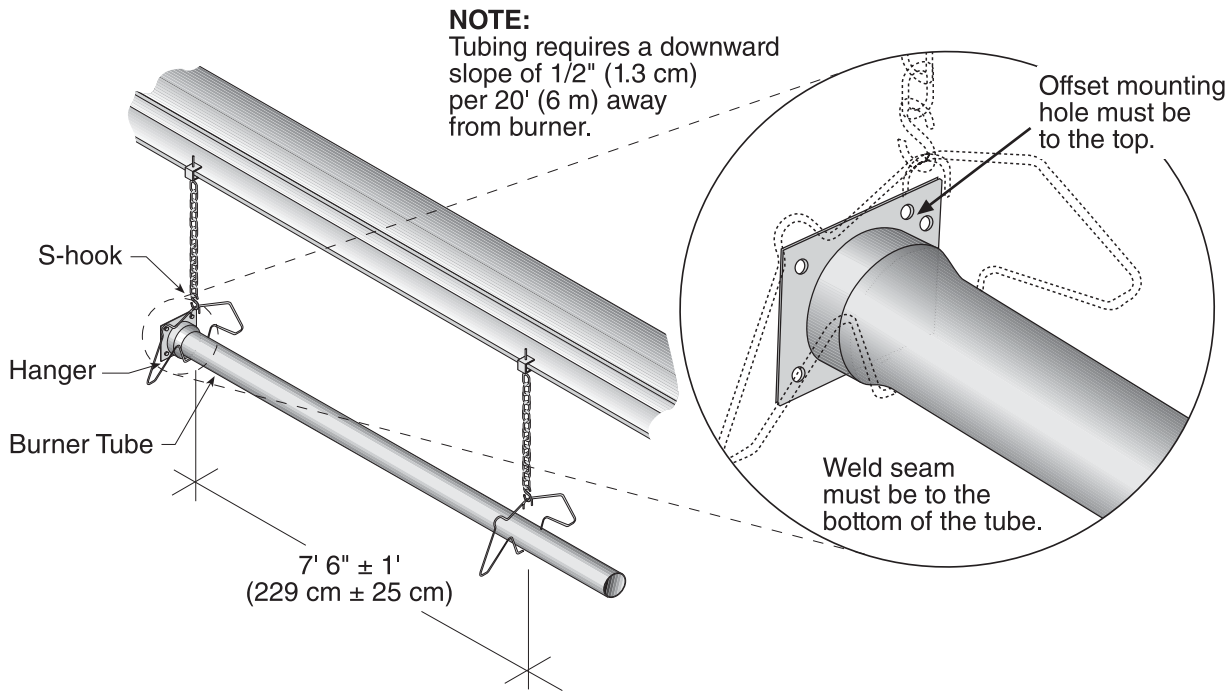

Description	Part Number
Burner Tube	03051XXX
S-Hook	91907302
Tube/Reflector Hanger	030901XX

Step 6.3 Tube Clamp Package Installation

Description	Part Number
Tube Clamp Package	013189XX

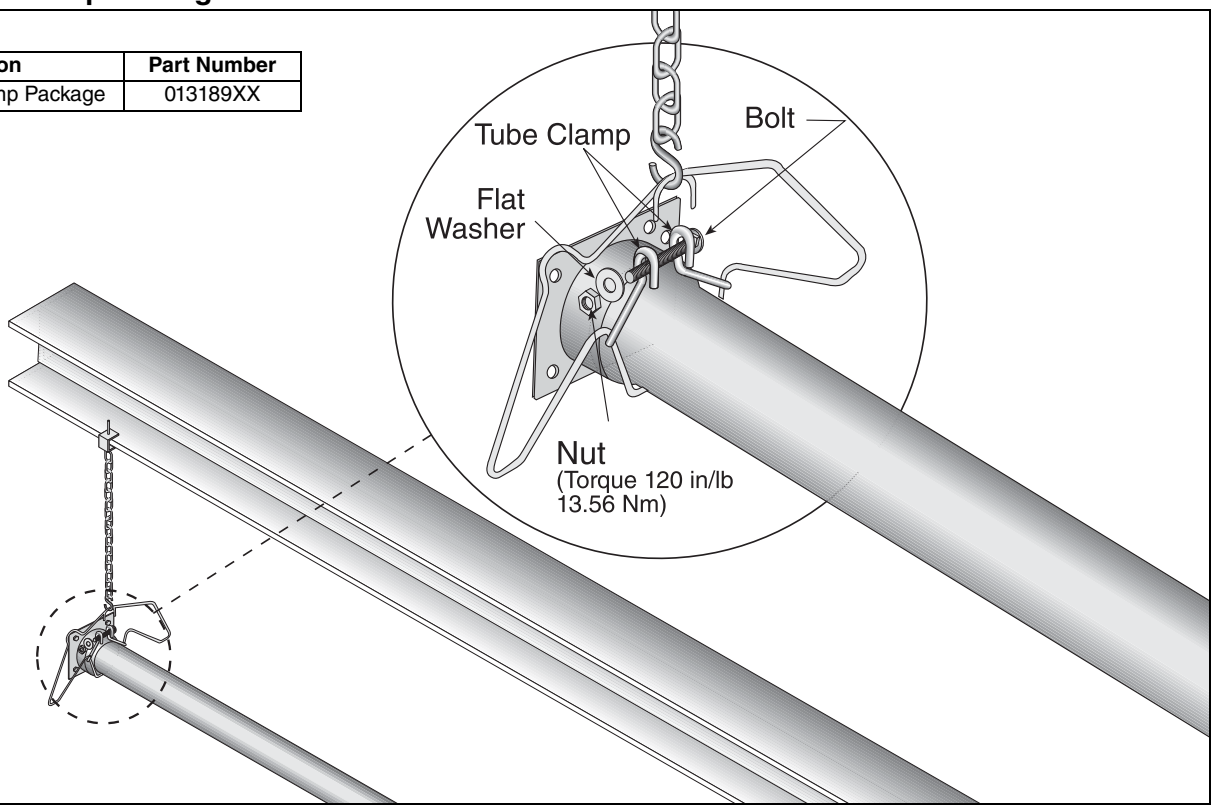

Step 6.4 Coupling and Tube Assembly

A Close coupling and slide opposite end into tab. Position tab underneath guide rail.

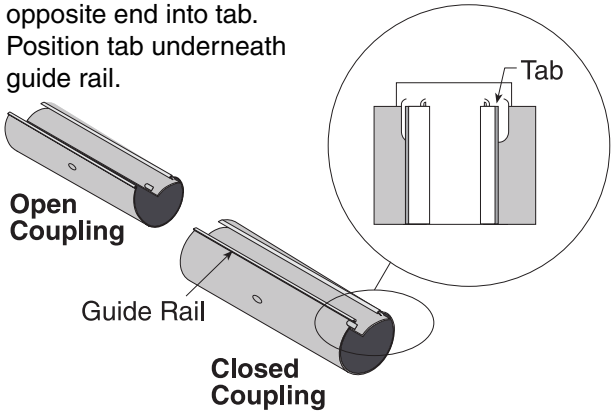

B Insert wide end of slide bar/coupling lock into guide rail on opposite end of tabs. Slide the slide bar/coupling lock up the guide rail until snug (approximately 3" (8 cm) to 4" (10 cm)).

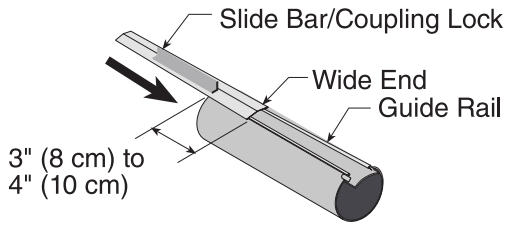

C Insert tubes into coupling until end of each tube rests against internal pins.

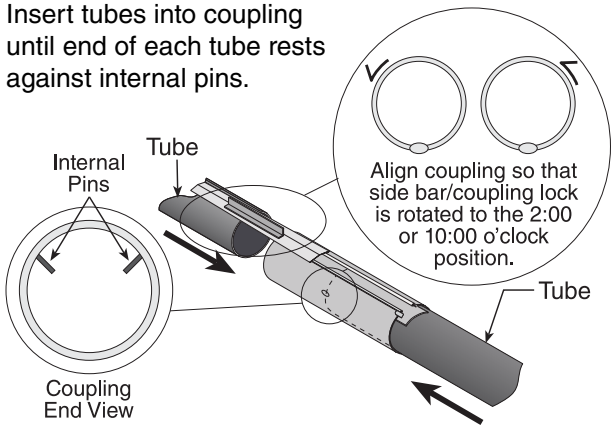

D Strike slide bar/coupling lock with mallet or hammer until tight.

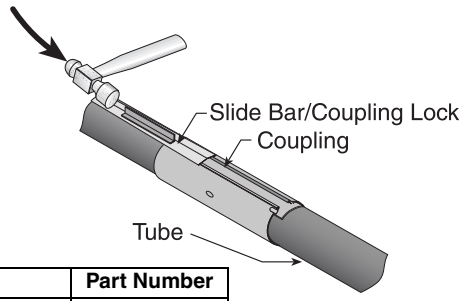

Description	Part Number
Coupling	01329600
Slide Bar/Coupling Lock	01329700
Tube	91409XXX

Step 6.4.1 Coupling and Tube Assembly (Continued)

Tighten slide bar as shown below.

Be sure not to over tighten slide bar/coupling lock. Slide bar/coupling lock should be within tolerange listed below.

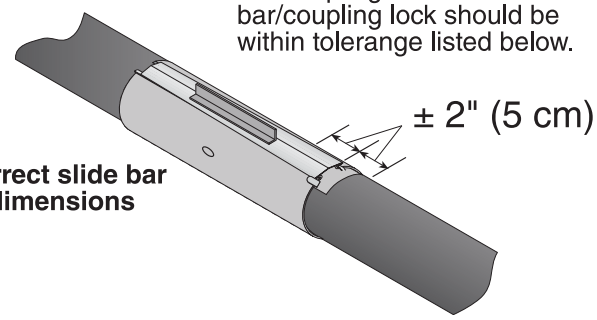

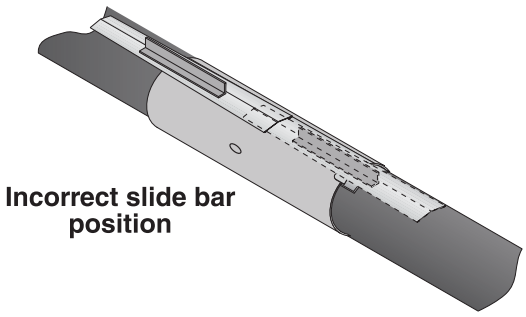

- **Repeat Step 6.4 A - D until all tubes are assembled.** ***See Page 23, Section 6.4.2.***

Step 6.4.2 Coupling and Tube Assembly (Continued)

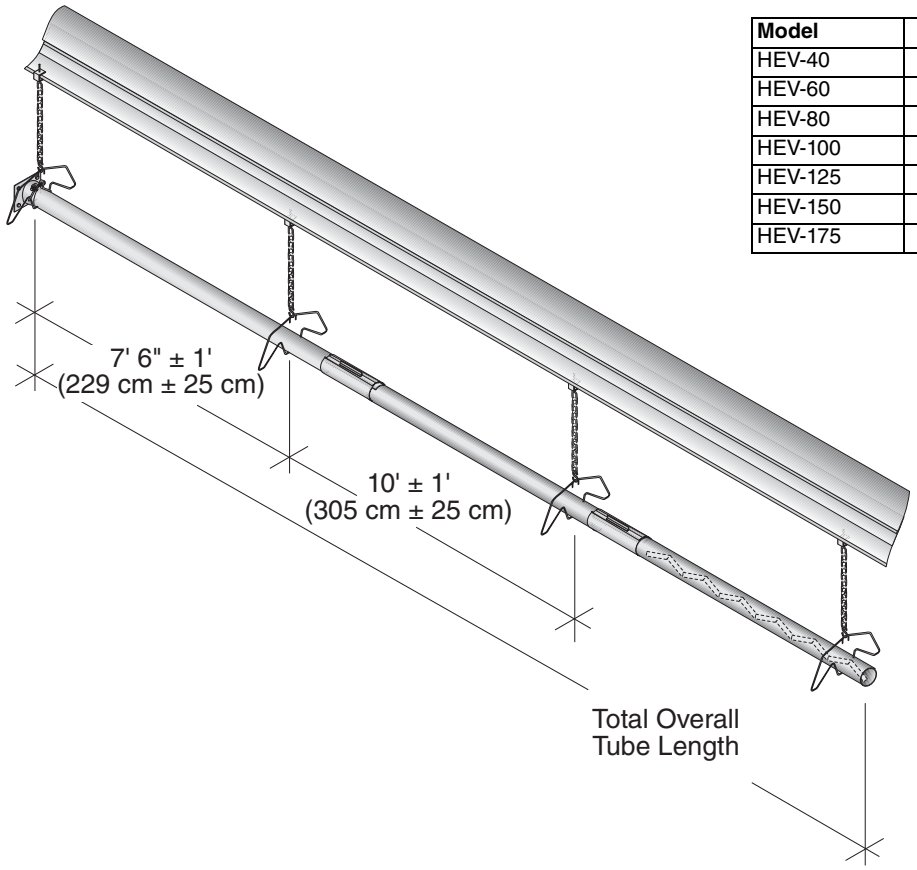

Model	Tube Length Minimum
HEV-40	10' (3 m)
HEV-60	20' (6 m)
HEV-80	20' (6 m)
HEV-100	30' (9 m)
HEV-125	40' 12 m)
HEV-150	50' (15 m)
HEV-175	60' (18 m)

Step 6.5 Turbulator Installation

Install turbulator as specified in the "Turbulator Installation" charge below. Turbulator is not required on the HEV-125, 150, 175.

Turbulator Installation	
Model	**Tube Section**
HEV-40	1st 10' Section
HEV-60	2nd 10' Section
HEV-80	2nd 10' Section
HEV-100	3rd 10' Section
HEV-125	N/A
HEV-150	N/A
HEV-175	N/A

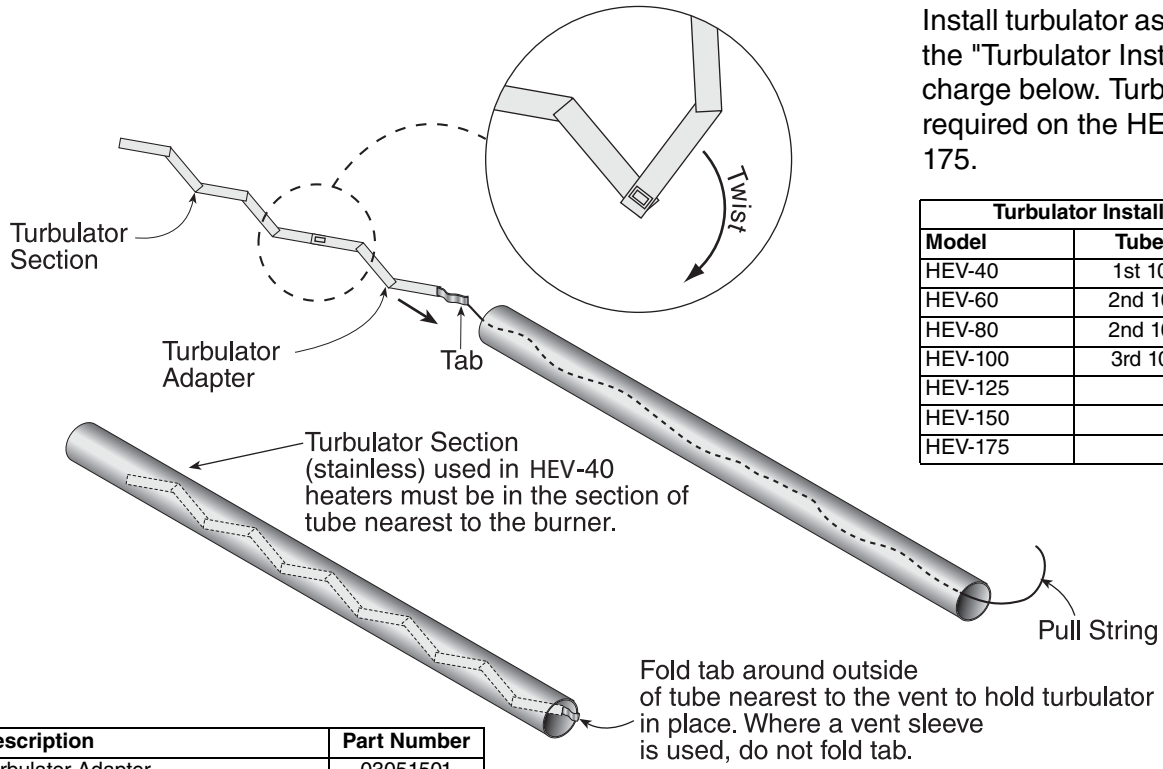

Description	Part Number
Turbulator Adapter	03051501
Turbulator Section	03051502
Turbulator Section (stainless)	03051505
Tube	91409XXX

Step 6.6 Reflector Installation

⚠ WARNING

Fire Hazard

Support reflector with reflector hanger and support strap.

Reflector must not touch tube.

Failure to follow these instructions can result in death, injury or property damage.

NOTE: All tube surfaces must be covered by a reflector, except for a U-Tube.

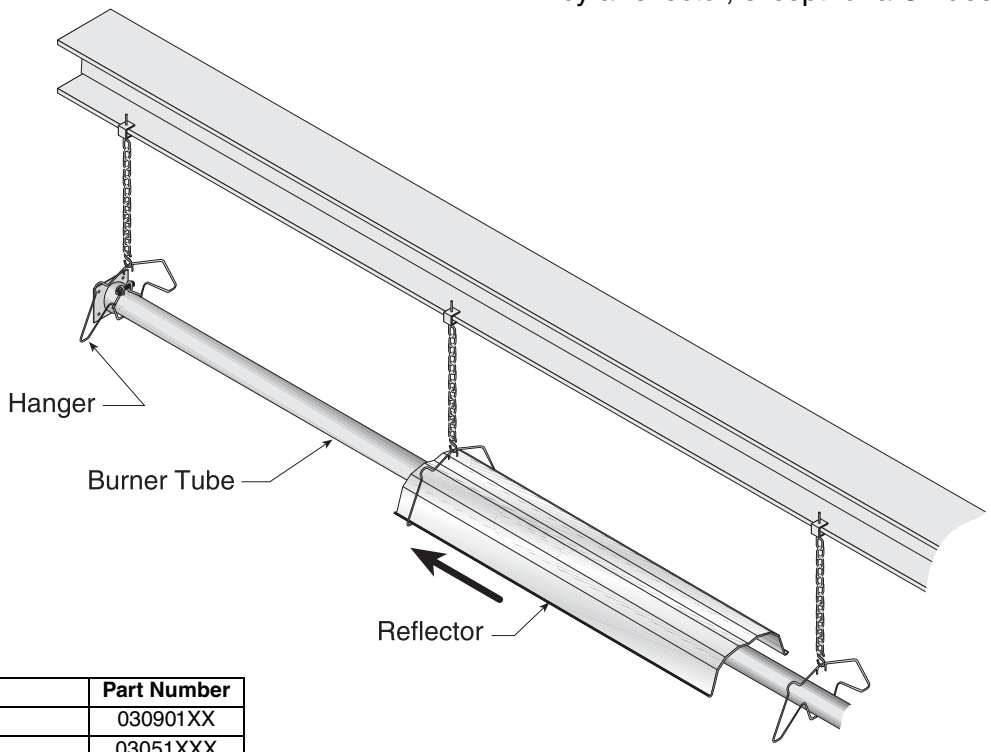

Description	Part Number
Tube/Reflector Hanger	030901XX
Burner Tube	03051XXX
Reflector - 96" (244cm)	027503XX

Step 6.6.1 Reflector, U-Clip and Reflector Support Installation

The pictorial drawings of the heater construction in *Section 6* are schematic only and provide a general guideline of where hangers, reflector supports and U-clips are to be installed.

To ensure proper expansion and contraction movement of the reflectors, a combination of U-clips and reflector supports are used. The positioning of reflector supports and U-clips depends on the individual installation. Use either pop rivets or sheet metal screws instead of u-clips when installing end caps and joint pieces in areas where impact and high wind may be a factor. The following rules must be observed.

1. Slide first reflector after burner a minimum 2” (4 cm) through first hanger and ensure reflector end cap is securely fastened via U-clips, pop rivets, or sheet metal screws. Position reflector support with tight screws in middle of first reflector.

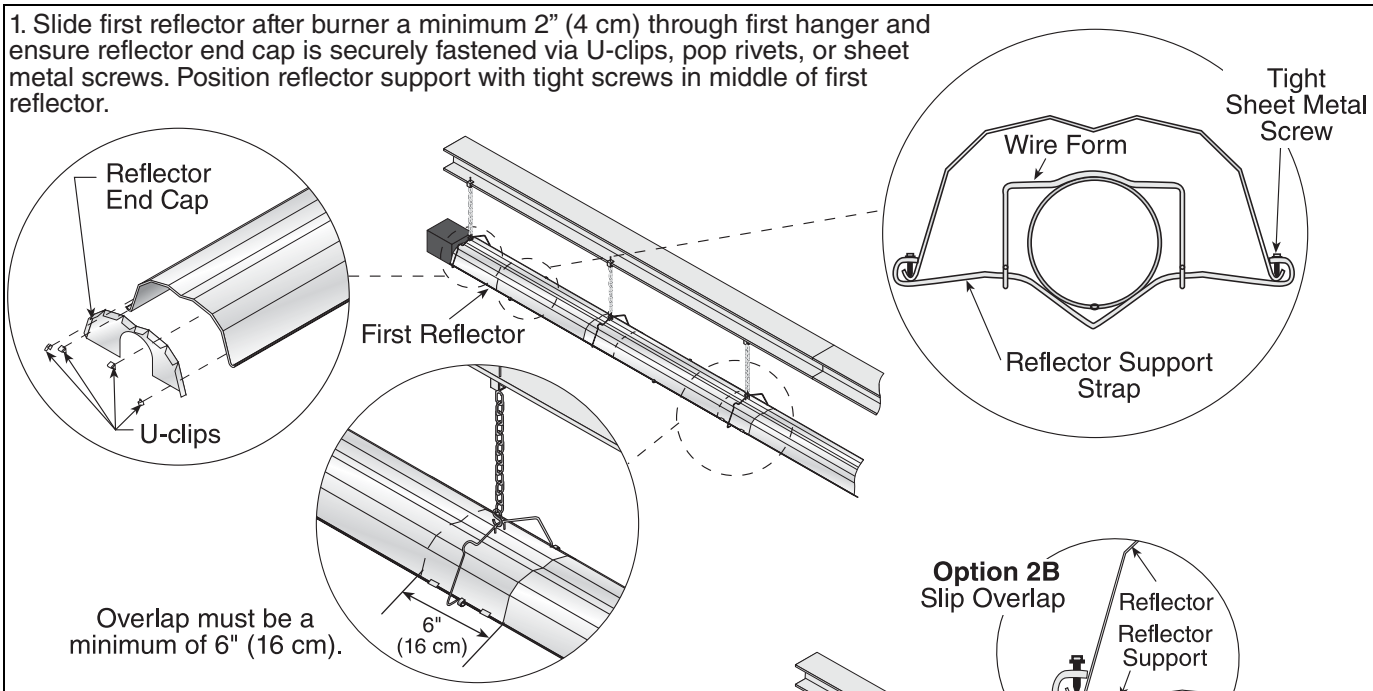

2. The overlap at the first and second reflector is a **slip overlap.** Thereafter, every third reflector joint is a slip overlap. A slip overlap is achieved by either:
   a.) both reflectors lay inside a hanger.

   (No reflector support needed.)
   b.) using a reflector support with loose screws at the reflector overlap.

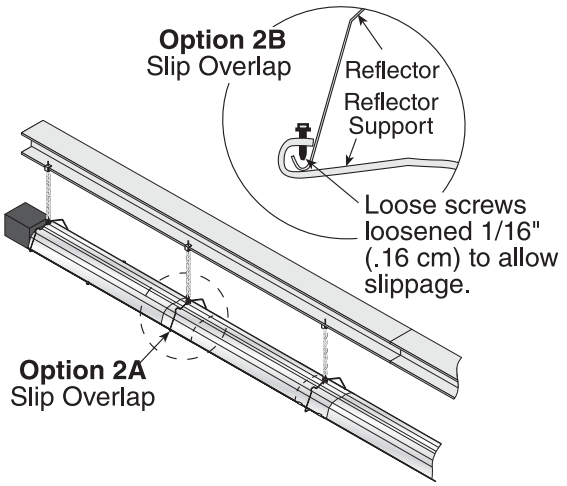

3. The remaining reflector overlaps require a **non-slip overlap** connection. To affix the reflectors together in a non-slip overlap either:
   a.) use reflector support and tight screws.
   b.) if both reflectors lay inside a hanger, u-clips or sheet metal screws may be used.

   This section of three reflectors joined together must be affixed to the tube with at least one reflector support with tight screws.

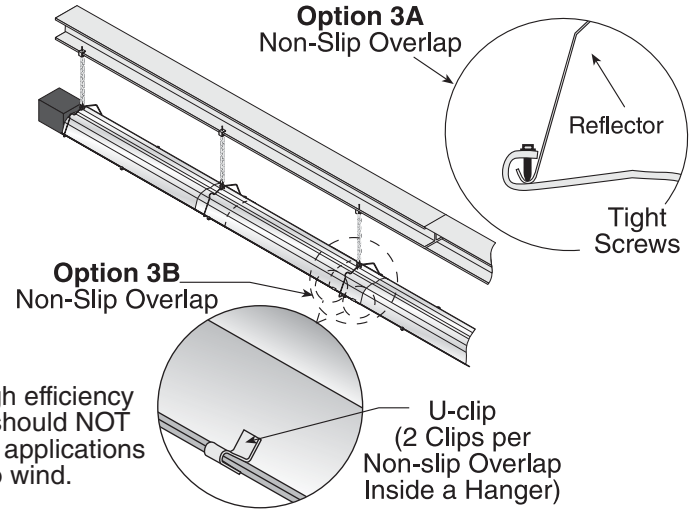

Description	Part Number
Reflector Support Package	**030500XX**
Wire Form	91908004
Reflector Support Strap	0305000X
Screw #8 x 3/4	94320812
U-Clip Package	91107720
Reflector End Cap	027508XX

NOTE: High efficiency reflectors should NOT be used in applications exposed to wind.

Step 6.7 Burner Installation

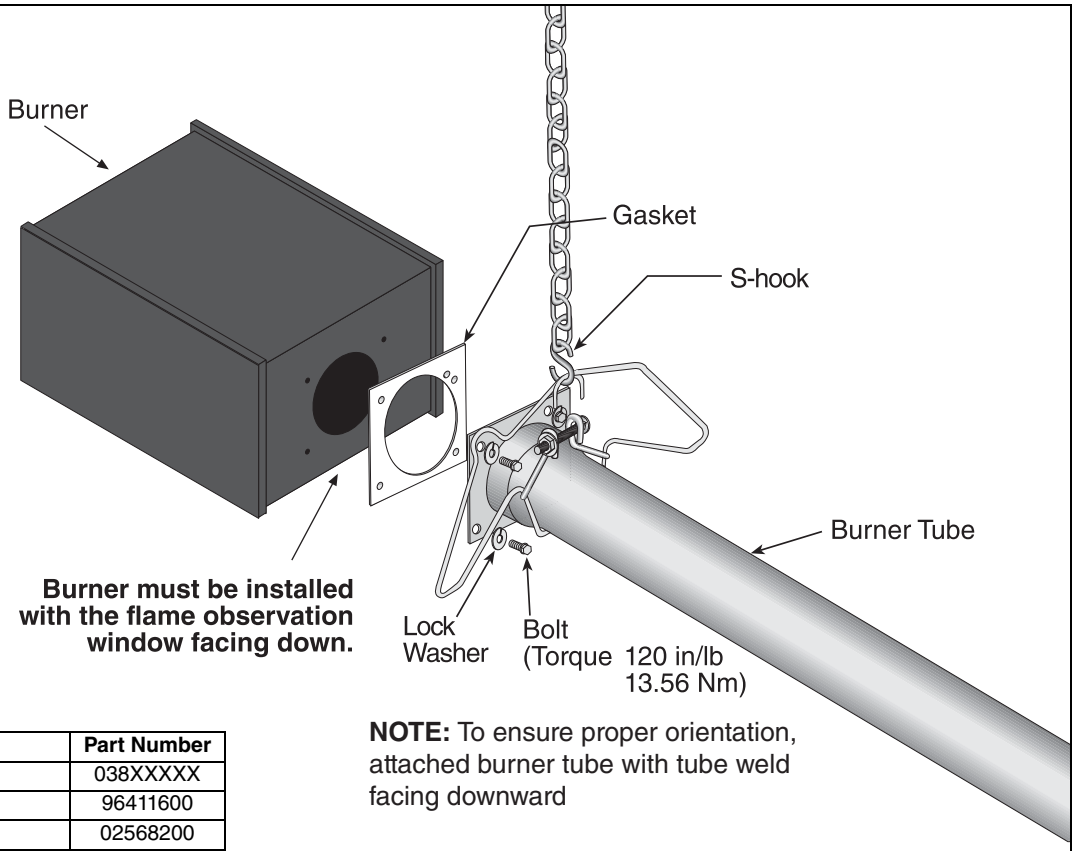

Description	Part Number
Burner	038XXXXX
Lock Washer	96411600
Gasket	02568200

NOTE: To ensure proper orientation, attached burner tube with tube weld facing downward

SECTION 7: OPTIONAL HEATER ACCESSORIES

⚠ WARNING

Cut/Pinch Hazard

Wear protective gear during installation, operation and service.

Edges are sharp.

Failure to follow these instructions can result in injury.

7.1 U-Tube Configuration

Heaters (except HEV-40) are approved for optional U-Tube configurations.

The U-Tube may be installed in either a standard horizontal position, a 45° position or in an opposite 45° position as shown *on Page 7, Figure 7 through Figure 9*. When using a U-Tube configuration, the following additional rules must be adhered to:

- A minimum of 10' (3 m) on HEV-60/80 and a minimum of 15' (4.5 m) on HEV-100/125/150/175 is required between the burner and the U-Tube.
- The correct turbulator (*See Page 23, Figure 6.5*) must be installed in the last standard section of tube.
- The burner must never be operated in a tilted position.
- The heater must be properly supported at all locations. *See Page 29, Figure 21*.

FIGURE 20: U-Tube Heater Assembly Overview

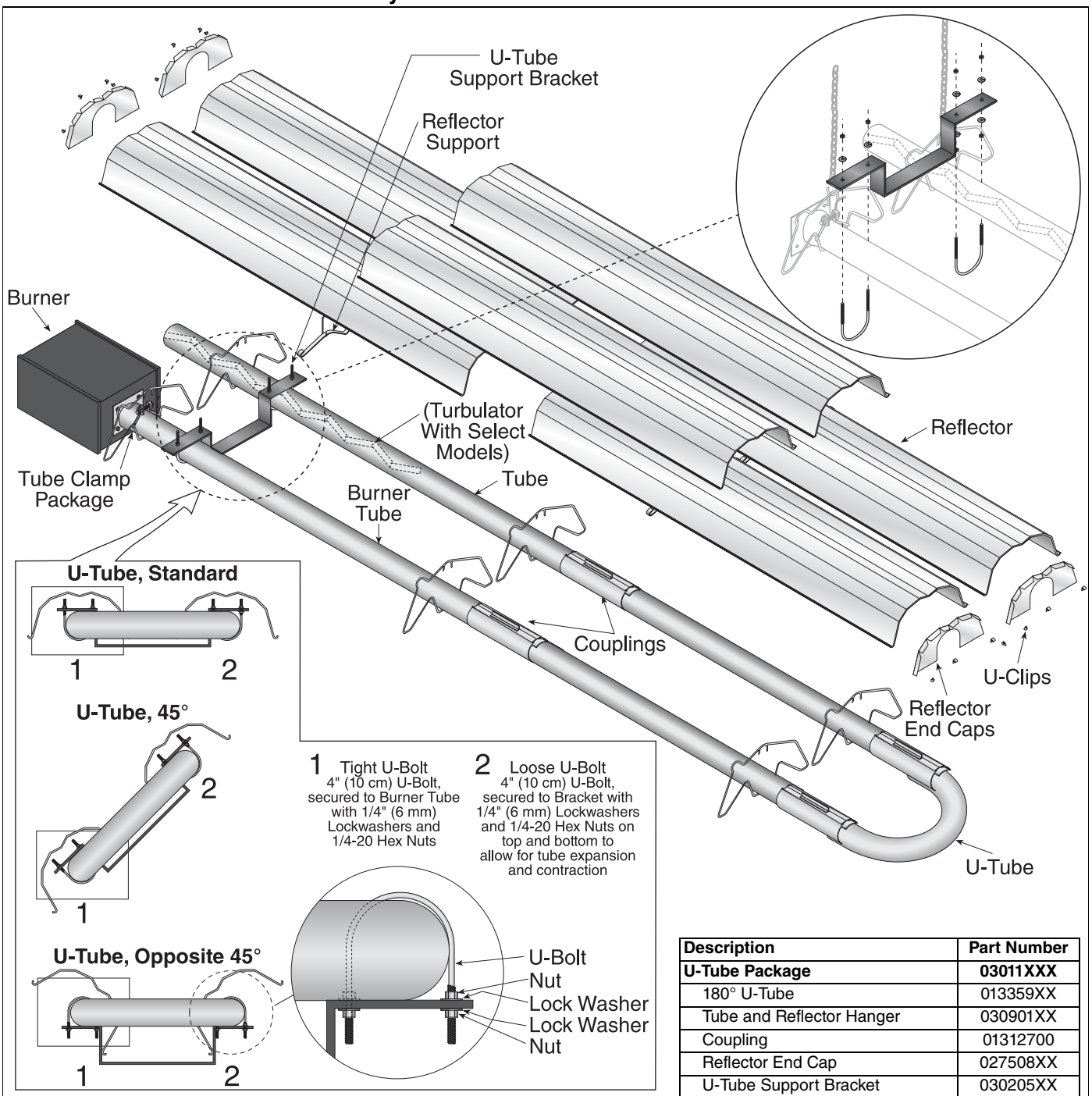

Mounting hardware shown is for indoor installation only. See Page 17, Figure 16 for outdoor suspension details.

Description	Part Number
U-Tube Package	**03011XXX**
180° U-Tube	013359XX
Tube and Reflector Hanger	030901XX
Coupling	01312700
Reflector End Cap	027508XX
U-Tube Support Bracket	030205XX
4" (10 cm) U-Bolts	91912500
Reflector Support Set	**030500XX**
S-Hook	91907302
Hex Nut	92113000
Lock Washer	96411500

FIGURE 21: U-Tube Heater Layout Overview

LEGEND

- Burner
- Reflector
- Tube 10'
- Tube 5' **
- Tube/Reflector Hanger
- Coupling Assembly
- U-Tube

a = 14" (36 cm)
reflector width (not shown)

b = 2" (5 cm)
end cap to burner

c = 2" (5 cm)
end cap to hanger

d = 7'6" (229 cm)
distance first hanger

e = 10' (305 cm)
distance between hangers

f = 5' (153 cm)
distance between last full tube hanger and half tube hanger

g = 11.5" (29.2 cm)
burner length

h = 9.5" (24 cm)
burner height

*Requires the last **reflector** before the U-Tube to be cut in half for use on both sides.

Requires the last **tube before the U-Tube to be cut in half for use on both sides.

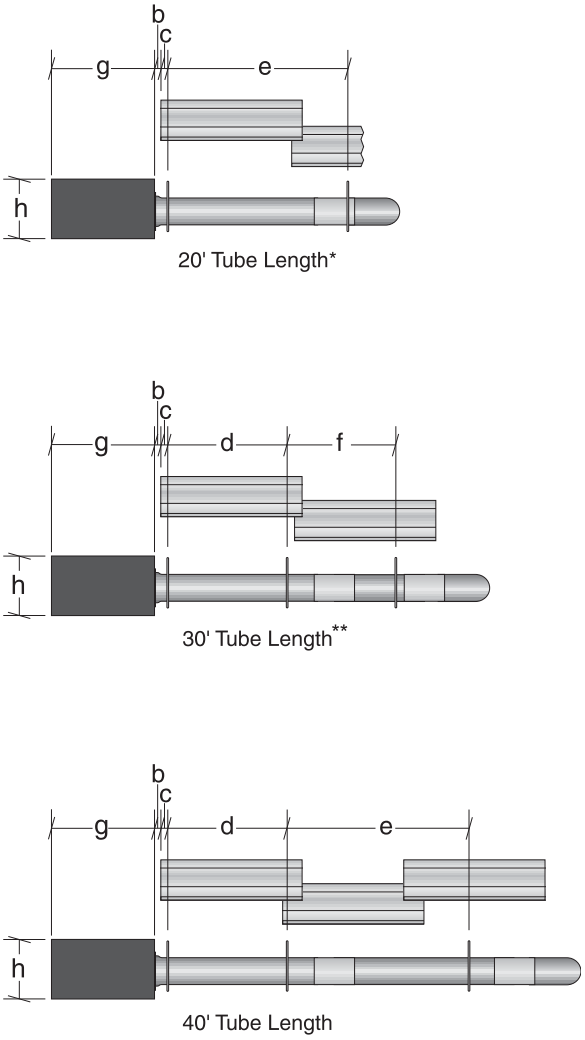

FIGURE 22: U-Tube Heater Layout Overview (Continued)

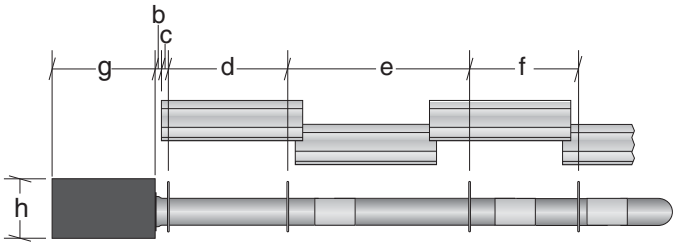

50' Tube Length* **

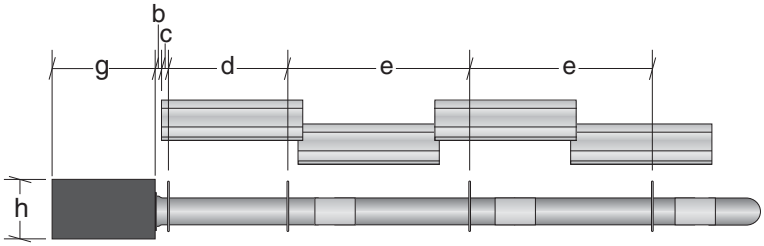

60' Tube Length

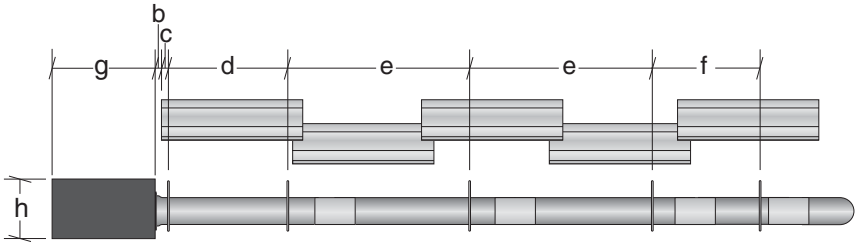

70' Tube Length**

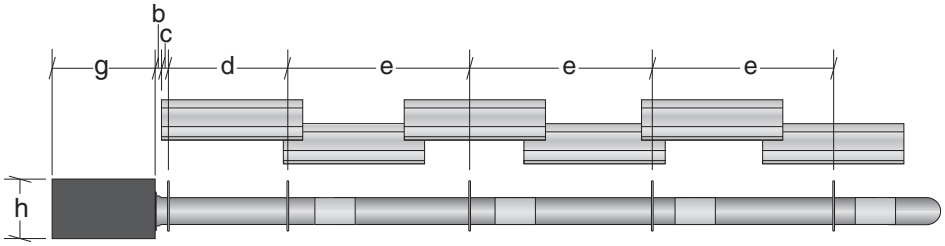

80' Tube Length

7.2 Elbow Package Configuration

Step 7.2.1 Elbow Installation

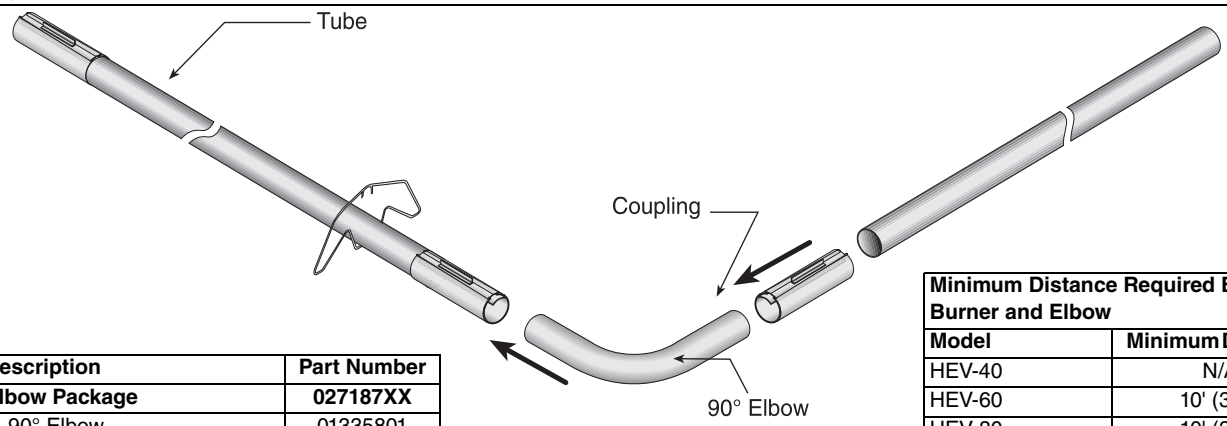

Description	Part Number
Elbow Package	**027187XX**
90° Elbow	01335801
Coupling	01312700
Reflector End Cap	0275080X
Reflector Joint Piece	0275090X
U-Clip Package	**91107720**

Minimum Distance Required Between Burner and Elbow	
Model	**Minimum Distance**
HEV-40	N/A
HEV-60	10' (3 m)
HEV-80	10' (3 m)
HEV-100	15' (4.5 m)
HEV-125	15' (4.5 m)
HEV-150	15' (4.5 m)
HEV-175	15' (4.5 m)

Step 7.2.2 Elbow Installation

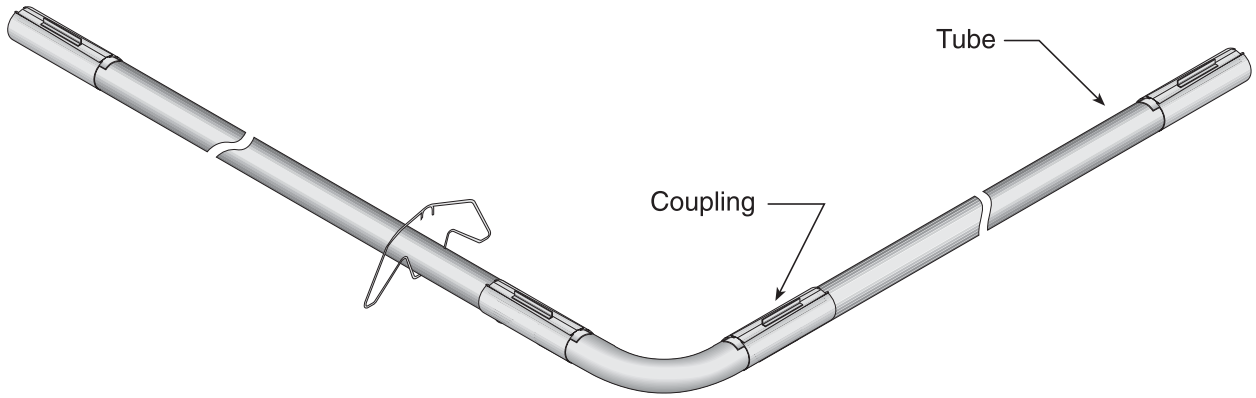

Step 7.2.3 Reflector Joint Installation

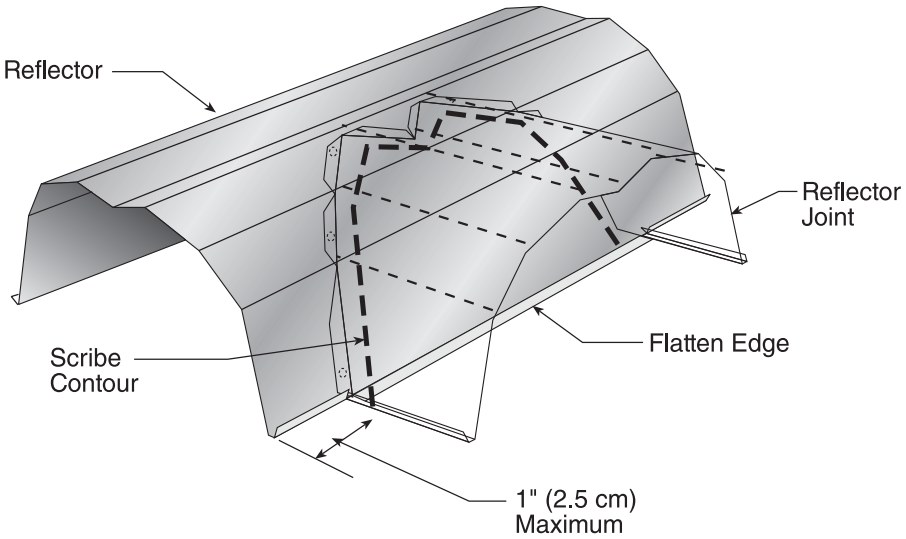

Step 7.2.4 Reflector Joint Installation

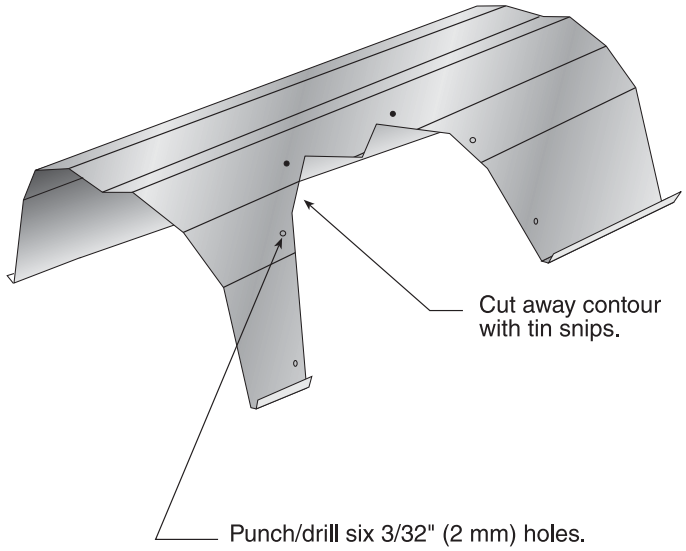

Step 7.2.5 Reflector Joint Detail

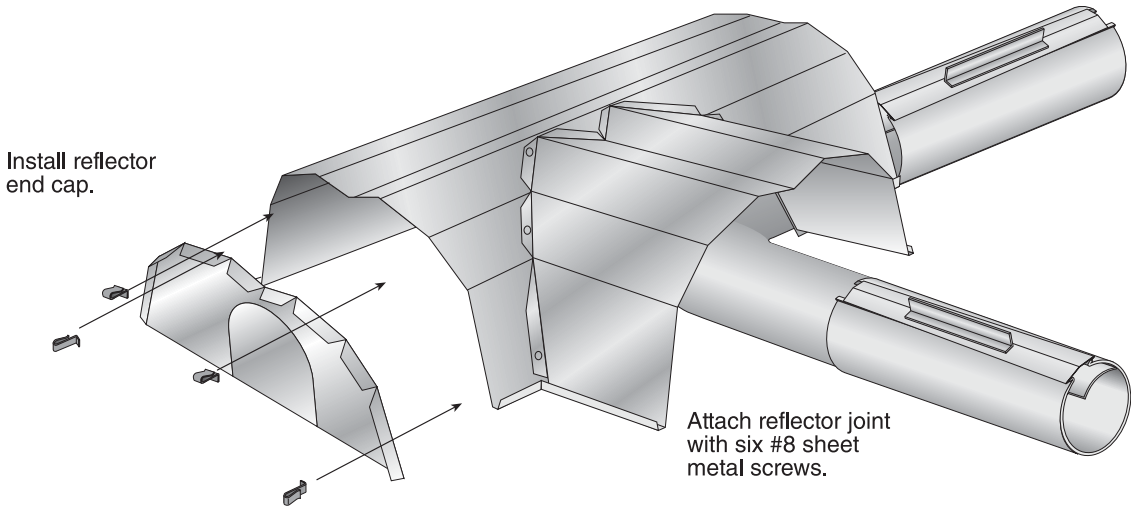

FIGURE 23: Reflector Joint Detail

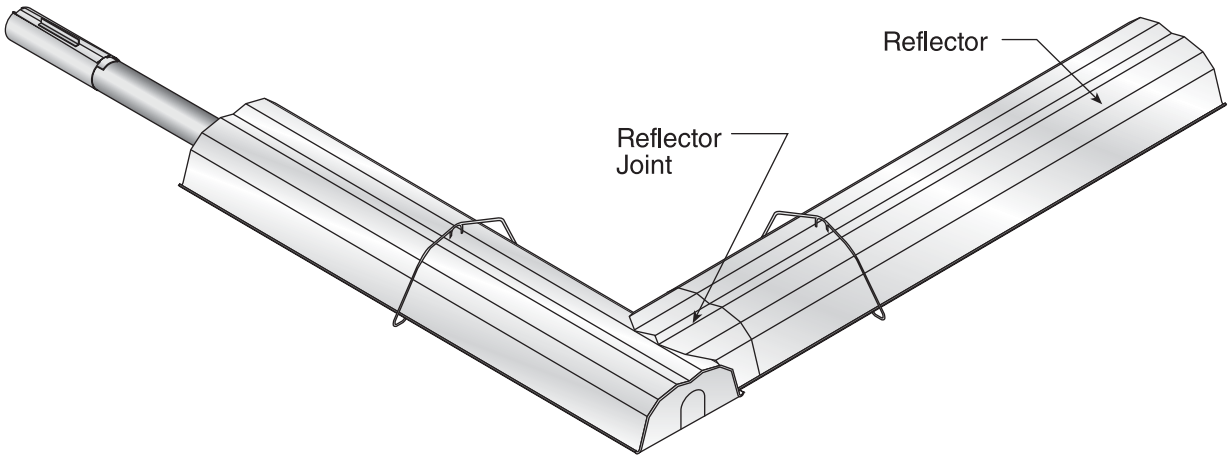

7.3 Reflector Side Extension (Not for outdoor use or areas exposed to wind)

Step 7.3.1 Bracket Installation

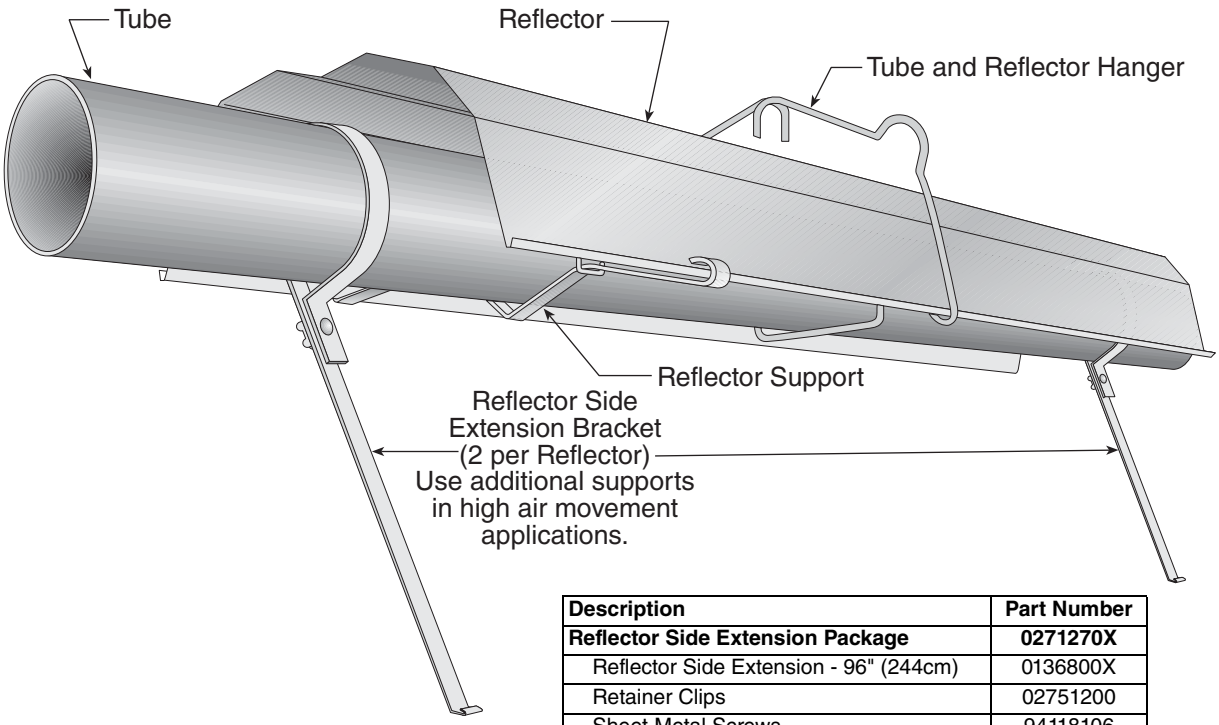

Description	Part Number
Reflector Side Extension Package	**0271270X**
Reflector Side Extension - 96" (244cm)	0136800X
Retainer Clips	02751200
Sheet Metal Screws	94118106
Order Separately	
Reflector Side Extension Bracket	01329911

Step 7.3.2 Side Reflector Installation

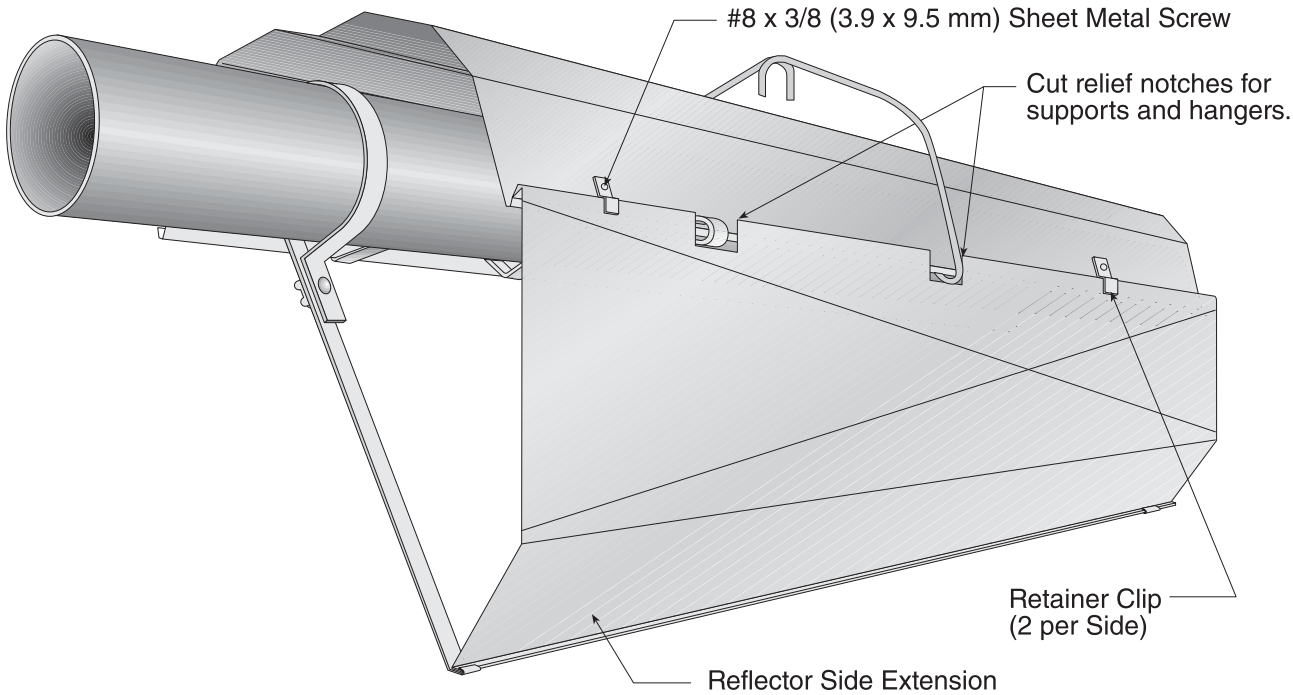

7.4 Lower Clearance Shield Installation

Step 7.4.1 Shield Support Strap Assembly

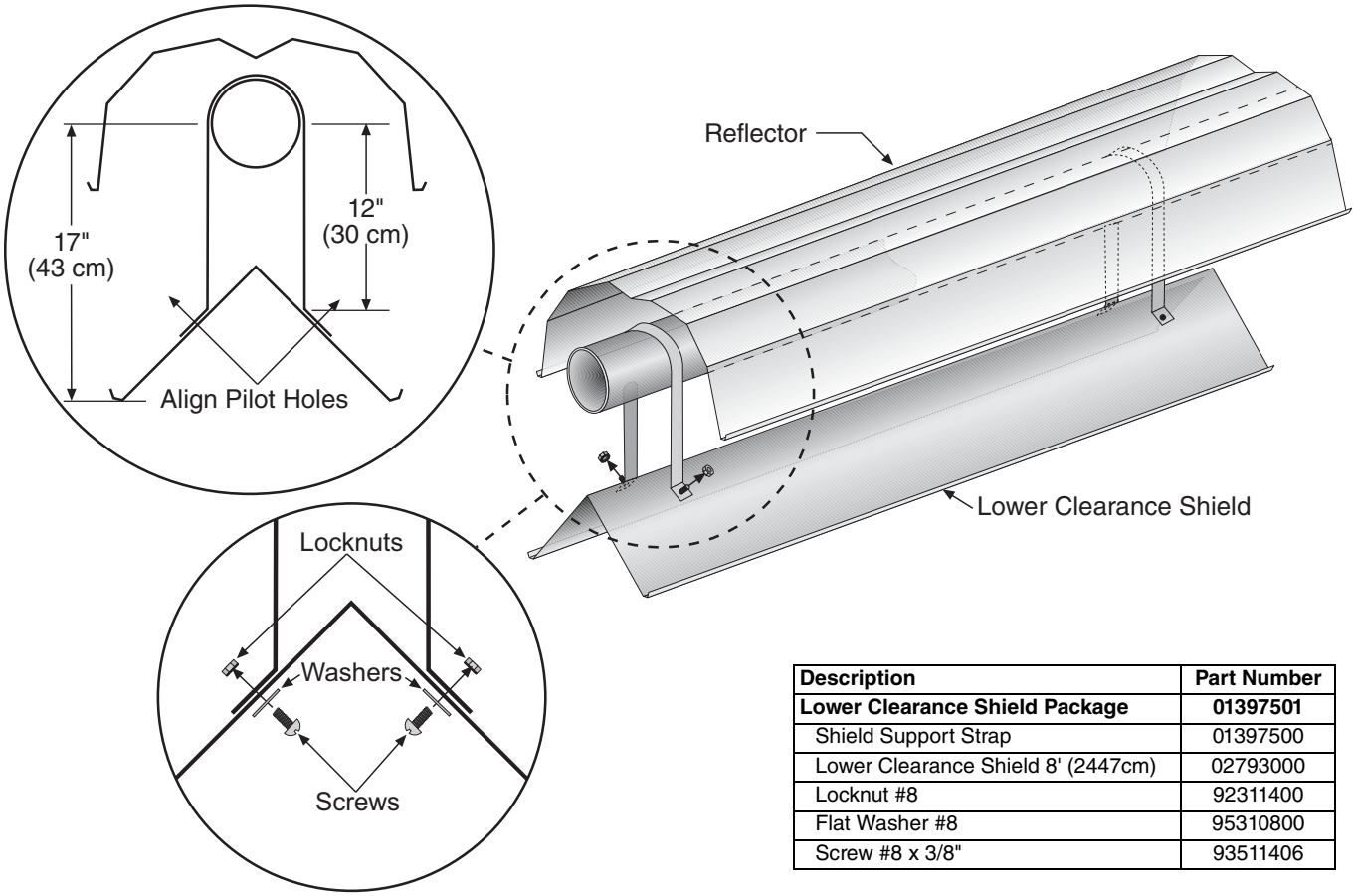

Description	Part Number
Lower Clearance Shield Package	**01397501**
Shield Support Strap	01397500
Lower Clearance Shield 8' (2447cm)	02793000
Locknut #8	92311400
Flat Washer #8	95310800
Screw #8 x 3/8"	93511406

7.5 Two-Foot Decorative Grille Installation

Step 7.5.1 Grille Installation

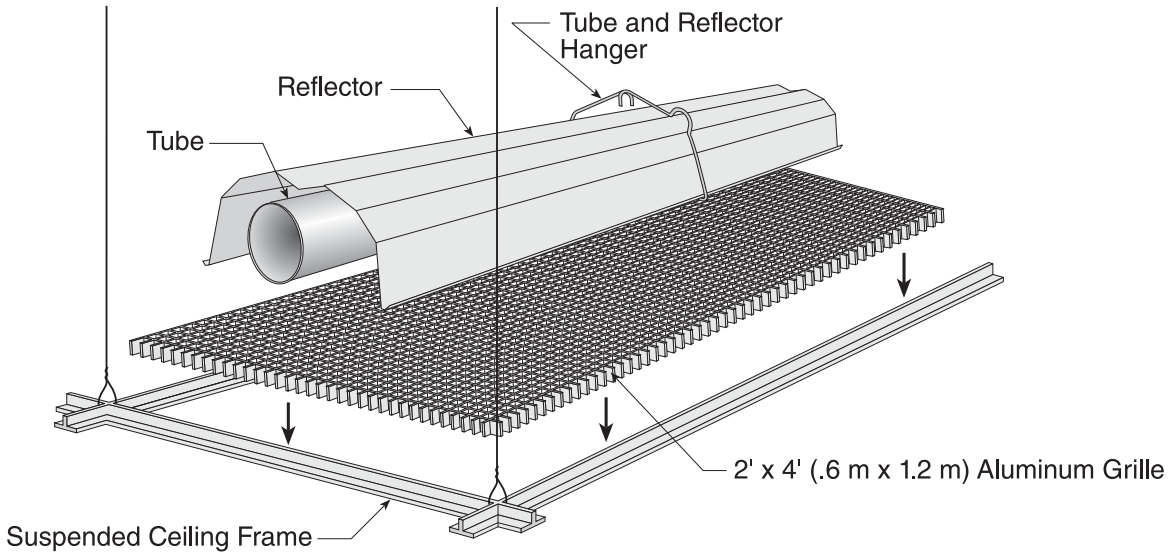

Description	Part Number
Aluminum Grille 2' x 4' (.6m x 1.2 m)	91407000

Step 7.5.2 Frame Shield Installation

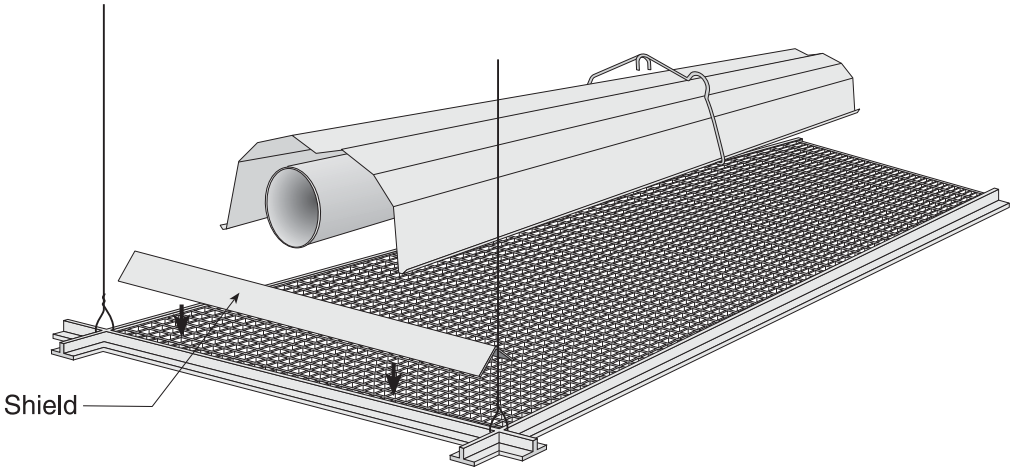

Description	Part Number
Deco Grille Shield - 24" (61cm)	01365900

Step 7.5.3 Reflector Side Extension Installation for Decorative Grilles

NOTE: If the decorative grille system is to be installed in an area with considerable air movement, it is recommended that one #8 x 3/8" sheet metal screw be installed per reflector extension to prevent it from blowing over.

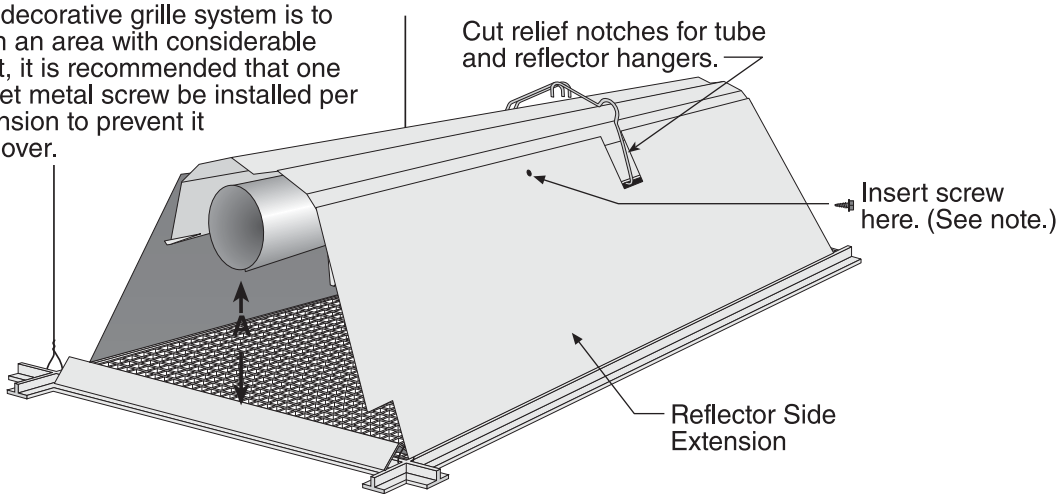

Distance "A"		Extension	
Minimum	Maximum	Part No.	Width
2" (4 cm)	6" (15 cm)	013704XX	8" (20 cm)
6" (15 cm)	10" (26 cm)	013704XX	12" (30 cm)
10" (26 cm)	14" (37 cm)	013704XX	16" (40 cm)

Description	Part Number
Reflector Side Extension	013704XX

7.6 Protective Grille Installation

Step 7.6.1 Silicone Cap Installation

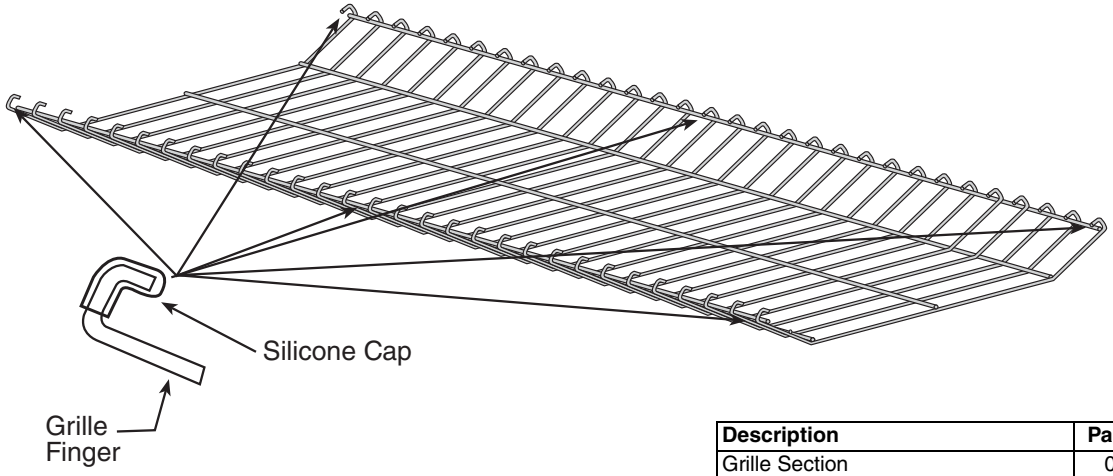

NOTE: Protective grille available for use with standard reflector ONLY.

Description	Part Number
Grille Section	08050001
Grille End Cap	08050002
Silicone Cap	91915951-6P

Step 7.6.2 Grille End Cap Installation

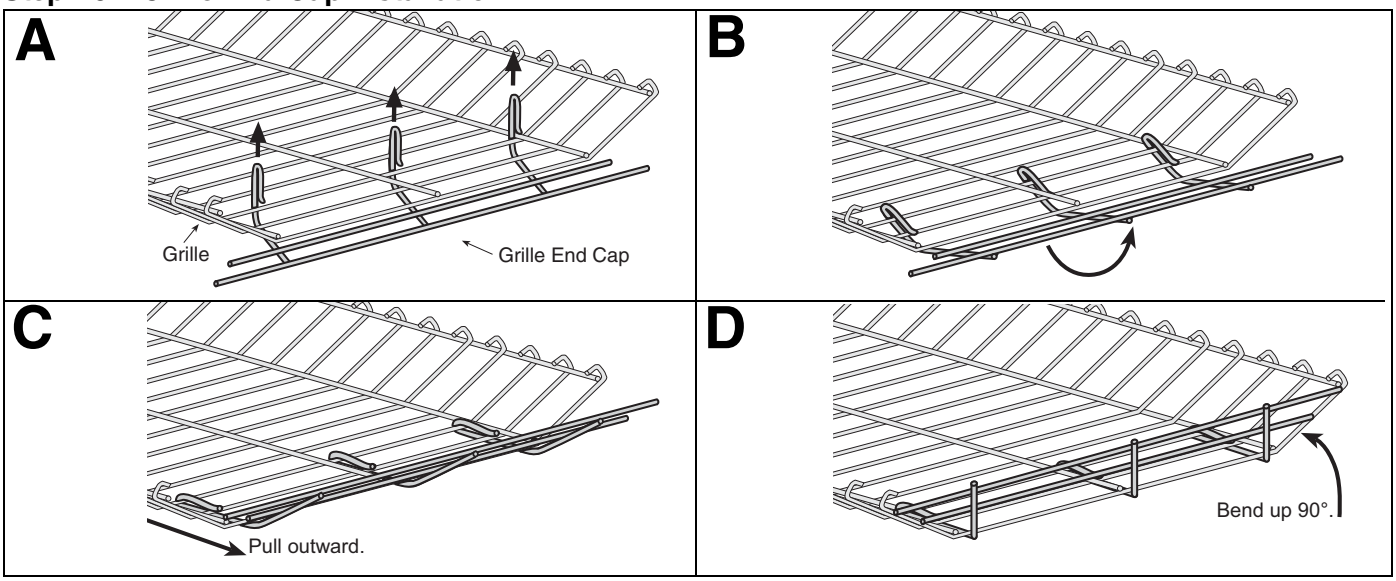

Step 7.6.3 Grille Installation

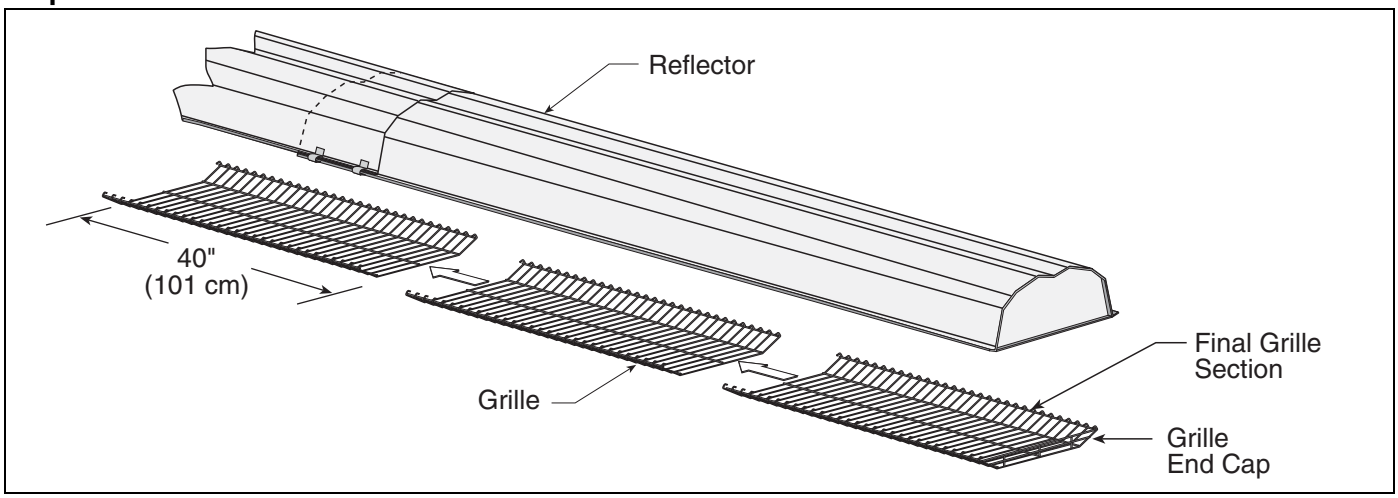

SECTION 8: VENTING

⚠WARNING

Carbon Monoxide Hazard

Heaters installed unvented must be interlocked with sufficient building exhaust.

Heaters must be installed according to the installation manual.

Failure to follow these instructions can result in death or injury.

⚠WARNING

Cut/Pinch Hazard

Wear protective gear during installation, operation and service.

Edges are sharp.

Failure to follow these instructions can result in injury.

8.1 General Venting Requirements

This heater must be vented in accordance with the rules contained in this manual and with the following national codes and any state, provincial or local codes which may apply:

United States: Refer to National Fuel Gas Code NFPA 54/ANSI Z223.1 - latest revision.

Canada: Refer to Natural Gas and Propane Installation Code CSA B149.1 - latest revision.

Exhaust end of heater will accept a 4' (10 cm) vent pipe using the vent adapter (P/N 90502700). To prevent leakage of condensation, install the vent adapter with the seam on top and seal the joint using a high temperature silicone sealant.

Any portion of vent pipe passing through a combustible wall must have an approved thimble to conform with the above listed codes.

Vent pipe must be sloped downward away from the burner 1/2" (1 cm) for every 20' (6 m).

The heater may be individually vented or common vented. When venting horizontally, a maximum of two heaters can be commonly vented. *See Page 42, Section 8.10*. When venting vertically, a maximum of four heaters can be commonly vented. *See Page 43, Section 8.11*.

The heater may also be installed unvented in certain circumstances according to building ventilation codes. Refer to the above codes *and Page 38, Section 8.2* for further information. Unvented operation also requires compliance with the clearances to combustibles given *on Page 8, Figure 12*.

The bottom of the vent or air intake terminal shall not be located less than 1' (.3 m) above grade level.

The vent shall not terminate less than 7' (2.1 m) above grade where located adjacent to public walkways.

Vent terminal must be installed at a height sufficient to prevent blockage by snow and building materials protected from degradation by flue gasses.

Secure all joints with #8 x 3/8 sheet metal screws. Seal all joints with high temperature silicone sealant.

Vent terminal must be beyond any combustible overhang.

8.1.1 United States Requirements

Vent must terminate at least 3' (.9 m) above any forced air inlet located within 10' (3.1 m).

Vent must terminate at least 4' (1.2 m) below, 4' (1.2 m) horizontally from, or 1' (.3 m) above any door, operable window, or gravity air inlet into any building.

8.1.2 Canadian Requirements

The vent shall not terminate within 6' (1.8 m) of a mechanical air supply inlet to any building.

The vent shall not terminate within 3' (.9 m) of a window or door that can be opened in any building, any non-mechanical air supply inlet to any building, or of the combustion air inlet of any other appliance.

8.2 Unvented Operation

Sufficient ventilation must be provided in the amount of 4 cfm per 1000 Btu/h firing rate (United States); 3 cfm per 1000 Btu/h firing rate (Canada).

Use of optional outside combustion air is not recommended with unvented heaters.

If exhaust fans are used to supply ventilation air, an interlock switch must be used to prevent the heater from coming on when the fans are off. This may be done using a pressure switch.

8.3 Horizontal Venting

In noncombustible walls only, vent terminal (P/N 02537801-1P) may be used.

For 4" (10 cm) vents in either combustible or noncombustible walls, use Tjernlund VH1-4 (P/N 90502100) or equivalent insulated vent terminal. Follow the manufacturer's instructions for proper installation.

For 6" (15 cm) common vents in either combustible or noncombustible walls, use Tjernlund VH1-6 (P/N 90502101) or equivalent insulated vent terminal. Follow the manufacturer's instructions for proper installation.

8.4 Vertical Venting

For 4" (10 cm), an approved vent cap (P/N 90502300) must be used.
For 6" (15 cm) common vent, an approved vent cap (P/N 90502302) must be used.
For common vertical venting of more than two heaters, *See Page 43, Section 8.11*.
A vent shall not extend less than 2' (.6m) above the highest point where it passes through a flat roof of a building.

8.5 Unvented Operation Tube Termination

Turndown type vent terminal with a screen must be installed at the exhaust end of the tube. Vent terminal design shall not incorporate backdraft flap.

FIGURE 24: Tube Termination

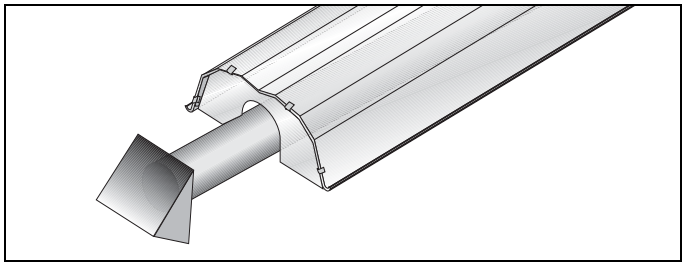

8.6 Length Requirements

The maximum vent length allowed is 45' (13.7 m). The maximum outside air supply duct length allowed is 45' (13.7 m).

The total vent length, plus outside air duct length, plus any extensions to minimum heat exchanger lengths, cannot exceed 65' (19.8 m).

Vent length should be limited to less than 20' (6 m). If using vent lengths greater than 20' (6 m), condensation will form in the vent pipe. Insulation and additional sealing measures (high temperature silicone at all seams) are required. Optional heat exchanger beyond minimum lengths is considered as vent length for length determination.

Subtract 15' (4.6 m) of maximum allowed vent or duct length per vent elbow if more than two are used.

8.6.1 Vent Material Recommendations

Vent recommendations:

1. Porcelain coated tubing 4" (10 cm) O.D. (P/N 9141030D)
2. Heat treated aluminized tubing 4" (10 cm) O.D. (P/N 91409408)
   Heat treated aluminized tubing 6" (15 cm) O.D. (P/N E0009105)
3. Single wall flue pipe - minimum 26 ga. (Supplied by others)

NOTE: 4" (10 cm) O.D. Porcelain coated tubing (P/N 9141030D), 4" (10 cm) O.D. Heat treated aluminized tubing (P/N 91409408), and 6" (15 cm) O.D. Heat treated aluminized tubing (P/N E0009105) are equivalent to single wall flue pipe.

FIGURE 25: Combustion Air Weather Vent (P/N 03700009)

To be installed in place of flue collar for installations without fresh air vent pipe.

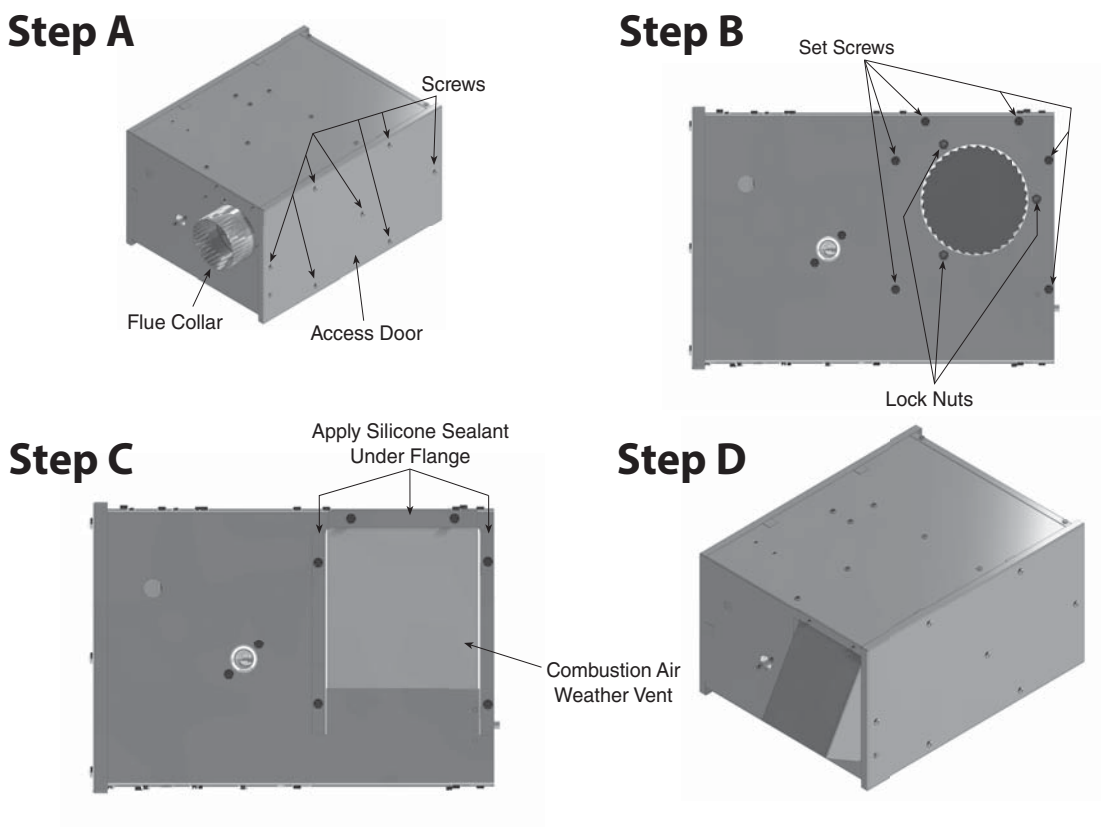

Step A: Remove blower side access door from burner by unscrewing the 7 screws as shown. Carefully remove door to gain access to combustion blower.

Step B: Unscrew 3 lock nuts along with 6 set screws from rear of unit as shown. Pull combustion blower from burner and remove flue collar. While keeping blower gasket and bird screen in place, replace combustion blower and tighten locknuts previously removed in step A.

Step C: Apply silicone sealant around Combustion Air Weather Vent flange. Carefully align 6 pre-drilled holes on weather vent flange to 6 holes on burner. Tighten 6 set screws previously removed in step 2 to secure weather vent to burner.

Step D: Reinstall access door and tighten screws.

8.7 Venting Options

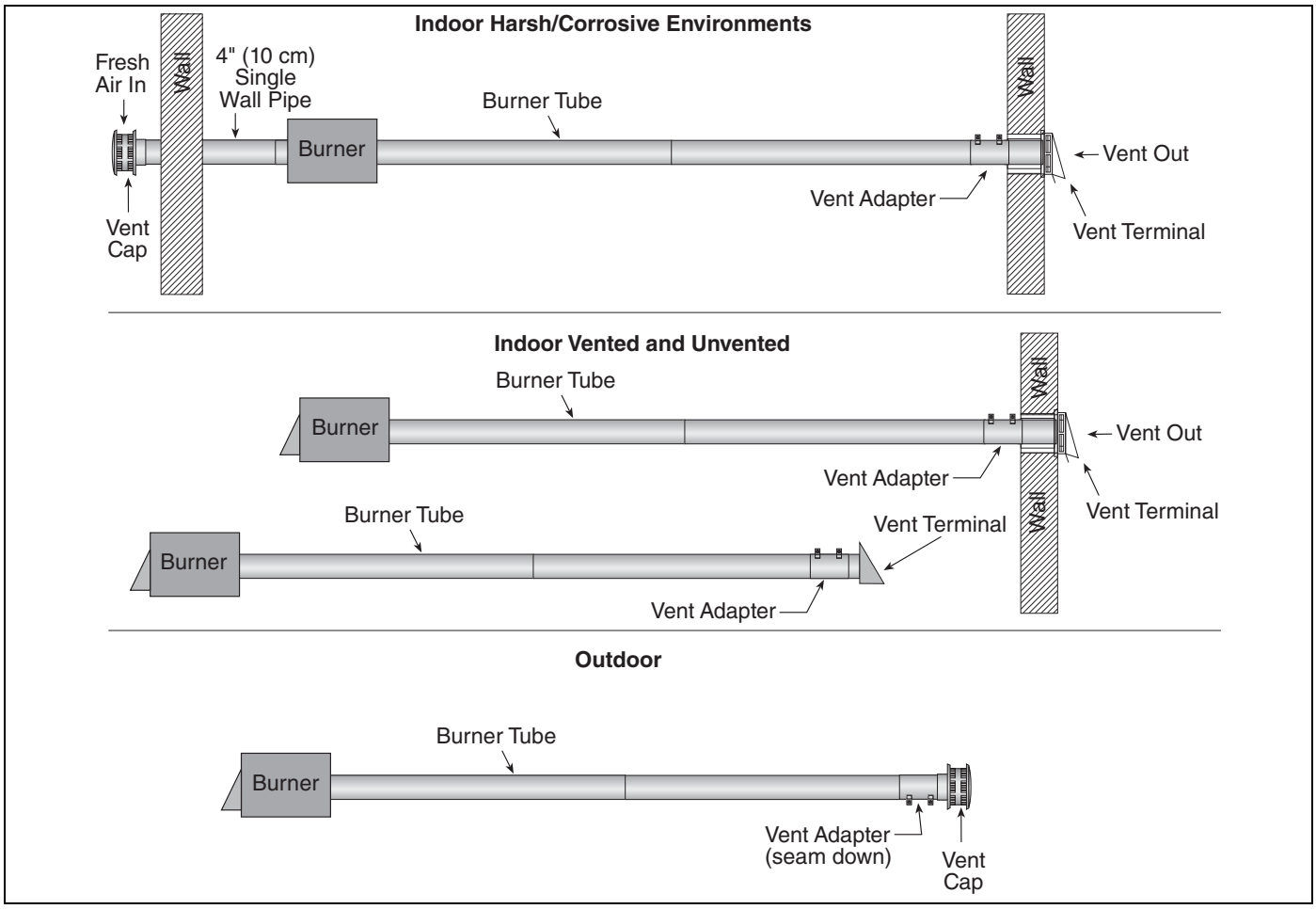

8.8 Horizontal Ventilation 4" (10 cm) Pipe

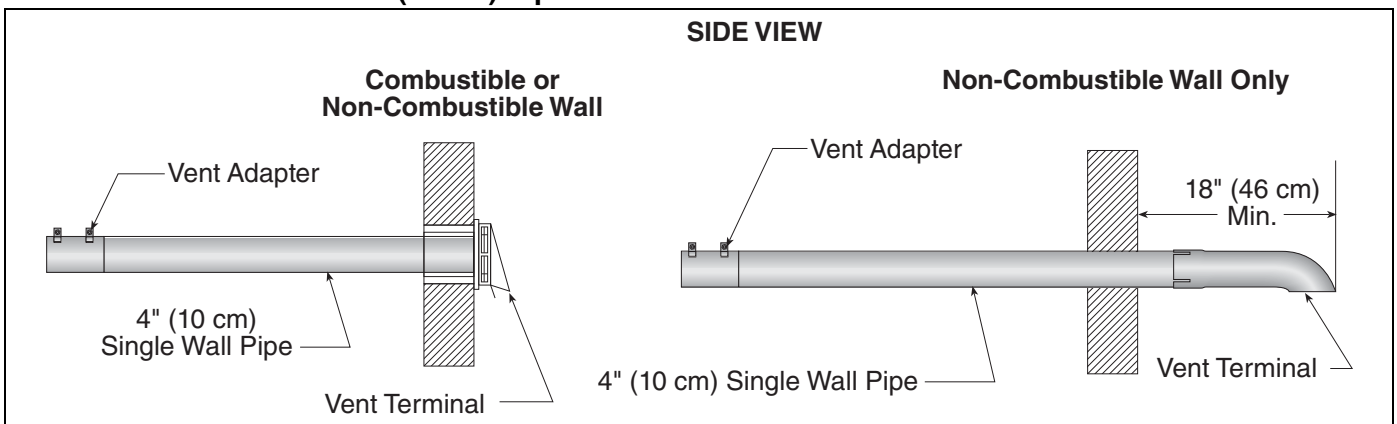

Description	Part Number
Vent Terminal (Comb. Wall)	90502100
Vent Terminal	02537801-XX

8.9 Vertical Ventilation 4" (10 cm) Pipe

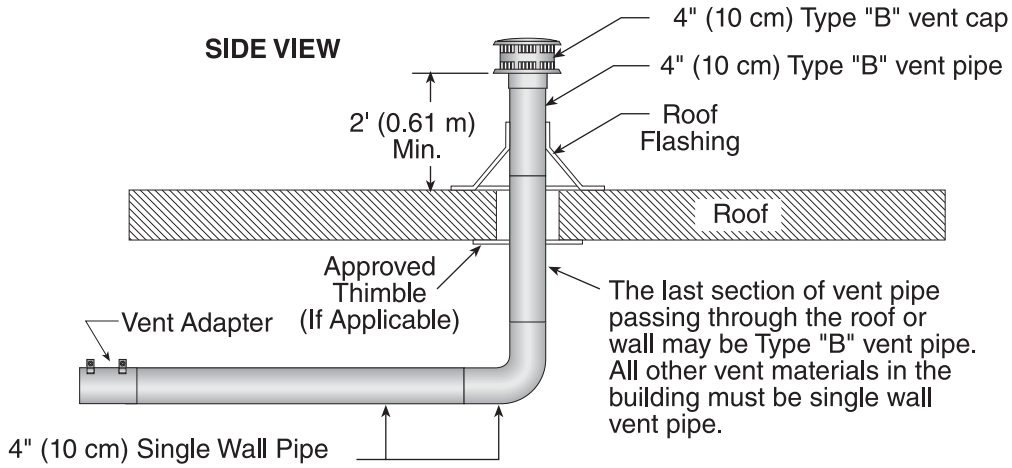

Description	Part Number
Vent Cap 4" (10 cm)	90502300

Step 8.10 Common Sidewall Venting

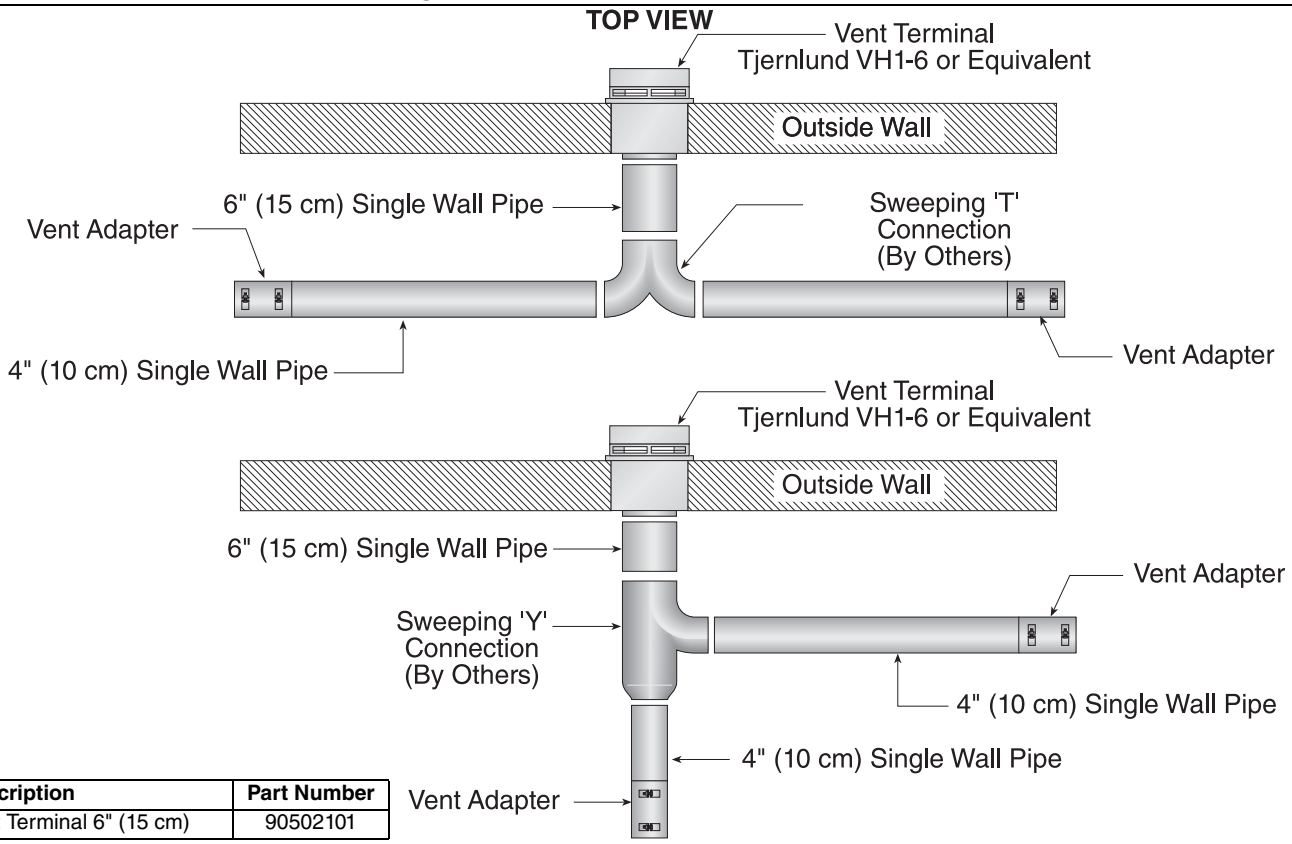

Description	Part Number
Vent Terminal 6" (15 cm)	90502101

Requirements:

- Maximum of two heaters can be commonly vented through a side wall.
- Heaters must be of the same BTU output.
- Heaters must be controlled by a common thermostat.

8.11 Common Vertical Venting

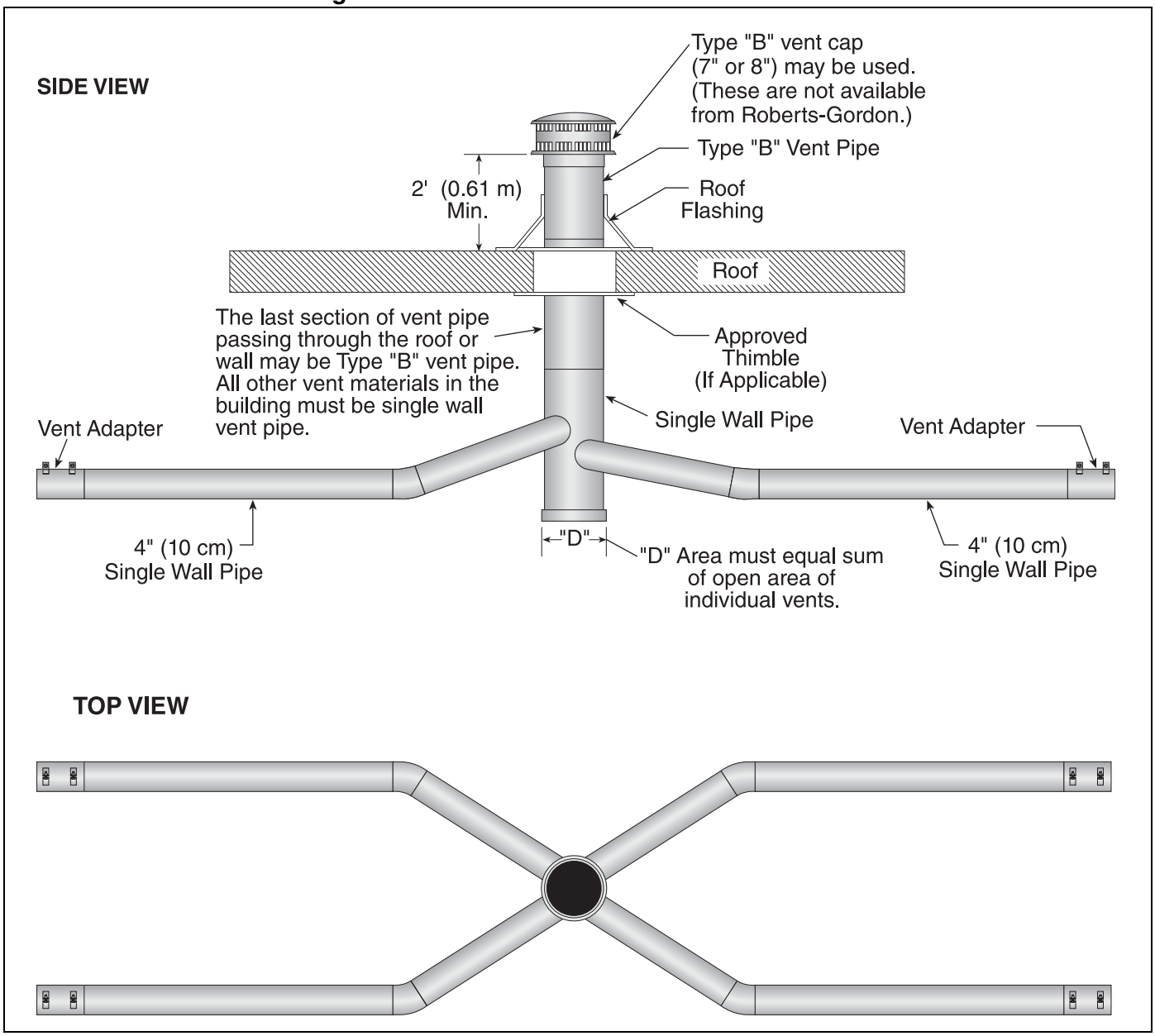

Requirements:

- Maximum of four heaters can be commonly vented through the roof.
- Heaters must be of the same BTU output.
- Heaters must be controlled by a common thermostat.
- Connections to a common stack must be positioned to avoid direct opposition between streams of combustion gases.

8.12 Outside Combustion Air Supply

IMPORTANT: If the building has a slight negative pressure or corrosive contaminants, such as halogenated hydrocarbons, are present in the air, an outside combustion air supply to the heater is required. Seal all combustion air pipe joints.

Use of optional outside combustion air is not recommended with unvented heaters.

The air supply duct may have to be insulated to prevent condensation on the outer surface. The outside air terminal must not be more than 1' (31 cm) above the vent termination while maintaining a minimum distance of 3' (93 cm) for both vertical and horizontal venting.

8.12.1 Length Requirements

Follow the constraints listed *on Page 39, Section 8.6*.

8.12.2 Vertical Outside Air Supply for Single Heater Installation

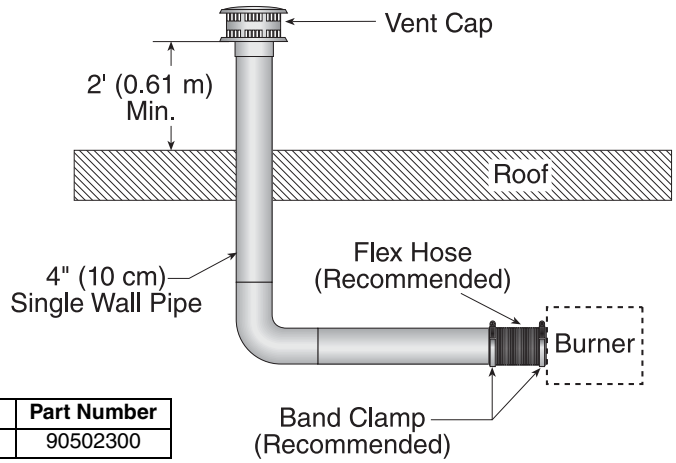

Description	Part Number
Vent Cap 4" (10 cm)	90502300

8.12.3 Horizontal Outside Air Supply for Single Heater Installation

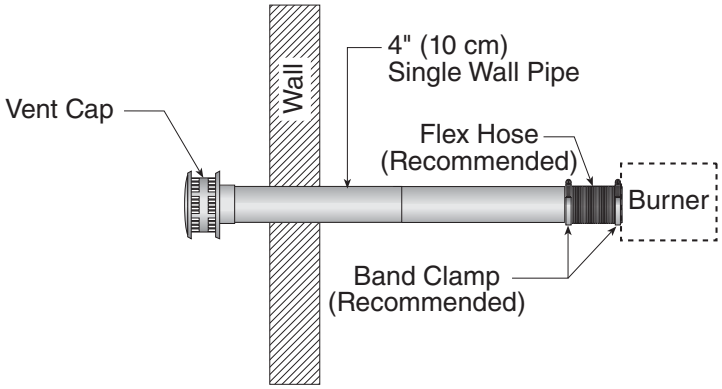

Description	Part Number
Vent Cap 4" (10 cm)	90502300

8.12.4 Vertical Outside Air Supply for Double Heater Installation

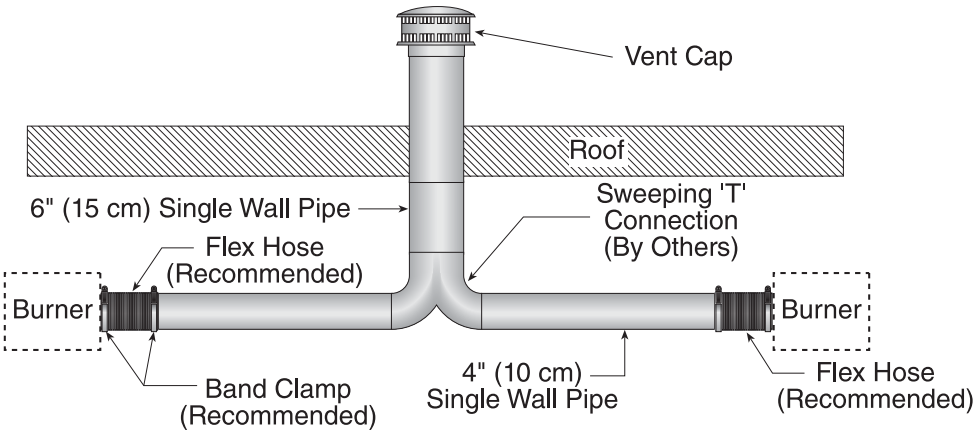

Description	Part Number
Vent Cap 6" (15 cm)	90502302

Requirements:

- Heaters must be controlled by a common thermostat.

8.12.5 Horizontal Outside Air Supply for Double Heater Installation

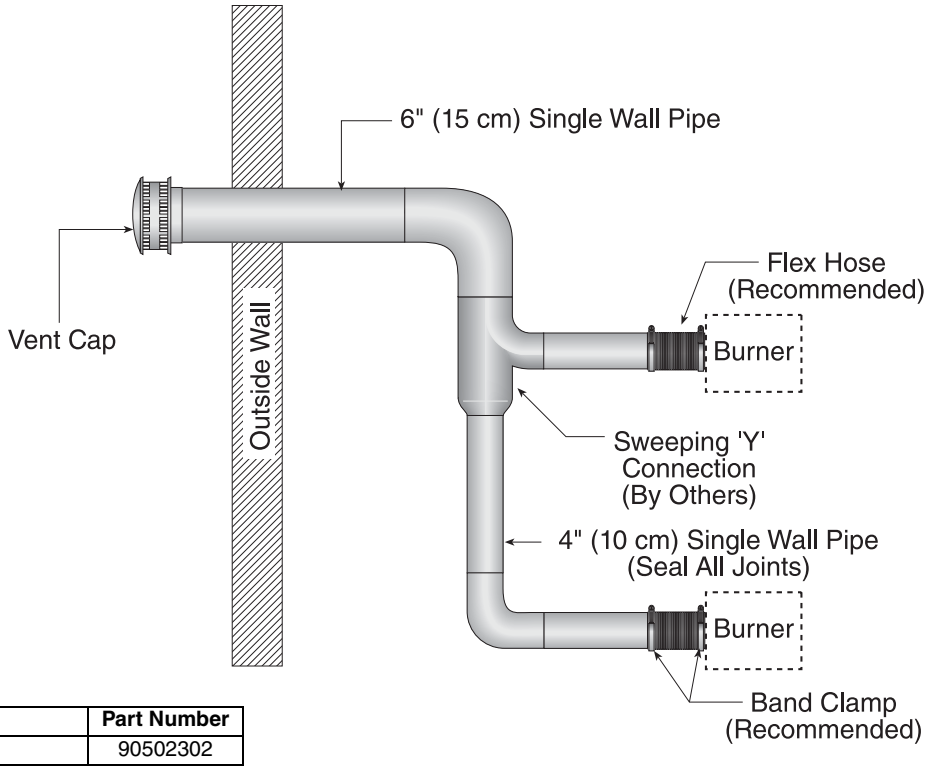

Description	Part Number
Vent Cap 6" (15 cm)	90502302

Requirements:

- Heaters must be controlled by a common thermostat.

SECTION 9: GAS PIPING

⚠ WARNING

Fire Hazard

Tighten gas hose fittings to connect gas supply according to Figure 23.

Gas hose can crack when twisted.

Gas hose moves during normal operation.

Use only 36" (91 cm) long connector of 1/2" or 3/4" nominal ID.

Connector supplied with heater for U.S. models (not with Canadian models).

Failure to follow these instructions can result in death, injury or property damage.

⚠ WARNING

Explosion Hazard

Leak test all components of gas piping before operation.

Gas can leak if piping is not installed properly.

Do not high pressure test gas piping with heater connected.

Failure to follow these instructions can result in death, injury or property damage.

Install the gas hose as shown in *Figure 26*. The gas hose accommodates expansion of the heating system and allows for easy installation and service of the burner. Before connecting the burners to the supply system, verify that all high pressure testing of the gas piping has been completed.

There is an expansion of the tube with each firing cycle. This will cause the burner to move with respect to the gas line. This can cause a gas leak resulting in an unsafe condition if the gas connection is not made in strict accordance with *Figure 26*.

Meter and service must be large enough to handle all the burners being installed plus any other connected load. The gas line which feeds the system must be large enough to supply the required gas with a maximum pressure drop of 1/2" wc When gas piping is not included in the layout drawing, the local gas supplier will usually help in planning the gas piping.

Gas lines must meet applicable codes:
United States: The Flexible Stainless Steel Gas Hose (US models) supplied with the heater is certified per the Standard for Connectors for Gas Appliances, ANSI Z21.24/CSA 6.10 - latest revision.
Canada: The Rubber Type 1 Gas Hose (Canadian models) optional with the heater is certified as being in compliance with the Standard for Elastomeric Composite Hose and Hose Couplings for Conducting Propane and Natural Gas, CAN/CGA 8.1 - Latest revision.

- **Check the pipe and tubing ends for leaks before placing heating equipment into service. When checking for gas leaks, use a soap and water solution; never use an open flame.**

FIGURE 26: Gas Connection with Flexible Gas Hose

CORRECT POSITIONS

Shut-Off Valve (included with gas hose) must be parallel to burner gas inlet. The 3" (8 cm) displacement shown is for the cold condition. This displacement may reduce when the system is fired.

High Gas Pressure Regulator to be installed upstream of flexible gas hose if inlet pressure exceeds maximum allowance.

⚠ CAUTION

Product Damage Hazard

Hold gas nipple securely with pipe wrench when attaching gas hose.

Failure to follow these instructions can result in product damage.

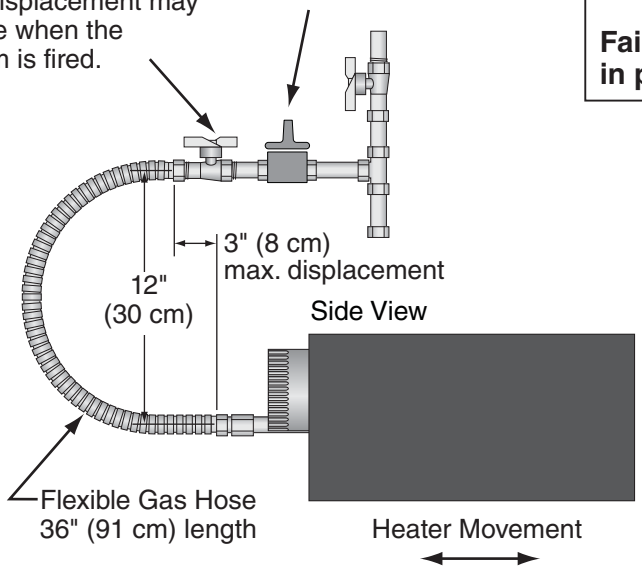

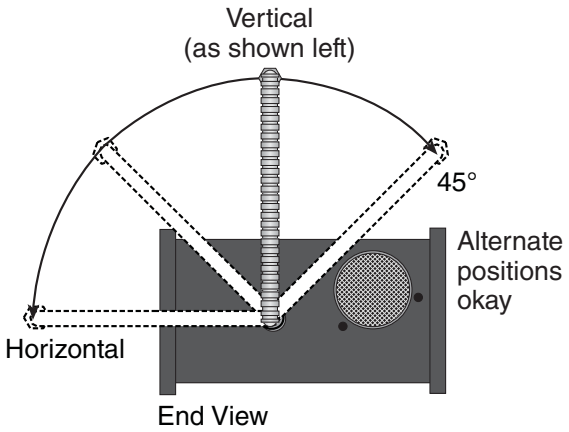

Description	Part Number
High Pressure Regulator - 2 psi	90207600
High Pressure Regulator - 5 psi	90207601

INCORRECT POSITIONS (WRONG INSTALLATION)

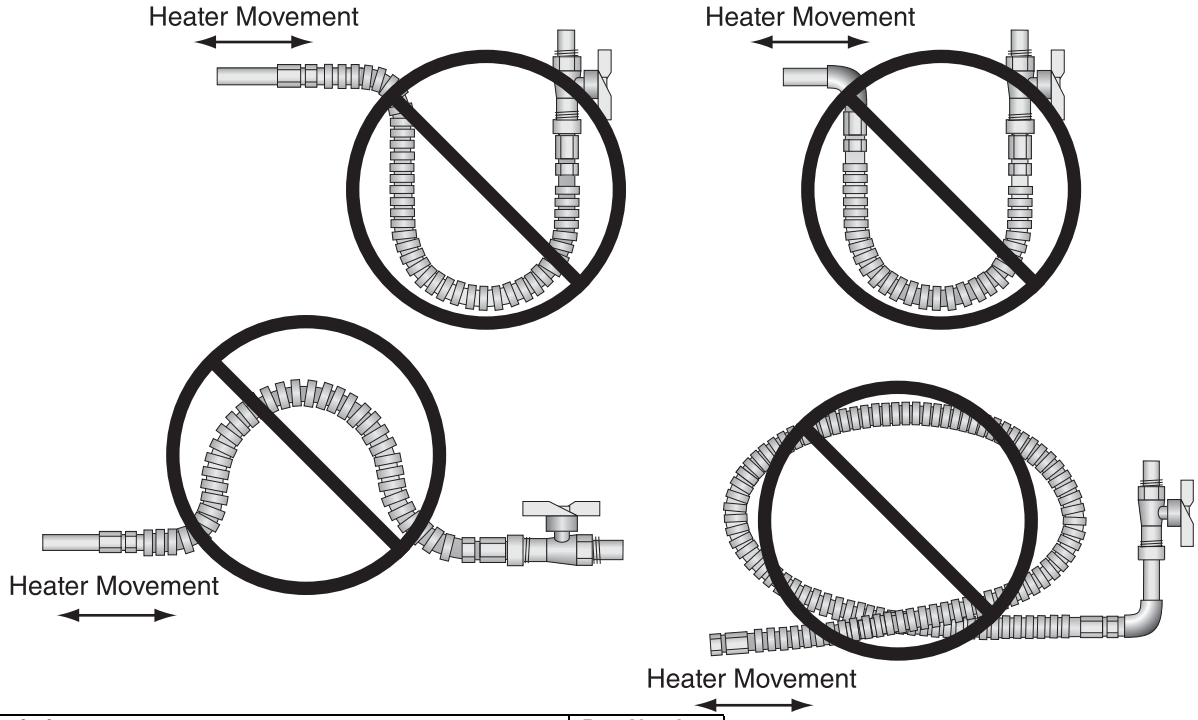

Description	Part Number
3/4" Flexible Stainless Steel Coated Gas Hose (US Models)	91412203
3/4" Rubber Type 1 Gas Hose (Canadian Models)	91412207

SECTION 10: WIRING

⚠ DANGER

Electrical Shock Hazard

Disconnect electric before service.

Heater must be properly grounded.

Failure to follow these instructions can result in death or electrical shock.

Heaters can be controlled using several methods. Normally thermostats are used to control the heaters but they can also be controlled by an Energy Management System. *Section 10.1* below illustrates the connection for heaters controlled by a line voltage thermostat. NOTE: In order to use line voltage thermostats, the low voltage terminal located at the back of each burner must be connected as shown in the detail. For a single heater on a low voltage thermostat, *See Section 10.2* below. To control multiple heaters on one low voltage thermostat, *See Page 49, Section 10.3*. NOTE: In order to control multiple heaters on one low voltage thermostat, the low voltage terminals on each heater must be connected as shown in detail. Heater must be grounded in accordance with applicable codes: **United States:** refer to National Electrical Code® NFPA 70 - latest revision **Canada:** refer to Canadian Electrical Code, CSA C22.1 Part I - latest revision.If any of the original internal wiring must be replaced, it must be replaced with wiring materials having a temperature rating of at least 105° C and 600 V.

10.1 Line Voltage Thermostat Wiring

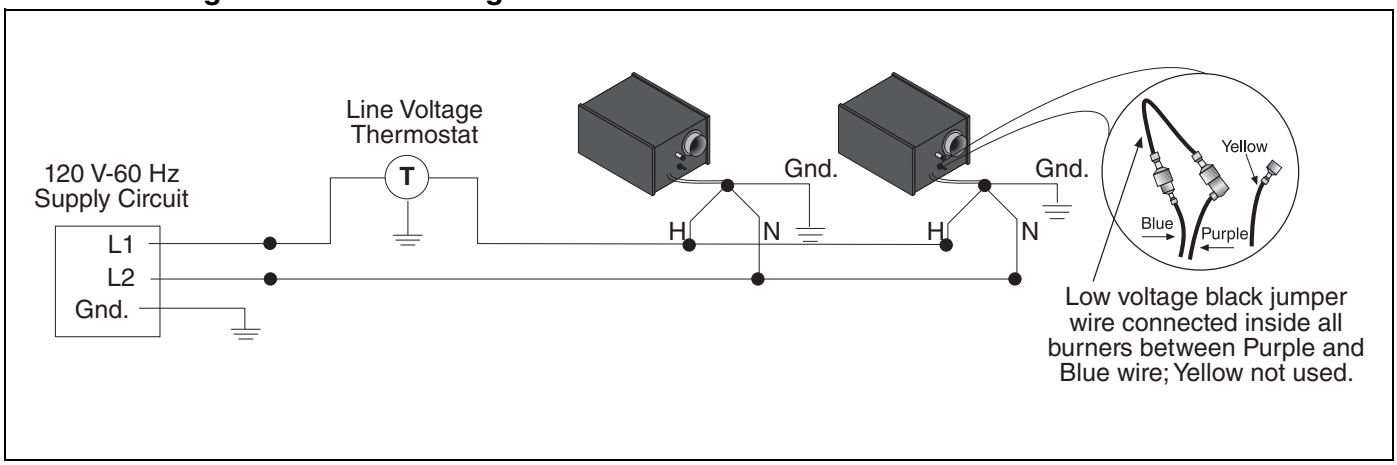

10.2 Low Voltage Thermostat with One Burner

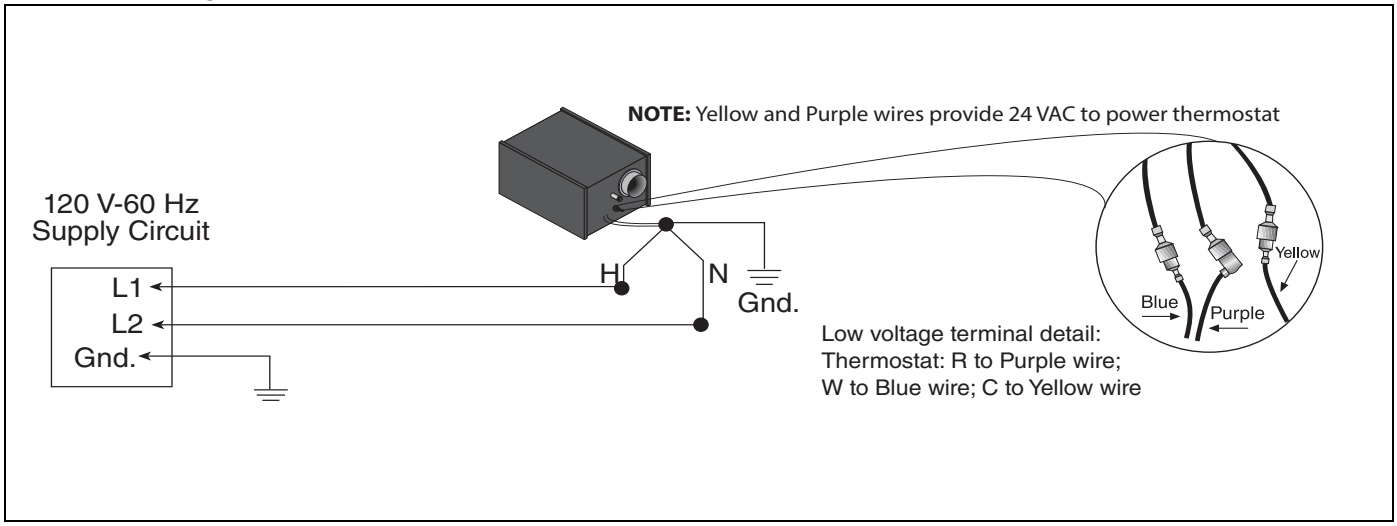

10.3 Low Voltage Thermostat Wiring with Multiple Burners

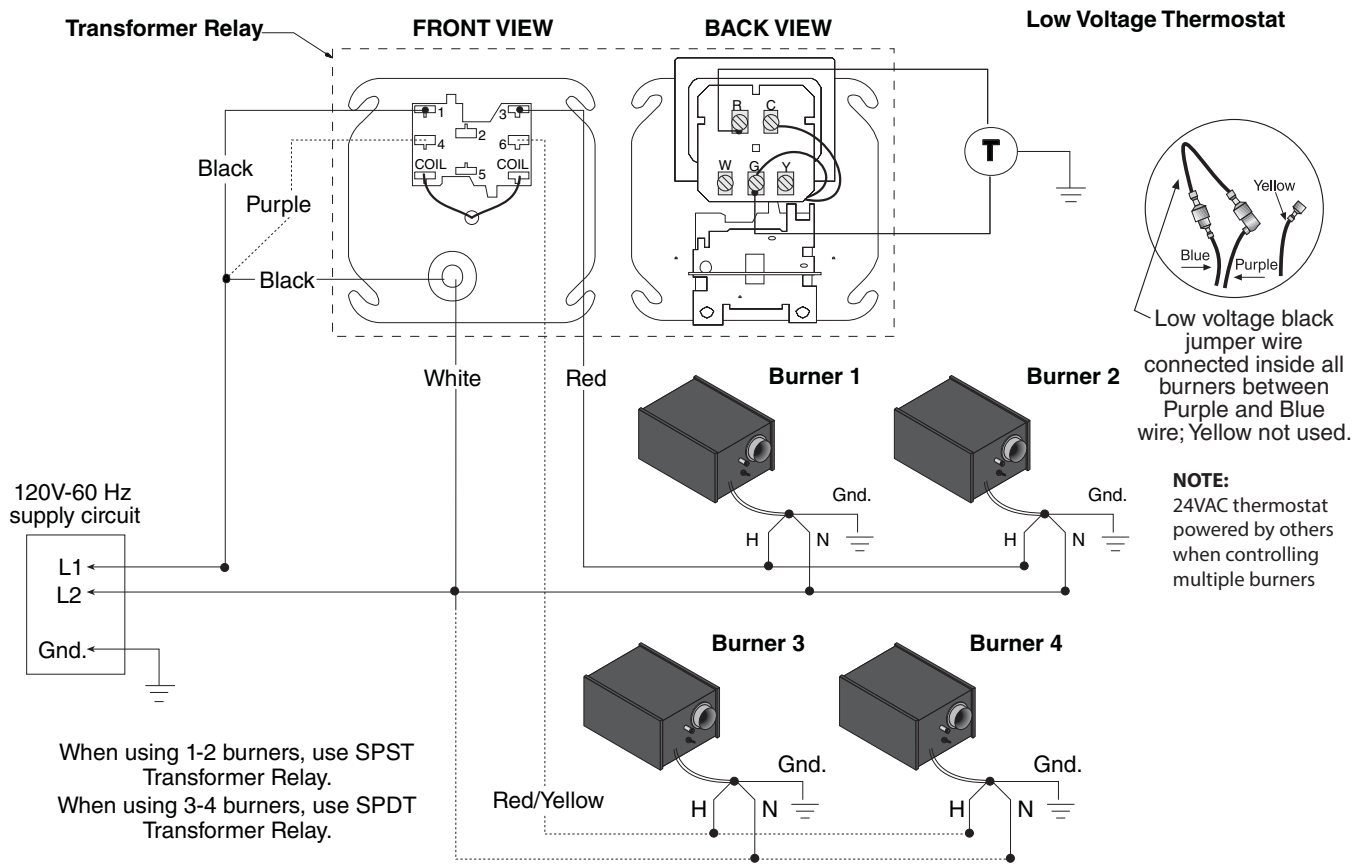

Description	Part Number
Thermostat Relay-SPST	90417600K
Transformer Relay-SPDT	90436300

10.4 Internal Wiring

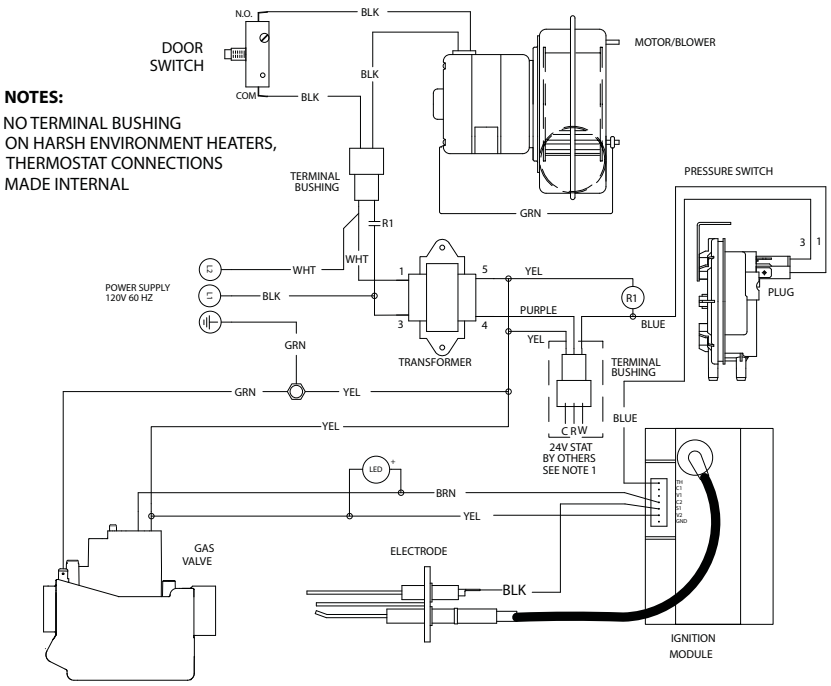

10.5 Ladder Diagram

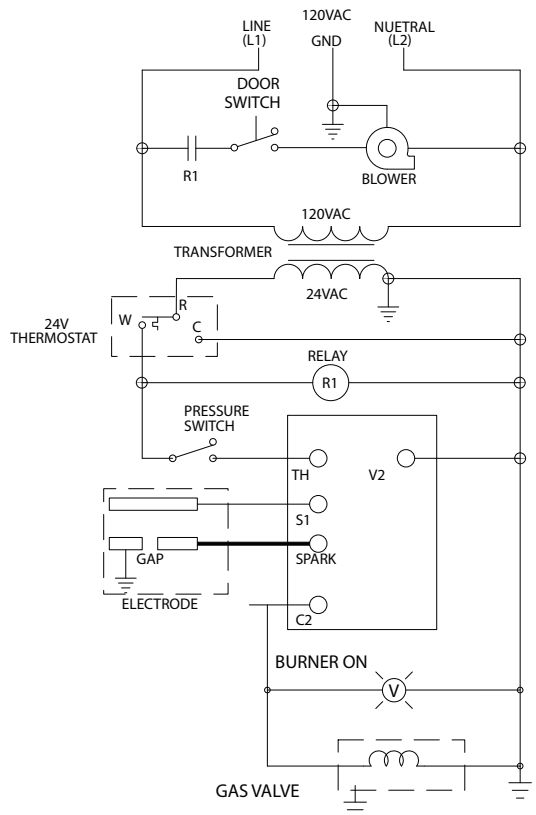

10.6 Electrical Connection to the Burner Box using Line Voltage Thermostat on Control

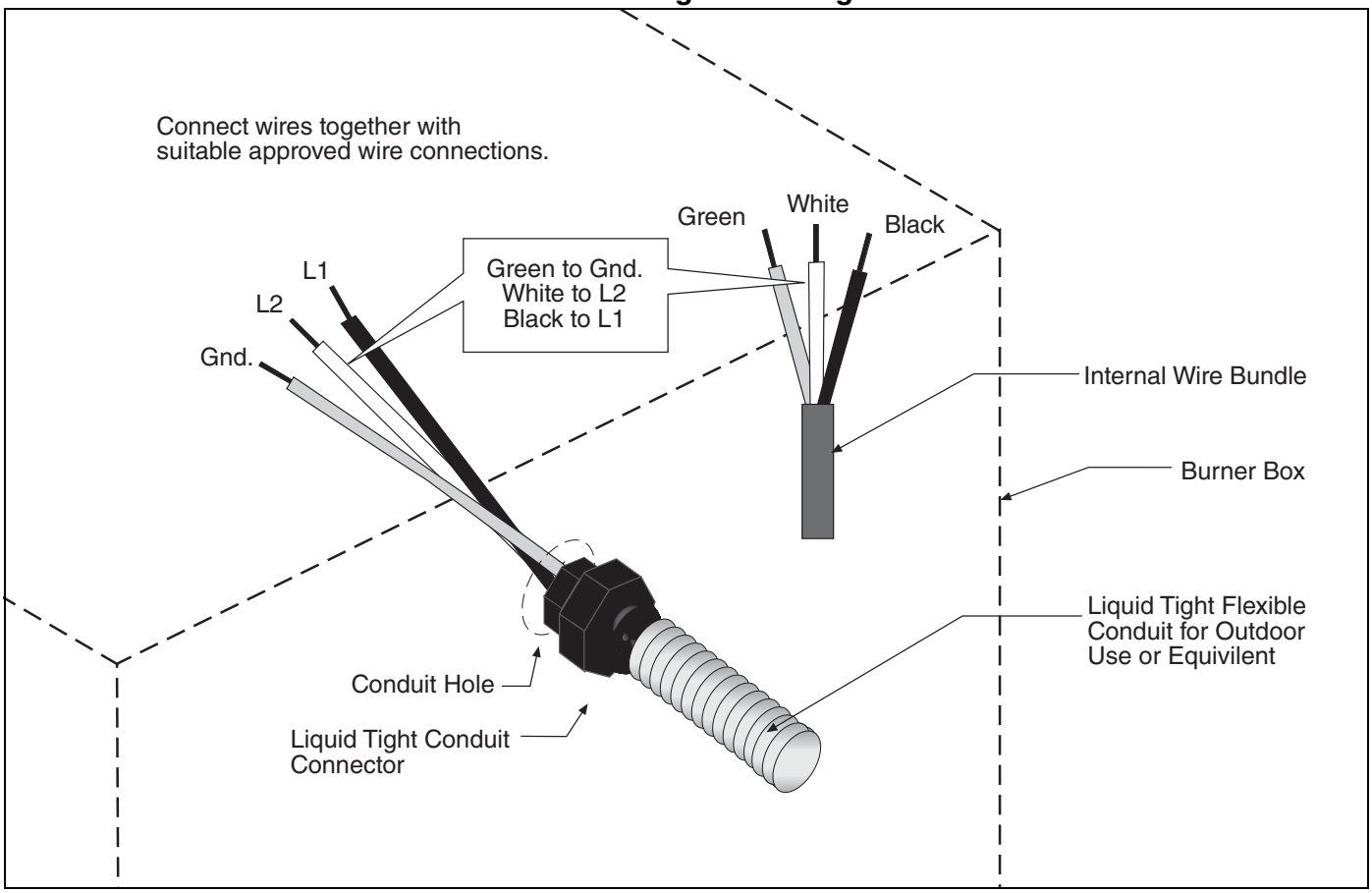

10.7 Electrical Connection to Burner Box using Low Voltage Thermostat on Control

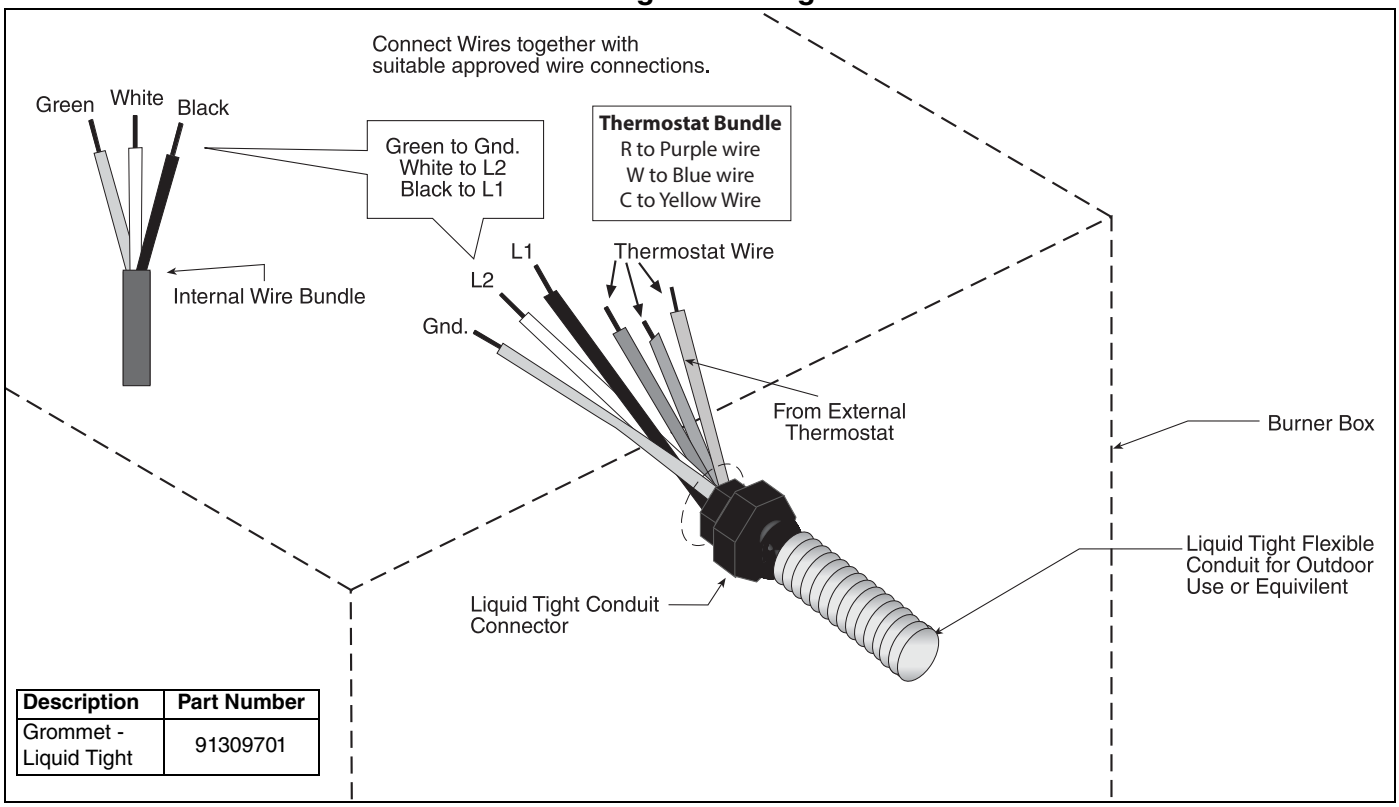

Description	Part Number
Grommet - Liquid Tight	91309701

SECTION 11: OPERATION AND MAINTENANCE

⚠ DANGER	⚠ WARNING		
			
Electrical Shock Hazard **Disconnect electric before service.** **Heater must be connected to a properly grounded electrical source.**	**Explosion Hazard** **Turn off gas supply to heater before service.**	**Burn Hazard** **Allow heater to cool before service.** **Tubing may still be hot after operation.**	**Cut/Pinch Hazard** **Wear protective gear during installation, operation and service.** **Edges are sharp.**
Failure to follow these instructions can result in death, electric shock, injury or property damage.			

This heater is equipped with a direct spark ignition system.

11.1 Sequence of Operation

4. Turn the thermostat up. When the thermostat calls for heat, the blower motor will energize.
5. When the motor approaches nominal running RPM, the pressure switch closes and activates the ignition module.
6. After a 45 second prepurge, the ignition module then opens the gas valve and energizes the spark igniter.
7. When the flame is established, the sparking sequence ceases.
8. If the flame is not established during the ignition sequence, the ignition module closes the gas valve and purge begins. Module will try 2 additional times for ignition (with purges in between trials). If ignition is not established, the module will lockout.
9. If the flame extinguishes during operation, the ignition module will attempt the multiple trial sequence described in step 5. If ignition is not re-established, the module will lockout for one hour or until reset.
10. After lockout, the control can be reset by turning down thermostat for five seconds, and then raising it again to desired temperature, or by disconnecting power and then reconnecting.
11. When thermostat is satisfied, all power to the unit is shut off.

11.2 To Shut Off Heater

Set thermostat to lowest setting.

Turn OFF electric power to heater.

Turn OFF manual gas valve in the heater supply line.

11.3 To Start Heater

Turn gas valve and electric power OFF and wait five minutes for unburned gases to vent from heater.

Turn ON main gas valve.

Turn ON electric power.

Set thermostat to desired temperature. Burner should light automatically.

11.4 Pre-Season Maintenance and Annual Inspection

To ensure your safety and years of trouble-free operation of the heating system, service and annual inspections must be done by a contractor qualified in the installation and service of gas-fired heating equipment.

Turn off gas and electric supplies before performing service or maintenance. Allow heater to cool before servicing.

Before every heating season, a contractor qualified in the installation and service of gas-fired heating equipment must perform a thorough safety inspection of the heater.

For best performance, the gas, electrical, thermostat connections, tubing, venting, suspensions and over-

all heater condition should be thoroughly inspected.

NOTE: Gas flow and burner ignition are among the first things that should be inspected.

Please *see Page 53, Section 11.5* for suggested items to inspect.

11.5 Maintenance Checklist

Installation Code and Annual Inspections:
All installation and service of ROBERTS GORDON® equipment must be performed by a contractor qualified in the installation and service of equipment sold and supplied by Roberts-Gordon LLC and conform to all requirements set forth in the ROBERTS GORDON® manuals and all applicable governmental authorities pertaining to the installation, service, operation and labeling of the equipment.

To help facilitate optimum performance and safety, Roberts-Gordon LLC recommends that a qualified contractor conduct, at a minimum, annual inspections of your ROBERTS GORDON® equipment and perform service where necessary, using only replacement parts sold and supplied by Roberts-Gordon LLC

The Vicinity of the Heater	Do not store or use flammable objects, liquids or vapors near the heater. Immediately remove these items if they are present. *See Page 5, Section 3*.
Vehicles and Other Objects	Maintain the clearances to combustibles. Do not hang anything from, or place anything on, the heater. Make sure nothing is lodged underneath the reflector, in between the tubes or in the decorative or protective grilles (included with select models). Immediately remove objects in violation of the clearances to combustibles. *See Page 5, Section 3*.
Reflector	Support reflector with reflector hanger and support strap. Reflector must not touch tube. Make sure there is no dirt, sagging, cracking or distortion. Do not operate if there is sagging, cracking or distortion. Make sure reflectors are correctly overlapped. *See Page 25, Section 6.6.1*. Clean outside surface with a damp cloth.
Vent Pipe	Venting must be intact. Using a flashlight, look for obstructions, cracks on the pipe, gaps in the sealed areas or corrosion. The area must be free of dirt and dust. Clean as required. Remove any carbon deposits or scale using a wire brush. *See Page 38, Section 8*.
Outside Air Inlet	Inlet must be intact. Look for obstructions, cracks on the pipe, gaps in the sealed areas or corrosion. The area must be free of dirt and dust. Clean and reinstall as required.
Tubes	Make sure there are no cracks. Make sure tubes are connected and suspended securely. *See Page 15, Section 6*. Make sure there is no sagging, bending or distortion. Clean or replace as required.
Gas Line	Check for gas leaks. *See Page 46, Section 9*.
Burner Observation Window	Make sure it is clean and free of cracks or holes. Clean and replace as required.

Blower Scroll, Wheel and Motor	Compressed air or a vacuum cleaner may be used to clean dust and dirt.
Burner Cup and Orifice	Clear of obstructions (even spider webs will cause problems). Carefully remove any dust and debris from the burner.
Electrode	Replace if there are cracked ceramics, excessive carbon residue, or erosion of the electrode. The electrode gap should be 1/8" (3.2 mm).
Thermostat	There should be no exposed wire or damage to the thermostat. *See Page 48, Section 10*.
Suspension Points	Make sure the heater is hanging securely. Look for signs of wear on the chain or ceiling. *See Page 16, Figure 15*.
Decorative and Protective Grille (optional)	The grille must be securely attached. Check that the side reflector extensions are installed correctly and secured in place if necessary. (Decorative grille only.) *See Page 34, Section 7.5 and Page 36, Section 7.6*. Make sure shield is installed correctly and secured in place if necessary. (Decorative grille only.) *See Page 35, Section 7.5.2*.
Lower Clearance Shield (optional)	The lower shield must be securely attached. Inspect shield support straps and lower clearance shield anchor points. *See Page 34, Section 7.4*. Make sure shield is installed correctly and secured in place if necessary. *See Page 34, Section 7.4*.
Wall Tag	If wall tag is present, make sure it is legible and accurate. Please contact Roberts-Gordon LLC or your ROBERTS GORDON® independent distributor, if you need a wall tag. *See Page 4, Section 2.1*.
Safety Labels	Product safety signs or labels should be replaced by the product user when they are no longer legible. Please contact Roberts-Gordon LLC or your ROBERTS GORDON® independent distributor to obtain replacement signs or labels. *See Page 2, Figure 1 through Page 3, Figure 2*.

SECTION 12: TROUBLESHOOTING

⚠ DANGER

Electrical Shock Hazard

Disconnect electric before service.

Heater must be properly grounded.

Failure to follow these instructions can result in death or electrical shock.

⚠ WARNING

			
Fire Hazard	**Explosion Hazard**	**Burn Hazard**	**Cut/Pinch Hazard**
Keep all flammable objects, liquids and vapors the minimum required clearances to combustibles away from heater. **Some objects will catch fire or explode when placed close to heater.**	**Turn off gas supply to heater before service.**	**Allow heater to cool before service.** **Tubing may still be hot after operation.**	**Wear protective gear during installation, operation and service.** **Edges are sharp.**
Failure to follow these instructions can result in death, injury or property damage.			

12.1 Troubleshooting Flow Chart

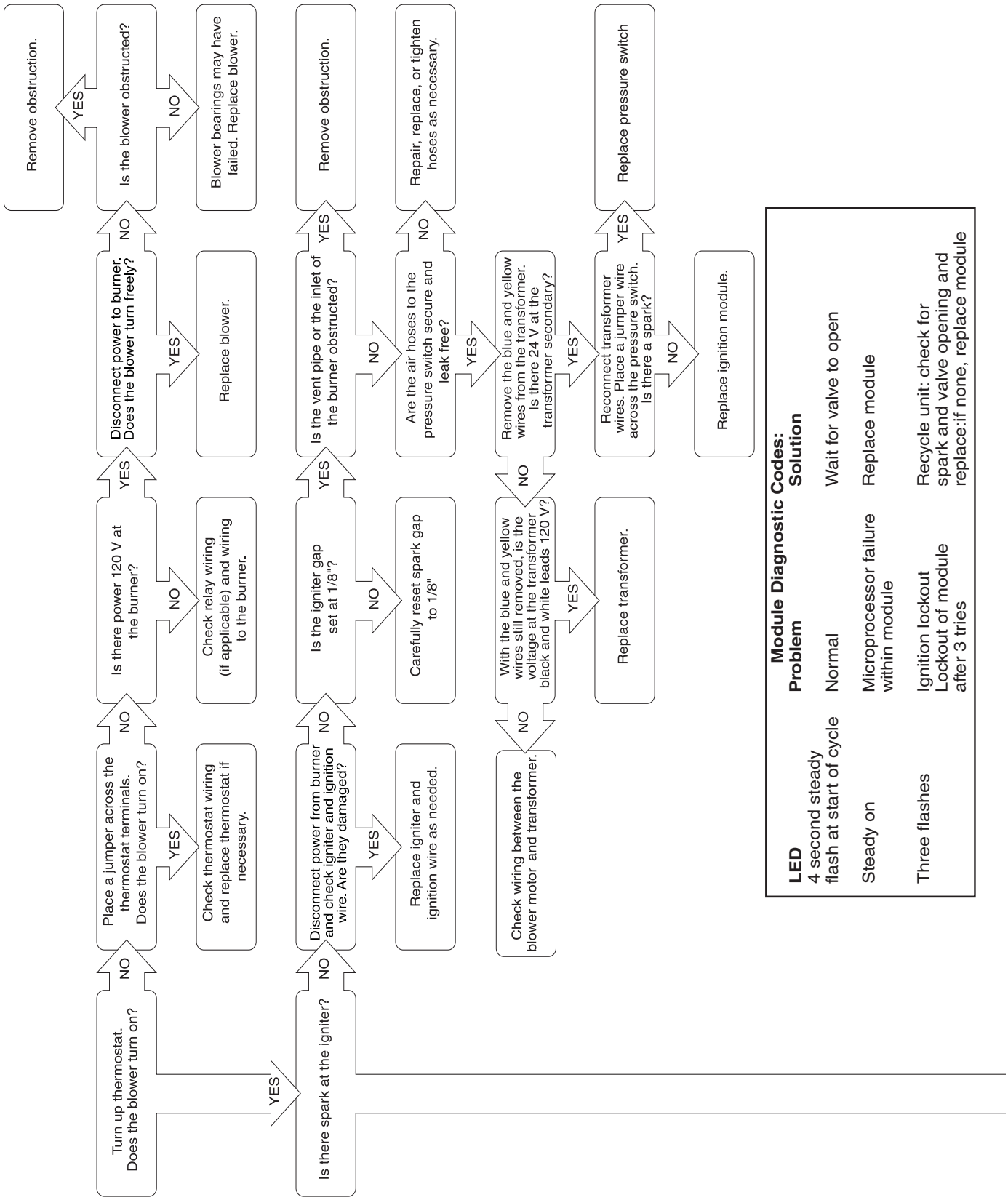

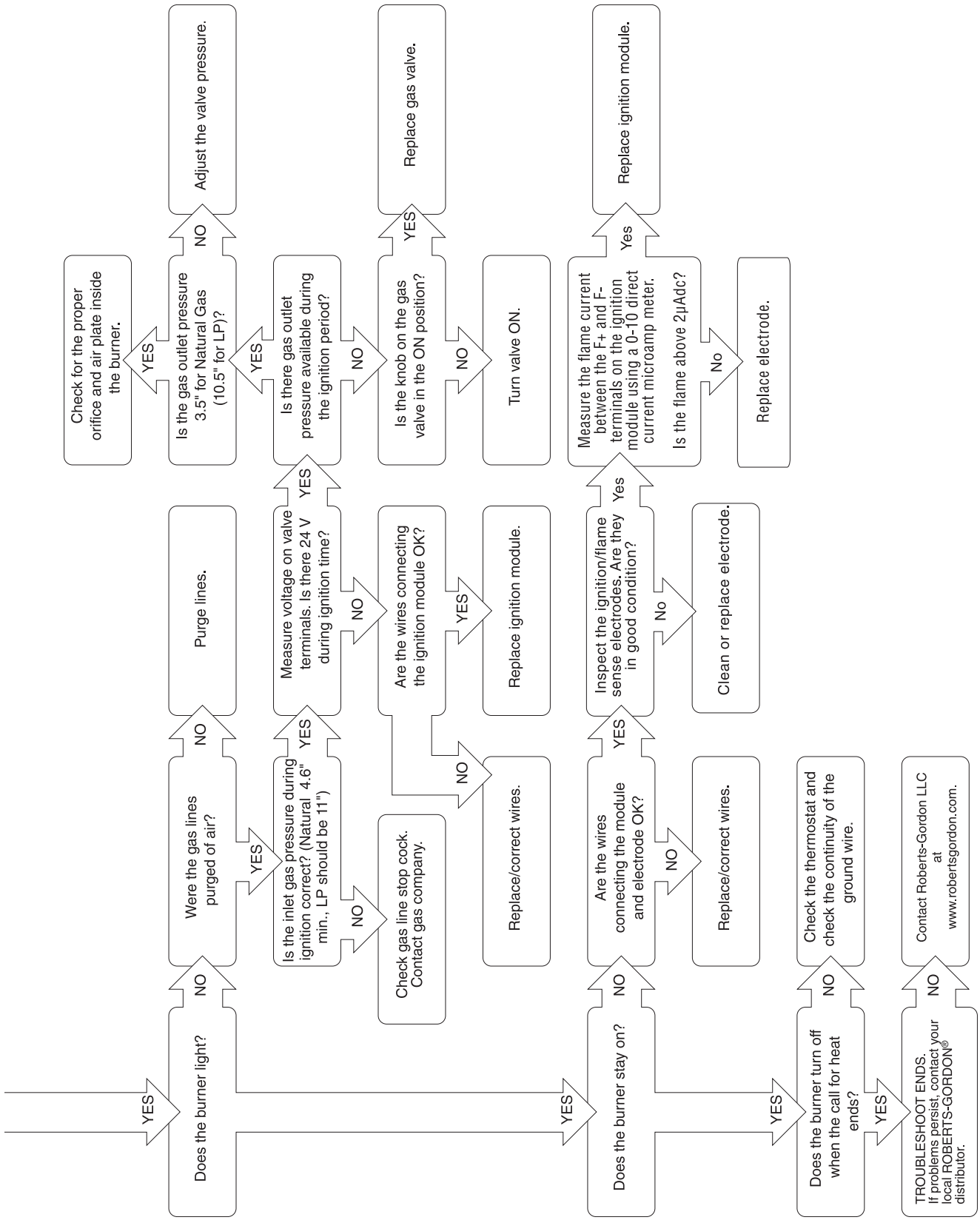
YES
Does the burner light?
NO
Were the gas lines purged of air?
NO
Purge lines.
YES
Is the inlet gas pressure during ignition correct? (Natural 4.6" min., LP should be 11")
NO
Check gas line stop cock. Contact gas company.
YES
Measure voltage on valve terminals. Is there 24 V during ignition time?
NO
Are the wires connecting the ignition module OK?
NO
Replace/correct wires.
YES
Replace ignition module.
YES
Is there gas outlet pressure available during the ignition period?
NO
Is the knob on the gas valve in the ON position?
NO
Turn valve ON.
YES
Replace gas valve.
YES
Is the gas outlet pressure 3.5" for Natural Gas (10.5" for LP)?
NO
Adjust the valve pressure.
YES
Check for the proper orifice and air plate inside the burner.
YES
Does the burner stay on?
NO
Are the wires connecting the module and electrode OK?
NO
Replace/correct wires.
YES
Inspect the ignition/flame sense electrodes. Are they in good condition?
No
Clean or replace electrode.
Yes
Measure the flame current between the F+ and F- terminals on the ignition module using a 0-10 direct current microamp meter.
Is the flame above 2µAdc?
No
Replace electrode.
Yes
Replace ignition module.
YES
Does the burner turn off when the call for heat ends?
NO
Check the thermostat and check the continuity of the ground wire.
YES
TROUBLESHOOT ENDS.
If problems persist, contact your local ROBERTS-GORDON® distributor.
NO
Contact Roberts-Gordon LLC at www.robertsgordon.com.

12.2 Manifold Gas Pressure Setting

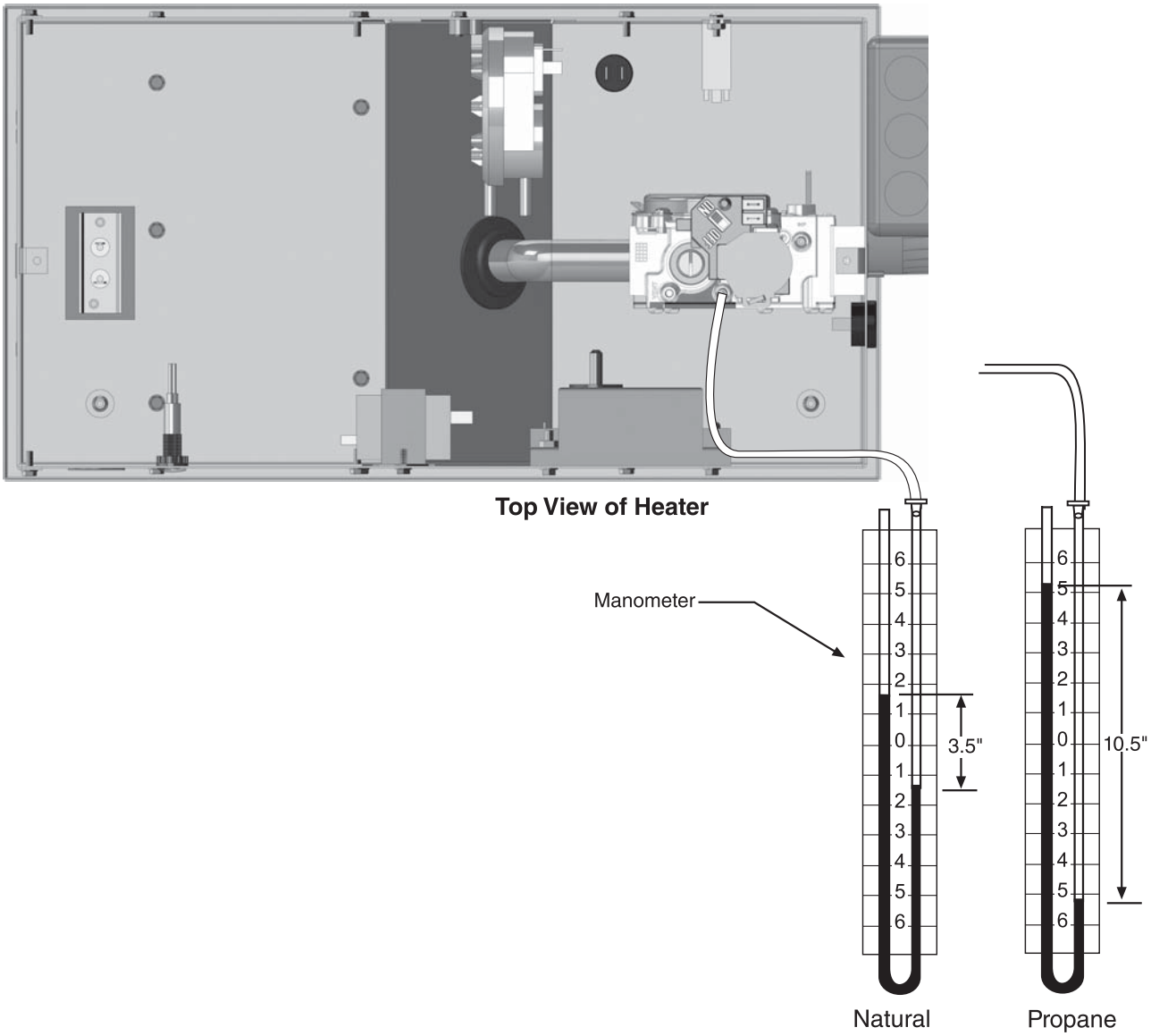

SECTION 13: REPLACEMENT PARTS

⚠ DANGER	⚠ WARNING		
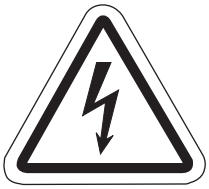			
Electrical Shock Hazard	**Explosion Hazard**	**Fire Hazard**	**Carbon Monoxide Hazard**

Use only genuine ROBERTS GORDON® replacement parts per this installation, operation and service manual.

Failure to follow these instructions can result in death, electric shock, injury or property damage.

See warnings and important information before removing or replacing parts. After any maintenance or repair work, always test fire the heater in accordance with the start-up instructions *on Page 52, Section 11* to help ensure all safety systems are in working order before leaving the heater to operate. Minor faults may be traced by using the troubleshooting charts *on Page 55, Section 12 through Page 58, Figure 12.2.*

FIGURE 27: Burner Exploded View

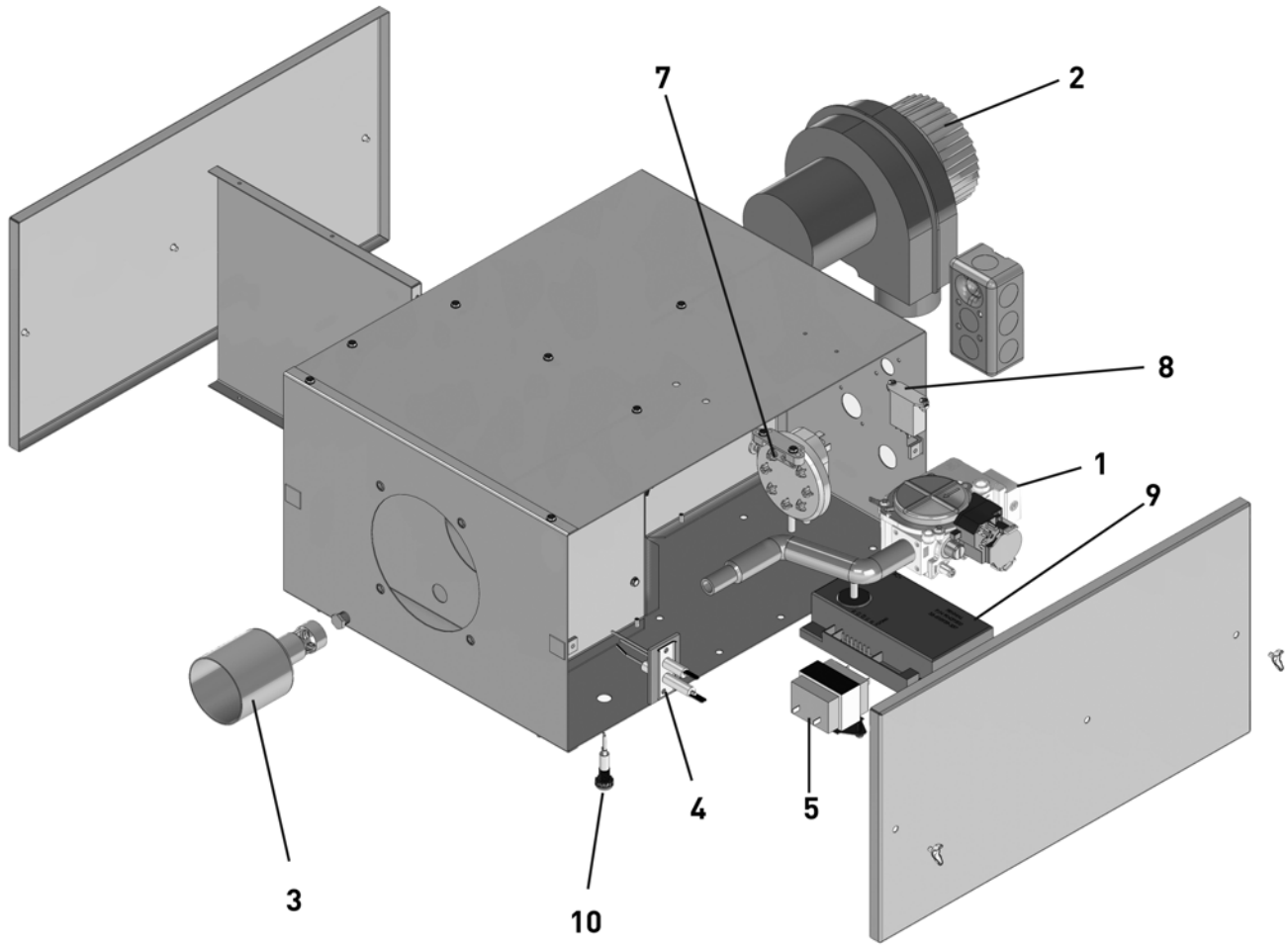

	Description	Part Number
1	Gas Valve (Natural)	90032510
1	Gas Valve (LP)	90032512
	Tube Gasket (Not Shown)	02568200
	Blower Inlet Gasket (Not Shown)	03050900
2	Motor and Blower Assembly	90708600-P
	Air Adapter Collar	91911704
	Combustion Air Weather Vent (Not Shown)	03700009
3	Burner Cup Assembly	03020100
4	Electrode Assembly	90427400
	Mica Window Assembly (Not Shown)	02553203
5	Transformer	90436900K
7	Pressure Switch:	
	(175)	90439802K
	(100)	90439803K
	(40, 60, 125)	90439805K
	(80, 150)	90439810K
8	24 Vac Relay	90447140
9	DSI Ignition Module	90439500K
10	LED Burner Status Light	91316103

SECTION 14: GENERAL SPECIFICATIONS

14.1 Material Specifications

14.1.1 Reflectors

.024 Aluminum (Standard or High Efficiency Reflectors)
(optional .024 Stainless Steel Type 304, Standard Reflectors Only)

14.2 Heater Specifications

14.2.1 Ignition

Fully automatic, three-try, direct spark, electronic ignition control, 100% safety shut-off.

14.3 Suspension Specifications

Hang heater with materials with a minimum working load of 75 lbs (33 kg). *See Page 16, Figure 15*.

14.4 Controls Specifications

Time switches, thermostats, etc. can be wired into the electrical supply. External controls supplied as an optional extra.

General Specifications for the heaters are as follows:

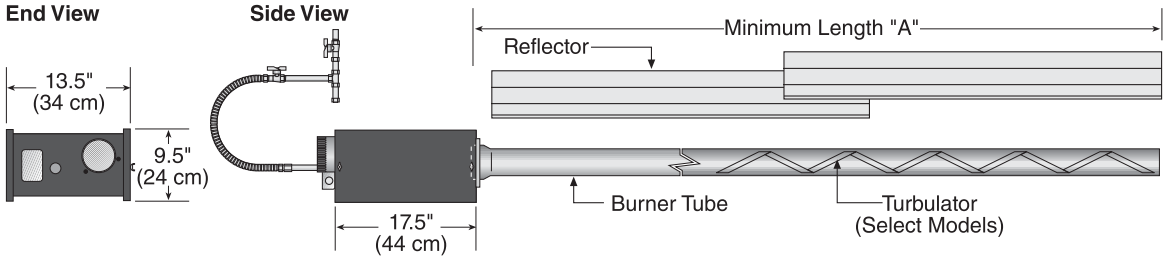

Model	Heat Input Rate (Btu/h) x (1000)	Length "A" Minimum	Recommended Minimum Mounting Height* Space	Spot
HEV-40	40	10' (3m)	8'-10' (2.4 - 3m)	8' (2.4m)
HEV-60	60	20' (6m)	10'-12' (3 - 3.6m)	9' (2.7m)'
HEV-80	80	20' (6m)	12'-15' (3.6 - 4.5m)	11' (3.3m)
HEV-100	100	30' (9m)	12'-15' (3.6 - 4.5m)	12' (3.7m)
HEV-125	125	40' (12m)	15'-20' (4.5 - 6m)	15' (4.6m)
HEV-150	150	50' (15m)	20'-25' (6 - 7.6m)	20' (6.1m)
HEV-175	175	60' (18m)	25' (7.6m)	23' (7m)

**See Page 5, Section 3* for clearances to combustibles.

GAS PRESSURE AT MANIFOLD:

Natural Gas: 3.5" wc
LP Gas: 10.5" wc

PIPE CONNECTION:

1/2" NPT (for 40, 60, 80, 100, 125)
3/4" NPT (for 150 & 175)

DIMENSIONS:

Vent Connection Size: 4" (10 cm)
Outside Air Connection Size: 4" (10 cm)
Refer to figure above for dimensional information.

GAS INLET PRESSURE:

Natural Gas:

for 40,60,80,100,125,150 4.6" wc Minimum
for 175 5.0" wc Minimum
14.0" wc Maximum

LP Gas: 11.0" wc Minimum
14.0" wc Maximum

ELECTRICAL RATING (ALL MODELS):

120 V - 60 Hz., 1.0 A

SECTION 15: THE ROBERTS GORDON® VANTAGE®HEV WARRANTY

ROBERTS-GORDON WILL PAY FOR:

Within 36 months from date of purchase by buyer or 42 months from date of shipment by Roberts-Gordon LLC (whichever occurs first), replacement parts will be provided free of charge for any part of the product which fails due to a manufacturing or material defect.

Roberts-Gordon LLC will require the part in question to be returned to the factory. Roberts-Gordon LLC will, at its sole discretion, repair or replace after determining the nature of the defect and disposition of part in question.

ROBERTS GORDON® Replacement Parts are warranted for a period of 12 months from date of shipment from Roberts-Gordon LLC or the remaining ROBERTS GORDON® VANTAGE®HEV warranty.

ROBERTS-GORDON WILL NOT PAY FOR:

Service trips, service calls and labor charges.

Shipment of replacement parts.

Claims where the total price of the goods have not been paid.

Damage due to:

- Improper installation, operation or maintenance.
- Misuse, abuse, neglect, or modification of the ROBERTS GORDON® VANTAGE® HEV in any way.
- Use of the ROBERTS GORDON® VANTAGE® HEV for other than its intended purpose.
- Incorrect gas or electrical supply, accident, fire, floods, acts of God, war, terrorism, or other casualty.
- Improper service, use of replacement parts or accessories not specified by Roberts-Gordon.
- Failure to install or maintain the ROBERTS GORDON® VANTAGE® HEV as directed in the Installation, Operation and Service manual.
- Relocation of the ROBERTS GORDON® VANTAGE® HEV after initial installation
- The use of the ROBERTS GORDON® VANTAGE® HEV in a corrosive atmosphere containing contaminants.
- The use of the ROBERTS GORDON® VANTAGE® HEV in the vicinity of a combustible or explosive material.
- Any defect in the ROBERTS GORDON® VANTAGE® HEV arising from a drawing, design, or specification supplied by or on behalf of the consumer.
- Damage incurred during shipment. Claim must be filed with carrier.

WARRANTY IS VOID IF:

The ROBERTS GORDON® VANTAGE® HEV is not installed by a contractor qualified in the installation and service of gas fired heating equipment.

You cannot prove original purchase date and required annual maintenance history.

The data plate and/or serial number are removed, defaced, modified or altered in any way.

The ownership of the ROBERTS GORDON® VANTAGE® HEV is moved or transferred. This warranty is nontransferable.

Roberts-Gordon is not permitted to inspect the damaged controller and/or component parts.

READ YOUR INSTALLATION, OPERATION AND SERVICE MANUAL

If you have questions about your controller, contact your installing professional. Should you need Replacement Parts or have additional questions, call or write:

Roberts-Gordon LLC
1250 William Street
P.O. Box 44
Buffalo, New York 14240-0044
Telephone: +1.716.852.4400
Fax: +1.716.852.0854
Toll Free: 800.828.7450
www.robertsgordon.com

Roberts-Gordon LLC's liability, and your exclusive remedy, under this warranty or any implied warranty (including the implied warranties of merchantability and fitness for a particular purpose) is limited to providing replacement parts during the term of this warranty. Some jurisdictions do not allow limitations on how long an implied warranty lasts, so this limitation may not apply to you. There are no rights, warranties or conditions, expressed or implied, statutory or otherwise, other than those contained in this warranty.

Roberts-Gordon LLC shall in no event be responsible for incidental or consequential damages or incur liability for damages in excess of the amount paid by you for the ROBERTS GORDON® VANTAGE® HEV**.** Some jurisdictions do not allow the exclusion or limitation of incidental or consequential damages, so this limitation or exclusion may not apply to you. This warranty gives you specific legal rights, and you may also have other rights which vary from jurisdiction to jurisdiction.

Roberts-Gordon shall not be responsible for failure to perform under the terms of this warranty if caused by circumstances out of its control, including but not limited to war, fire, flood, strike, government or court orders, acts of God, terrorism, unavailability of supplies, parts or power. No person is authorized to assume for Roberts-Gordon any other warranty, obligation or liability.

LIMITATIONS ON AUTHORITY OF REPRESENTATIVES:

No representative of Roberts-Gordon LLC, other than an Executive Officer, has authority to change or extend these provisions. Changes or extensions shall be binding only if confirmed in writing by Roberts-Gordon LLC's duly authorized Executive Officer.

ROBERTS GORDON®
INFRARED HEATING

OWNER WARRANTY REGISTRATION CARD

Mail or Fax to:
Roberts Gordon LLC •1250 William Street, P.O. Box 44 • Buffalo, NY 14240-0044 • Phone: 716-852-4400 • Fax: 716-852-0854
Toll Free: 800-828-7450 • www.robertsgordon.com

About the Owner:
Name:_____
Address:_____City:_____State:_____Zip Code:_____
Phone:_____ Fax:_____ E-mail:_____

About the Installer:
Name:_____
Address:_____City:_____State:_____Zip Code:_____
Phone:_____Fax:_____E-mail:_____

Purchased From (if different than installer):
Name:_____
Address:_____City:_____State:_____Zip Code:_____
Phone:_____ Fax:_____ E-mail:_____

About your Heater:
Model#:_____ Serial #:_____ Fuel:_____Installation Date:_____

Type of Installation (check one):

o Automotive	o Manufacturing	o Warehouse	o Recreational	o Aircraft
o Public Building	o Office	o Retail	o Agricultural	o Other_____

Installation Code and Annual Inspections: All installation and service of ROBERTS GORDON® equipment must be performed by a contractor qualified in the installation and service of equipment sold and supplied by Roberts-Gordon LLC and conform to all requirements set forth in the ROBERTS GORDON® manuals and all applicable governmental authorities pertaining to the installation, service, operation and labeling of the equipment.

To help facilitate optimum performance and safety, Roberts-Gordon LLC recommends that a qualified contractor conduct, at a minimum, annual inspections of your ROBERTS GORDON® equipment and perform service where necessary, using only replacement parts sold and supplied by Roberts-Gordon LLC.

These products are not for residential use.

This product is intended to assist licensed professionals in the exercise of their professional judgment.

©2017 Roberts-Gordon LLC - All rights reserved. No part of this work covered by the copyrights herein my be reproduced or copied in any form or by any means – graphic, electronic, or mechanical, including photcopying, recording, taping, or information storage and retrieval systems – without written permission of Roberts Gordon LLC. Printed in the U.S.A.

Attach this information to a wall near the ROBERTS GORDON® heater.

ROBERTS GORDON®
Infrared Heating

Read the Installation, Operation, and Service Manual thoroughly before installation, operation, or service.

Know your model number and installed configuration.

Model number and installed configuration are found on the burner and in the Installation, Operation and Service Manual.

Write the largest clearance dimensions with permanent ink according to your model number and configuration in the open spaces below.

OPERATING INSTRUCTIONS

1. STOP! Read all safety instructions on this information sheet.
2. Open the manual gas valve in the heater supply line.
3. Turn on electric power to the heater.
4. Set the thermostat to desired setting.

TO TURN OFF THE HEATER

1. Set the thermostat to off or the lowest setting.

IF THE HEATER WILL NOT OPERATE, TO ENSURE YOUR SAFETY, FOLLOW THESE INSTRUCTIONS TO SHUT DOWN YOUR HEATER

1. Set the thermostat to off or the lowest setting.
2. Turn off electric power to the heater.
3. Turn off the manual gas valve in the heater supply line.
4. Call your registered installer/contractor qualified in the installation and service of gas-fired heating equipment.

⚠ WARNING

Fire Hazard

Keep all flammable objects, liquids and vapors the minimum required clearances to combustibles away from heater.

Some objects will catch fire or explode when placed close to heater.

Failure to follow these instructions can result in death, injury or property damage.

Maintain_____clearance to the side and _____ clearance below the heater from vehicles and combustible materials.

Roberts-Gordon LLC
1250 William Street
P.O. Box 44
Buffalo, NY 14240-0044 USA
Telephone: +1.716.852.4400
Fax: +1.716.852.0854
Toll Free: 800.828.7450

Installation Code and Annual Inspections:
All installation and service of ROBERTS GORDON® equipment must be performed by a contractor qualified in the installation and service of equipment sold and supplied by Roberts-Gordon and conform to all requirements set forth in the ROBERTS GORDON® manuals and all applicable governmental authorities pertaining to the installation, service, operation and labeling of the equipment. To help facilitate optimum performance and safety, Roberts-Gordon recommends that a qualified contractor conduct, at a minimum, annual inspections of your ROBERTS GORDON® equipment and perform service where necessary, using only replacement parts sold and supplied by Roberts-Gordon.

Further Information: Applications, engineering and detailed guidance on systems design, installation and equipment performance is available through ROBERTS GORDON® representatives. Please contact us for any further information you may require, including the Installation, Operation and Service Manual.

This product is not for residential use.

© 2017 Roberts-Gordon LLC All rights reserved. No part of this work covered by the copyrights herein may be reproduced or copied in any form or by any means – graphic, electronic, or mechanical, including photocopying, recording, taping, or information storage and retrieval systems – without written permission of Roberts-Gordon LLC.

www.robertsgordon.com P/N 91037912 Rev. K