ROBERTS GORDON

CoRayVac®

Custom-Engineered, Low-Intensity Infrared Heating Systems

Submittal: CRV-Series

Job: _____
Location: _____
Engineer: _____
Gas Specs: _____
Date: _____

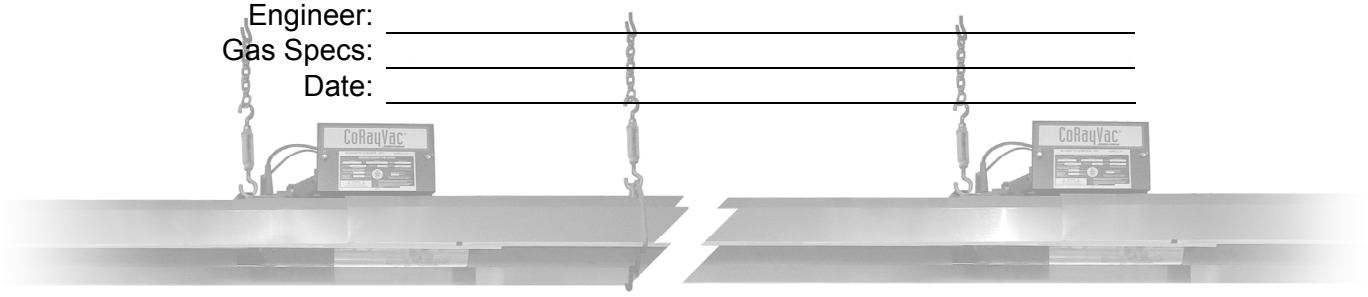

QTY.	_____	MODEL NO. CRV	_____	UNIT INPUT	_____	BTU/HR
QTY.	_____	MODEL NO. CRV	_____	UNIT INPUT	_____	BTU/HR
QTY.	_____	MODEL NO. CRV	_____	UNIT INPUT	_____	BTU/HR
QTY.	_____	MODEL NO. CRV	_____	UNIT INPUT	_____	BTU/HR

TOTAL INPUT _____ BTU/HR _____

Important

Before installation and operation of heating equipment, read and understand the current Installation, Operation and Service Manual.

Applications, engineering and detailed guidance on systems design, installation and equipment performance are available upon request. ROBERTS GORDON® equipment is to be installed only in accordance with local laws, codes and regulations, and only by a contractor qualified in the installation and service of gas-fired heating equipment.

Roberts-Gordon LLC
1250 William Street
P.O. Box 44
Buffalo, New York 14240-0044
Telephone: +1.716.852.4400
Fax: +1.716.852.0854
Toll Free: 800.828.7450
www.robertsgordon.com
www.rg-inc.com
www.corayvac.com
www.radiantheaters.com

P/N127602NA Rev C 06/13

ROBERTS GORDON®

UltraVac™

Controls for Modulating CORAYVAC® Infrared Heating Systems

Submittal: ULTRAVAC™ (Optional)

Job:	
Location:	
Engineer:	
Gas Specs:	
Date:	

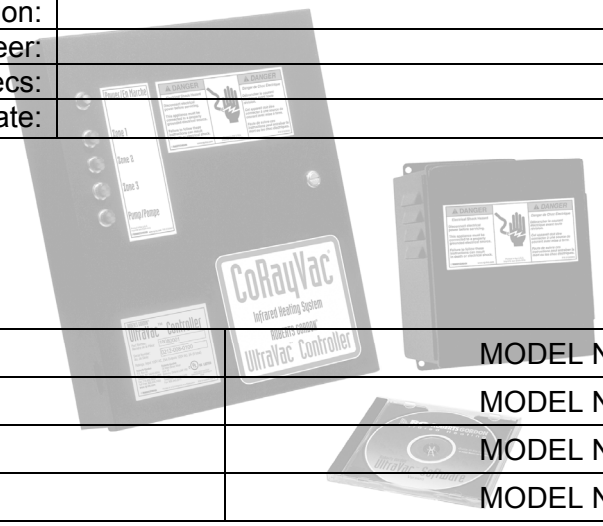

QTY.		MODEL NO.
QTY.		MODEL NO.
QTY.		MODEL NO.
QTY.		MODEL NO.

Important

Before installation and operation of heating equipment, read and understand the Installation, Operation and Service Manual.

Applications, engineering and detailed guidance on systems design, installation and equipment performance are available upon request. ROBERTS GORDON® equipment is to be installed only in accordance with local laws, codes and regulations, and only by a contractor qualified in the installation and service of gas-fired heating equipment.

DESIGN CERTIFIED®

CERTIFIED®

Roberts-Gordon LLC
1250 William Street
P.O. Box 44
Buffalo, New York 14240-0044
Telephone: +1.716.852.4400
Fax: +1.716.852.0854
Toll Free: 800.828.7450
www.robertsgordon.com
www.rg-inc.com
www.corayvac.com
www.radiantheaters.com

P/N 10081602NA 06/13

LIST OF CONTENTS

There are references in this manual to various trademarks. All trademarks mentioned herein, whether registered or not, are the property of their respective owners. Roberts-Gordon LLC is not sponsored by or affiliated with any of the trademark or registered trademark owners, and make no representations about them, their owners, their products or services. Roberts-Gordon LLC is not sponsored by or affiliated with BACnet®, LonWorks® or Modbus®.

BEFORE INSTALLATION AND OPERATION OF HEATING EQUIPMENT, READ AND UNDERSTAND THE CURRENT INSTALLATION, OPERATION AND SERVICE MANUAL. APPLICATIONS, ENGINEERING AND DETAILED GUIDANCE ON SYSTEMS DESIGN, INSTALLATION AND EQUIPMENT PERFORMANCE ARE AVAILABLE UPON REQUEST. ROBERTS GORDON® EQUIPMENT IS TO BE INSTALLED ONLY IN ACCORDANCE WITH LOCAL LAWS, CODES AND REGULATIONS, AND ONLY BY A CONTRACTOR QUALIFIED IN THE INSTALLATION AND SERVICE OF GAS-FIRED HEATING EQUIPMENT.

Printed in the U.S.A.

LIST OF CONTENTS

BEFORE INSTALLATION AND OPERATION OF HEATING EQUIPMENT, READ AND UNDERSTAND THE CURRENT INSTALLATION, OPERATION AND SERVICE MANUAL. APPLICATIONS, ENGINEERING AND DETAILED GUIDANCE ON SYSTEMS DESIGN, INSTALLATION AND EQUIPMENT PERFORMANCE ARE AVAILABLE UPON REQUEST. ROBERTS GORDON® EQUIPMENT IS TO BE INSTALLED ONLY IN ACCORDANCE WITH LOCAL LAWS, CODES AND REGULATIONS, AND ONLY BY A CONTRACTOR QUALIFIED IN THE INSTALLATION AND SERVICE OF GAS-FIRED HEATING EQUIPMENT.

Printed in the U.S.A.

STANDARD PARTS LIST

Contents of CRV-Series Burner Carton

Part No.	Description
0270XXXX	Burner (Rate and Fuel Varies)
*91412200	Flexible Stainless Steel Gas Hose, 1/2" NPT (US models only)
013676XX	End Vent Plate
01397300	Accessory Package
01361200	Filter Support Disk
01367800	Combustion Chamber Gasket
02724901	Door Assembly w/ Hole
91115100	Screw #10 - 24 x 5/8
91119500	U-Clip
91905500	Filter Support
92123900	Nut 5/16 - 18
92511601	Wing Nut #10 - 24
96411600	Lock Washer 5/16"
01312401	Filter and Gasket

* Canadian Models: Rubber (Type 1) Gas Hoses available as an accessory.

Common CRV-Series Components

Part No.	Description
Combustion Chambers	
02722300-1P	Hot Rolled Steel Combustion Chamber
02722301-1P	Heat-Treated Aluminized Steel Combustion Chamber
0272230D-1P	Porcelain Coated Steel Combustion Chamber
02721200-1P	Cast Iron Combustion Chamber

Part No.	Description
Tubing and Related Accessories	
01312700	Coupling, 4" (10 cm) Plain
01312706	Coupling, 6" (15 cm) Plain
0131270I	Coupling, 4" (10 cm) Lined
01331900	Coupling, 4" (10 cm) Damper
E0009356	Coupling, 6" (15 cm) Damper
0133022D	Tee, 4" (10 cm) Coated
01330203	Tee, 4" (10 cm) Aluminized
01330204	Tee, 6" (15 cm) Aluminized
0133092D	Cross, 4" (10 cm) Coated
01330903	Cross, 4" (10 cm) Aluminized
01330904	Cross, 6" (15 cm) Aluminized
01335801	Elbow, 4" (10 cm) Aluminized 90°
T0100320	Elbow, 6" (15 cm) Aluminized 90°
0133580D	Elbow, 4" (10 cm) Coated 90°
01336101	Elbow, 4" (10 cm) Aluminized 45°
0133610D	Elbow, 4" (10 cm) Coated 45°
91409300	Tube, Hot Rolled Steel 4" (10 cm) dia 10' (3 m)
91409403	Tube, Non-Heat Treated Aluminized 4" (10 cm) dia 10' (3 m)
91409408	Tube, Heat Treated Aluminized 4" (10 cm) dia 10' (3 m)
91409420	Tube, Non-Heat Treated Aluminized 6" (15 cm) dia 10' (3 m)
9141030D	Tube, Coated 4" (10 cm) dia 10' (3 m)
E0009105	Tube, Heat Treated Aluminized 6" (15 cm) dia 10' (3 m)

Part No.	Description
91418200	Tube Adapter, Aluminized 6" (15 cm) dia x 4" (10 cm) dia
02722100	Adapter, 4" (10 cm) Cast Iron
02726000K	Lower Tube Temperature Insert
91240010	Tube Hanger, 6" (15 cm)
91308001	High Temperature Pipe Compound, 1lb. can

Part No.	Description
Venting Accessories	
01324401	Outside Air Supply Takeoff, 4" (10 cm)
01326801	Outside Air Filter Housing
90707501	Air Supply Blower/Power Venter
91409601	Outside Air Flex Duct, 4" (10 cm) (Box of 8 - 8' [2.4 m] sections)

Part No.	Description
Reflectors and Related Accessories	
01329910	Reflector Side Extension Support
03050010	Reflector Support Package (Tubing)
02712700	Reflector Side Extension, 2 Clips, 2 Screws
02716400	Reflector Support Package (Schedule 40 Pipe)
02750303	Reflector, Aluminum
027503SS	Reflector, Stainless Steel
02750304	Reflector, Aluminum with Hole
027503SH	Reflector, Stainless Steel with Hole
02750800	Reflector End Cap, Aluminum
027508SS	Reflector End Cap, Stainless Steel
027508SH	Reflector End Cap, Stainless Steel with Hole
02750900	Reflector Joint
027509SS	Reflector Joint, Stainless Steel
027127SS	Reflector Side Extension, Stainless Steel
03090100	Tube and Reflector Hanger
02790300	Tube and Reflector Hanger, Cast Iron
91907302	S-Hook
91903201	Turnbuckle
91903300	Spring Hook
91903202	Turnbuckle with Eyebolt
02712100	Universal Shield Support
02751800	Universal Shield with Holes
02751801	Universal Shield
027518SS	Universal Shield, Stainless Steel

Part No.	Description
Control Packages and Accessories	
10001501	Water Resistant Sensor
02770002	System Control
ULTRAVAC™ Control Packages	
URVCCM	ROBERTS GORDON® ULTRAVAC™ Central Controller (with Modem Chip & Software) Includes:
URVSC	ROBERTS GORDON® ULTRAVAC™ Controller
10080142	Modem Chip
10080450	Comms Equalization Cable
10081501	Outdoor Sensor
10080410	PC Connection Cable Package

URVCCR	ROBERTS GORDON® ULTRAVAC™ Central Controller (with RS-485 Converter & Software) Includes:
Part No.	**Description**
URVSC	ROBERTS GORDON® ULTRAVAC™ Controller
10080142	Modem Chip
10080450	Comms Equalization Cable
10080430	RS-485 Converter with 9 V Power Supply
10081501	Outdoor Sensor
10080410	PC Connection Cable Package
URVCCL	ROBERTS GORDON® ULTRAVAC™ Central Controller (with TCP/IP Communication Module & Software) Includes:
URVSC	ROBERTS GORDON® ULTRAVAC™ Controller
10080142	Modem Chip
10080450	Comms Equalization Cable
10080440	TCP/IP Communication Module
10081501	Outdoor Sensor
10080410	PC Connection Cable Package
URVBNC	Controller, ROBERTS GORDON® ULTRAVAC™ BACnet®
URVSC	Controller, ROBERTS GORDON® ULTRAVAC™, 1 Pump 3 Zones (Satellite Control)
URVU	Controller, ROBERTS GORDON® ULTRAVAC™, Unitary
Variable Frequency Drive Assemblies	
VFD75115	VFD Assembly, .75 HP, 115 V, 1 Ø Input
VFD75230	VFD Assembly, .75 HP, 230 V, 1 Ø Input
VFD20230	VFD Assembly, 2 HP, 230 V, 1 Ø Input
VFD75115N4	VFD Assembly, .75 HP, 115 V, 1 Ø Input, NEMA 4
VFD75230N4	VFD Assembly, .75 HP, 230 V, 1 Ø Input, NEMA 4
VFD75460	VFD Assembly, .75 HP, 460 V, 3 Ø Input
VFD75460N4	VFD Assembly, .75 HP, 460 V, 3 Ø Input, NEMA 4
VFD20230N4	VFD Assembly, 2 HP, 230 V, 1 Ø Input, NEMA 4
VFD20460	VFD Assembly, 2 HP, 460 V, 3 Ø Input
VFD20460N4	VFD Assembly, 2 HP, 460 V, 3 Ø Input, NEMA 4
ULTRAVAC™ Accessories	
10080142	Modem, Plug-In Chip
10080410	Cable Package, PC Connection
10080430	RS-485 Converter with 9V Power Supply
10080440	TCP/IP Communication Module
10081500	Sensor, Adjustable Indoor, Deg F, ROBERTS GORDON® ULTRAVAC™ Controller
10081501	Sensor, Outdoor, ULTRAVAC™
10081502	Sensor, Adjustable Indoor, Deg C, ULTRAVAC™
90602450	Voltage Surge Suppressor 277/480 V
90602451	Voltage Surge Suppressor 120 V
90602452	Voltage Surge Suppressor 120/240 V 1 Ø 60 Hz
90602460	Line Reactor 480 V 3 Ø 60 Hz w/Enclosure (Output)
90602461	Line Reactor 230 V 3 Ø 60 Hz .75 HP (Output)
90602462	Line Reactor 230 V 3 Ø 60 Hz 2 HP (Output)
90602470	Line Reactor 480 V 3 Ø 60 Hz 4 A w/Enclosure (Input)

Part No.	Description
Thermostats	
05023000	Load Relay Package
90417600K	Transformer Relay - SPST (12 A)
90436300	Transformer Relay - SPDT (12 A)
90423000	24 V Low Voltage Thermostat (Marked 1-5)
90424300	Thermostat Guard
Part No.	**Description**
90425104	Thermostat, Modulating LonWorks®
90425105	Thermostat, Modulating
90425109	Thermostat, Modulating BACnet®
90429107	Thermostat, On/Off BACnet®
10081520	Sensor, Remote Modulating
10081521	Sensor, Outdoor Modulating

Part No.	Description
Deco Grille (2' x 4' [.6 m x 1.2 m])	
01365900	Shield Frame
01370408	Reflector Side Extension 8" x 48" (20.3 cm x 122 cm)
01370412	Reflector Side Extension 12" x 48" (30.5 cm x 122 cm)
01370416	Reflector Side Extension 16" x 48" (40.6 cm 122 cm)
91407000	Grille, Aluminum 2' x 4' (.6 m x 1.2 m)
Part No.	**Description**
Protective Grille	
08050001	Protective Grille, 40" (1 m)
08050002	Protective Grille End Cap

Part No.	Description
Shields	
02750303	Barrier Shield
02751801	Universal Shield
027518SS	Universal Shield, Stainless Steel
02751800	Universal Shield with Holes

Part No.	Description
Pump Packages and Accessories	
02719105	EP-100 Pump Package
02719100	EP-100 Pump
02724700	Accessory Package
02716305	EP-201 Pump Package
01312001	EP-201 Pump
01317805	Accessory Package
02712034	EP-203 Pump Package
01312002	EP-203 Pump
01317805	Accessory Package
02723014	EP-301 Pump Package 4"
02730101	EP-301 Pump Assembly
02730104	Accessory Package
02723016	EP-301 Pump Package 6"
02730101	EP-301 Pump Assembly
02730106	Accessory Package
02723034	EP-303 Pump Package 4"
02730103	EP-303 Pump Assembly
02730104	Accessory Package
02723036	EP-303 Pump Package 6"
02730103	EP-303 Pump Assembly
02730106	Accessory Package

Part No.	Description
Pump Accessories	
90430600K	Pressure Switch
01327001	Condensate Check Valve Assembly
02718851	Drain Cap, 4" (10 cm)
02718852	Drain Cap, 6" (15 cm)
01327002	Condensate Neutralization Tube 200
01327003	Condensate Neutralization Tube 600
01327004	Condensate Neutralization Tube 1000
01327005	Condensate Neutralization Tube 2000
01327007	Refill, Condensate Neutralization Tube 600
01327008	Refill, Condensate Neutralization Tube 1000
01327009	Refill, Condensate Neutralization Tube 2000

Part No.	Description
Contactors	
10050011	Contactor, 120 Vac for EP-203, EP-303, 3 Ø EP-100, EP-201 208/230 V, 1 Ø EP-301 208/230 V, 1 Ø
10050012	Contactor, 120 Vac for EP-301, 120 V, 1 Ø

GENERAL SPECIFICATIONS

Material

Reflectors

.024 Aluminium (Optional - 024 Stainless Steel Type 304).

Heater

Ignition

Fully Automatic, Three-Try, Direct Spark, Electronic Ignition Control, 100% Safety Shut-Off.

Suspension

Hang heater with materials with a minimum working load of 75 lbs (33 kg).

Controls

Time switches, thermostats, etc. can be wired into the electrical supply. External controls supplied as an option.

General Specifications for CRV-Series heaters are as follows:

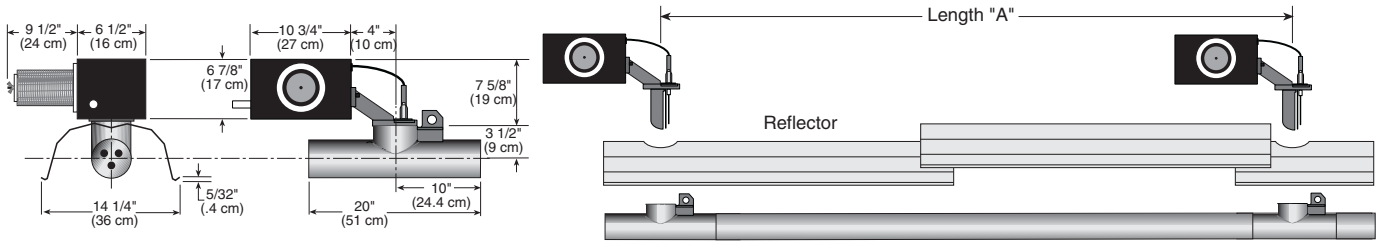

Model	Heat Input Rate (Btu/h) x (1000)	Length "A" Minimum	Length "A" Maximum	Recommended Minimum Mounting Height Spot Heating
CRV-B-2 (NG only)	20	10' (3 m)	20' (6.1 m)	8' (2.4 m)
CRV-B-4	40	12.5' (3.8 m)	25' (7.6 m)	8' (2.4 m)
CRV-B-6	60	20' (6.1 m)	35' (10.7 m)	8' (2.4 m)
CRV-B-8	80	20' (6.1 m)	45' (13.7 m)	10' (3 m)
CRV-B-9	90	25' (7.6 m)	50' (15.2 m)	10' (3 m)
CRV-B-10	100	30' (9.1 m)	60' (18.3 m)	15' (4.5 m)
CRV-B-12A (NG only)	110	35' (10.7 m)	70' (21.3 m)	15' (4.5 m)
CRV-B-12 (LP only)	120	35' (10.7 m)	70' (21.3 m)	15' (4.5 m)

PIPE CONNECTION:
1/2" NPT

DIMENSIONS:
Vent Connection Size: 4" (10 cm) or 6" (15 cm)
Outside Air Connection Size: 4" (10 cm)
Refer to figure above for dimensional information.

GAS INLET PRESSURE:
Natural Gas: 4.5" wc Minimum 14.0" wc Maximum
LP Gas: 10.5" wc Minimum 14.0" wc Maximum

ELECTRICAL RATING:
120 V - 60 Hz, 0.3 A

GENERAL SPECIFICATIONS FOR PUMPS

Pump Dimensional Data (in.)							
Model	**A**	**B**	**C**	**D**	**E**	**F**	**G**
EP-100	17	14.5	21	3.75	10	4	4
EP-201/203	17.75	17	20.25	3.25	10	4.5	4.5
EP-301/303	25.6	24.8	22.7	4.8	15.2	6	6

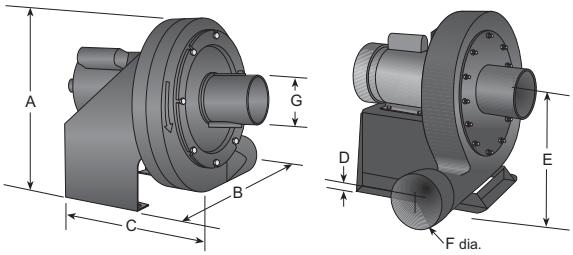

Pump Specifications

Model	EP-100	EP-201	EP-203	EP-301	EP-303
Horsepower (Hp)	1/3	3/4	3/4	2*	2*
Phase (Ø)	1	1	3	1	3
Hertz (Hz)	60	60	60	60	60
Voltage (V)	115/230	115/230	208-230/460	208-230	208-230/460
Full Load Amp (Amps)	4.8/2.4	6.6/3.3	2.4-2.2/1.1	12.8-11.5	5.5-5.2/2.6
R.P.M.	3450	3450	3500	3450	3450
Motor Frame	56	56	56	90	90
Motor Enclosure	TENV	TENV	TEFC	TEFC	TEFC
Noise Level @ 5' (DBA)	-	70	70	-	-
Inlet/Outlet (In.)	4/4	4/4	4/4	6/6	6/6
Weight (lbs.)	62	112	112	170	170

** For starter, see National Electric Code (NEC) requirement for motors 1 hp or higher.*

Air Supply Blower Specifications

Capacity	240 CFM @ 0.75 in wc
Power (W)	167
Phase	1
Hertz (Hz)	60
Voltage (V)	120
Full Load Amp (Amps)	1.5
R.P.M.	3000
Motor Enclosure	OPEN FC
Inlet/Outlet (In.)	5/5
Weight (lbs.)	10

CLEARANCES TO COMBUSTIBLES

NOTE: 1. All dimensions are from the surfaces of all tubes, couplings, elbows, tees and crosses.

2. Clearances B, C and D can be reduced by 50% after 25' (7.5 m) of tubing downstream from where the combustion chamber and the tube connect.

Standard Reflector

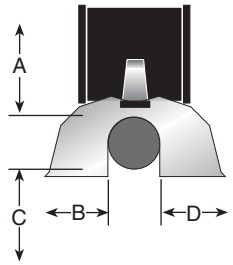

Model	(inches) A	B	C	D	(centimeters) A	B	C	D
CRV-B-2	4	20	48	20	11	51	122	51
CRV-B-4	4	20	48	20	11	51	122	51
CRV-B-6	4	20	48	20	11	51	122	51
CRV-B-8	4	20	48	20	11	51	122	51
CRV-B-9	4	36	60	36	11	92	153	92
CRV-B-10	4	36	60	36	11	92	153	92
CRV-B-12	4	36	60	36	11	92	153	92
CRV-B-12A	4	36	60	36	11	92	153	92

.

One Side Reflector

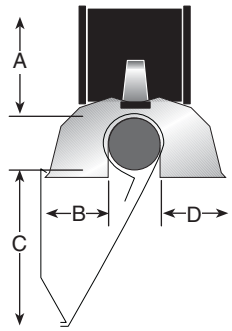

Model	(inches) A	B	C	D	(centimeters) A	B	C	D
CRV-B-2	4	12	56	20	11	31	143	51
CRV-B-4	4	12	56	20	11	31	143	51
CRV-B-6	4	12	56	20	11	31	143	51
CRV-B-8	4	12	56	20	11	31	143	51
CRV-B-9	4	12	60	42	11	31	153	107
CRV-B-10	4	12	60	42	11	31	153	107
CRV-B-12	4	12	60	42	11	31	153	107
CRV-B-12A	4	12	60	42	11	31	153	107

Two Side Reflectors

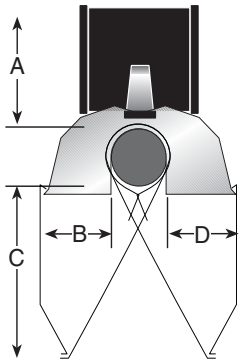

Model	(inches) A	B	C	D	(centimeters) A	B	C	D
CRV-B-2	4	12	56	12	11	31	143	31
CRV-B-4	4	12	56	12	11	31	143	31
CRV-B-6	4	12	56	12	11	31	143	31
CRV-B-8	4	12	56	12	11	31	143	31
CRV-B-9	4	12	60	12	11	31	153	31
CRV-B-10	4	12	60	12	11	31	153	31
CRV-B-12	4	12	60	12	11	31	153	31
CRV-B-12A	4	12	60	12	11	31	153	31

NOTE: 1. All dimensions are from the surfaces of all tubes, couplings, elbows, tees and crosses.
2. Clearances B, C and D can be reduced by 50% after 25' (7.5 m) of tubing downstream from where the combustion chamber and the tube connect.

Universal Shield, Position 1

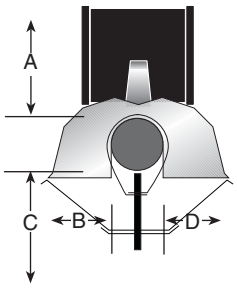

Model	(inches) A	B	C	D	(centimeters) A	B	C	D
CRV-B-2	4	12	12	12	11	31	31	31
CRV-B-4	4	12	12	12	11	31	31	31
CRV-B-6	4	12	12	12	11	31	31	31
CRV-B-8	4	12	12	12	11	31	31	31
CRV-B-9	8	18	24	18	21	46	61	46
CRV-B-10	8	18	24	18	21	46	61	46
CRV-B-12	8	18	24	18	21	46	61	46
CRV-B-12A	8	18	24	18	21	46	61	46

Universal Shield, Position 2

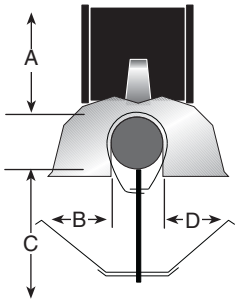

Model	(inches) A	B	C	D	(centimeters) A	B	C	D
CRV-B-2	4	24	48	24	11	61	122	61
CRV-B-4	4	24	48	24	11	61	122	61
CRV-B-6	4	24	48	24	11	61	122	61
CRV-B-8	4	24	48	24	11	61	122	61
CRV-B-9	4	36	48	36	11	92	122	92
CRV-B-10	4	36	48	36	11	92	122	92
CRV-B-12	4	36	48	36	11	92	122	92
CRV-B-12A	4	36	48	36	11	92	122	92

Universal Shield, Position 3

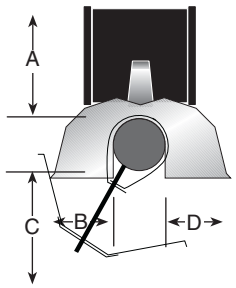

Model	(inches) A	B	C	D	(centimeters) A	B	C	D
CRV-B-2	4	12	56	30	11	31	143	77
CRV-B-4	4	12	56	30	11	31	143	77
CRV-B-6	4	12	56	30	11	31	143	77
CRV-B-8	4	12	56	30	11	31	143	77
CRV-B-9	8	12	60	42	21	31	153	107
CRV-B-10	8	12	60	42	21	31	153	107
CRV-B-12	8	12	60	42	21	31	153	107
CRV-B-12A	8	12	60	42	21	31	153	107

NOTE: 1. All dimensions are from the surfaces of all tubes, couplings, elbows, tees and crosses.
2. Clearances B, C and D can be reduced by 50% after 25' (7.5 m) of tubing downstream from where the combustion chamber and the tube connect.

2-Foot Deco Grille

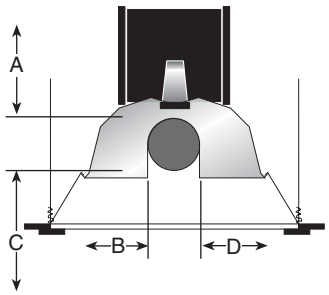

Model	(inches) A	B	C	D	(centimeters) A	B	C	D
CRV-B-2	4	12	48	12	11	31	122	31
CRV-B-4	4	12	48	12	11	31	122	31
CRV-B-6	4	12	48	12	11	31	122	31
CRV-B-8	4	12	48	12	11	31	122	31
CRV-B-9	4	18	56	18	11	46	143	46
CRV-B-10	4	18	56	18	11	46	143	46
CRV-B-12	4	18	56	18	11	46	143	46
CRV-B-12A	4	18	56	18	11	46	143	46

Barrier Shield

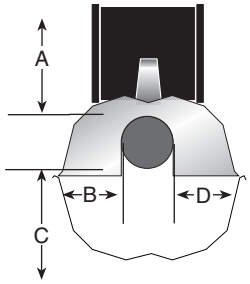

Model	(inches) A	B	C	D	(centimeters) A	B	C	D
CRV-B-2	4	12	12	12	11	31	31	31
CRV-B-4	4	12	12	12	11	31	31	31
CRV-B-6	4	12	12	12	11	31	31	31
CRV-B-8	4	12	12	12	11	31	31	31
CRV-B-9	- UNAPPROVED -				- UNAPPROVED -			
CRV-B-10	- UNAPPROVED -				- UNAPPROVED -			
CRV-B-12	- UNAPPROVED -				- UNAPPROVED -			
CRV-B-12A	- UNAPPROVED -				- UNAPPROVED -			

Protective Grille

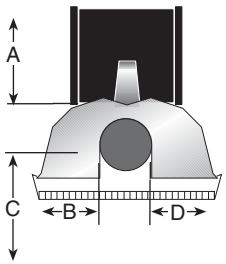

Model	(inches) A	B	C	D	(centimeters) A	B	C	D
CRV-B-2	4	20	48	20	11	51	122	51
CRV-B-4	4	20	48	20	11	51	122	51
CRV-B-6	4	20	48	20	11	51	122	51
CRV-B-8	4	20	48	20	11	51	122	51
CRV-B-9	4	36	60	36	11	92	153	92
CRV-B-10	4	36	60	36	11	92	153	92
CRV-B-12	4	36	60	36	11	92	153	92
CRV-B-12A	4	36	60	36	11	92	153	92

MAJOR COMPONENTS

Major Component Descriptions

Burner

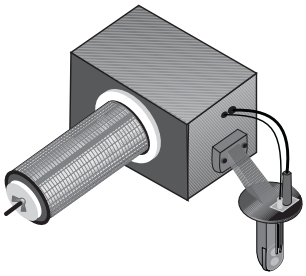

Tube
Hot rolled, heat treated or coated aluminized tube supplied in 10' (3 m) lengths.

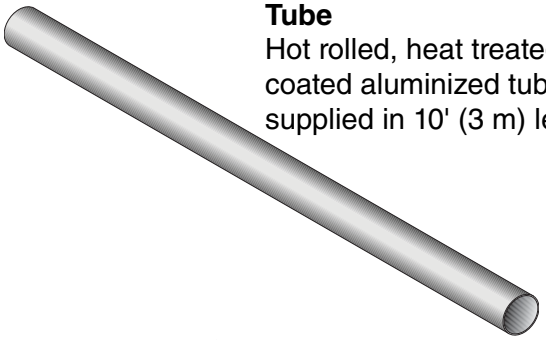

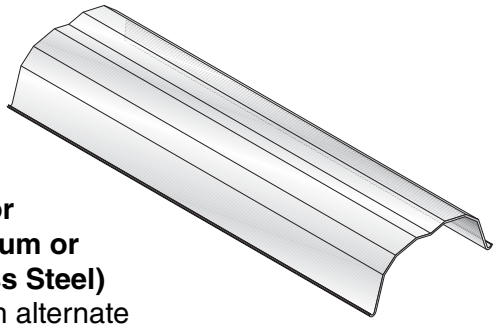

Reflector (Aluminum or Stainless Steel)
Minimum alternate overlap is 6" (16 cm).

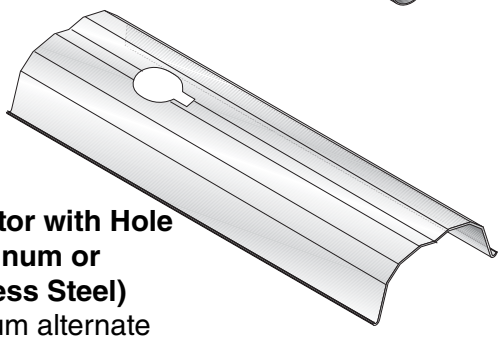

Reflector with Hole (Aluminum or Stainless Steel)
Minimum alternate overlap is 6" (16 cm).

Flex Gas Line with shut-off cock

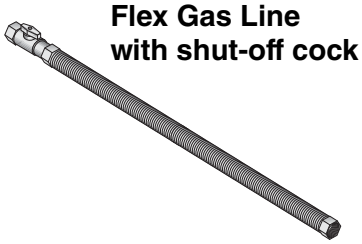

45° Elbow

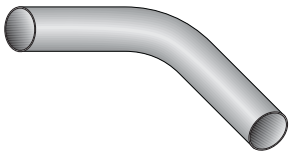

90° Elbow

Combustion Chamber

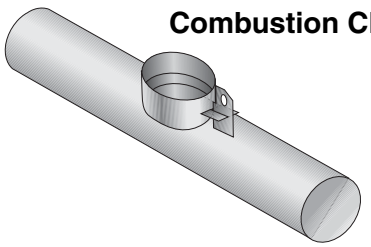

Tee

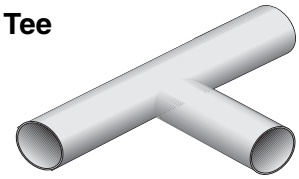

Cross

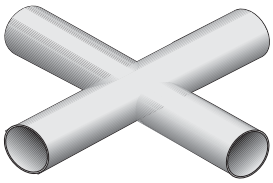

Coupling Assembly with Lock

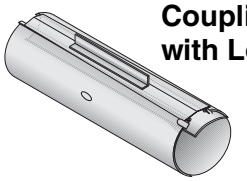

Tube Adapter

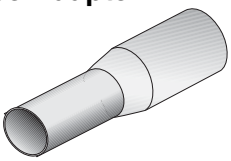

End Vent

Major Component Descriptions (Continued)

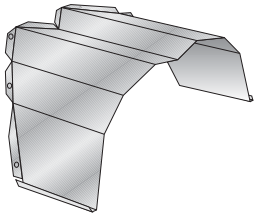

Reflector Joint

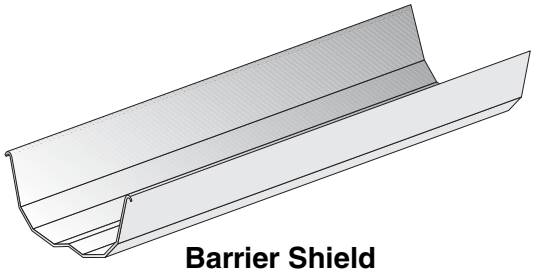

Barrier Shield

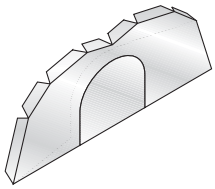

Reflector End Cap (Aluminum or Stainless Steel)
Punch out center section to accommodate tube.

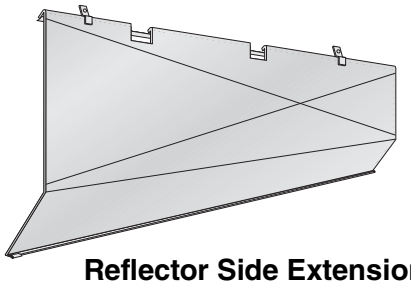

Reflector Side Extension

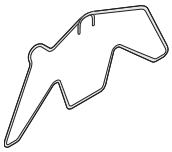

Tube and Reflector Hanger
Suspend system from these hangers.

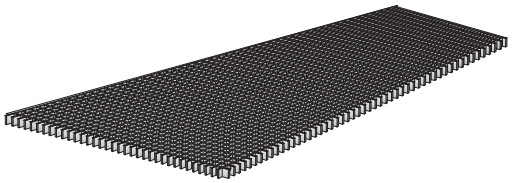

Deco Grille

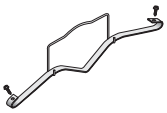

Reflector Support Strap & Wire Form

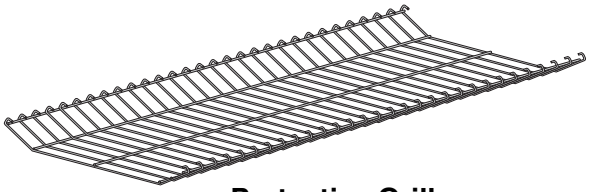

Protective Grille

S-Hook

Turnbuckle

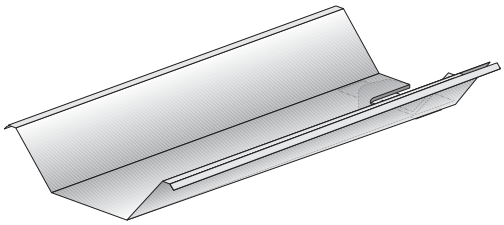

Universal Shield

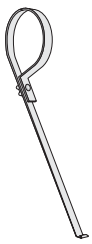

Reflector Side Extension Bracket

Condensate Valve Assembly

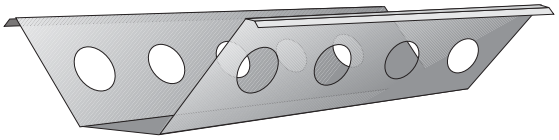

Universal Shield with Holes

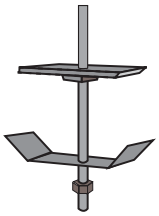

Bracket Assembly

Major Component Descriptions (Continued)

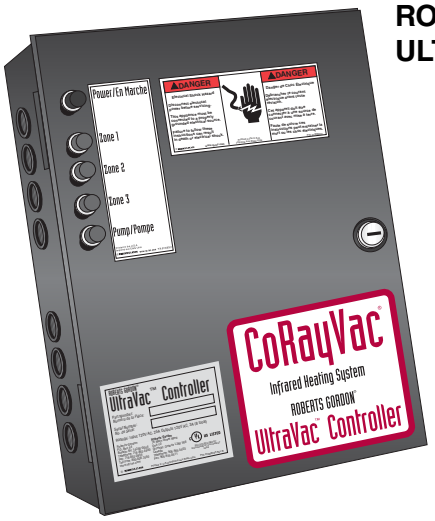

ROBERTS GORDON®
ULTRAVAC™ Controller

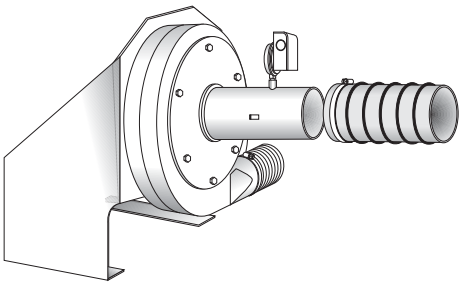

EP-100 Pump Package - 4" dia
For more information, refer to the EP-100 Installation, Operation and Service Manual (P/N 127201NA).

ROBERTS GORDON®
ULTRAVAC™
Variable Frequency Drive

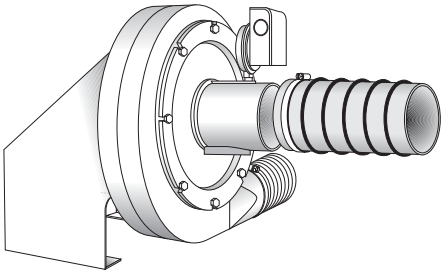

EP-201 Pump Package - 4" dia
EP-203 Pump Package - 4" dia
For more information, refer to the EP-200 Series Installation, Operation and Service Manual (P/N 127200NA).

System Control

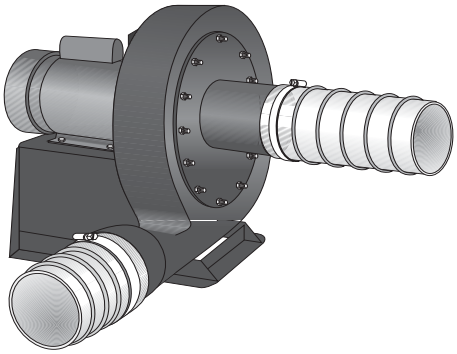

EP-301 Pump Package - 4" dia
EP-301 Pump Package - 6" dia
EP-303 Pump Package - 4" dia
EP-303 Pump Package - 6" dia
For more information, refer to the EP-300 Series Installation, Operation and Service Manual (P/N 127202NA).

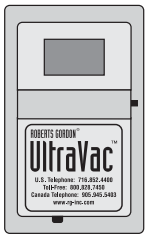

ROBERTS GORDON®
ULTRAVAC™
Adjustable Indoor Sensor

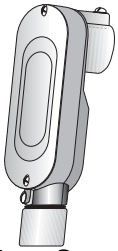

Outdoor Sensor
(P/N 10081501)

HEATER INSTALLATION

Heater Assembly Overview

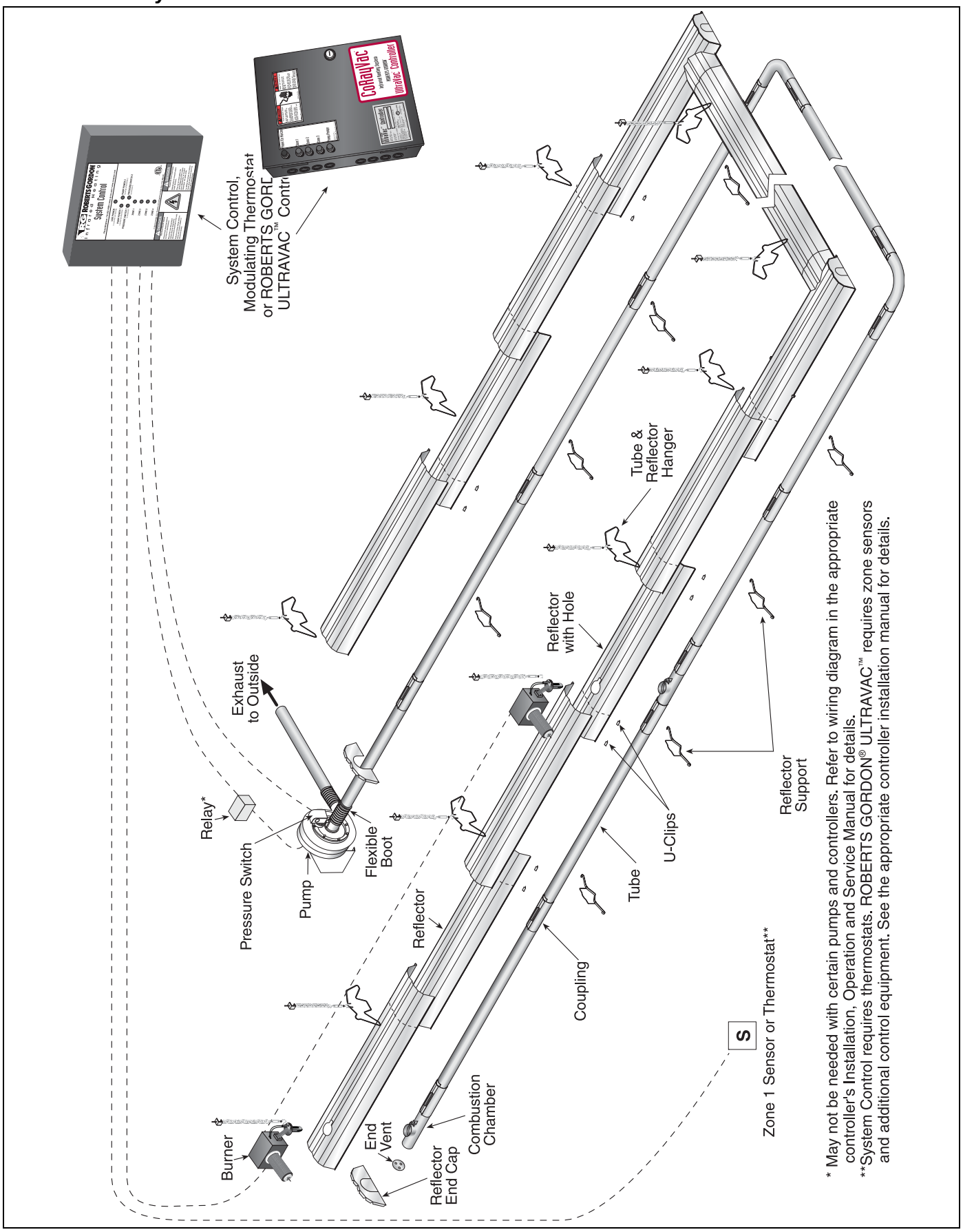

* May not be needed with certain pumps and controllers. Refer to wiring diagram in the appropriate controller's Installation, Operation and Service Manual for details.

**System Control requires thermostats. ROBERTS GORDON® ULTRAVAC™ requires zone sensors and additional control equipment. See the appropriate controller installation manual for details.

Critical Hanger Placement

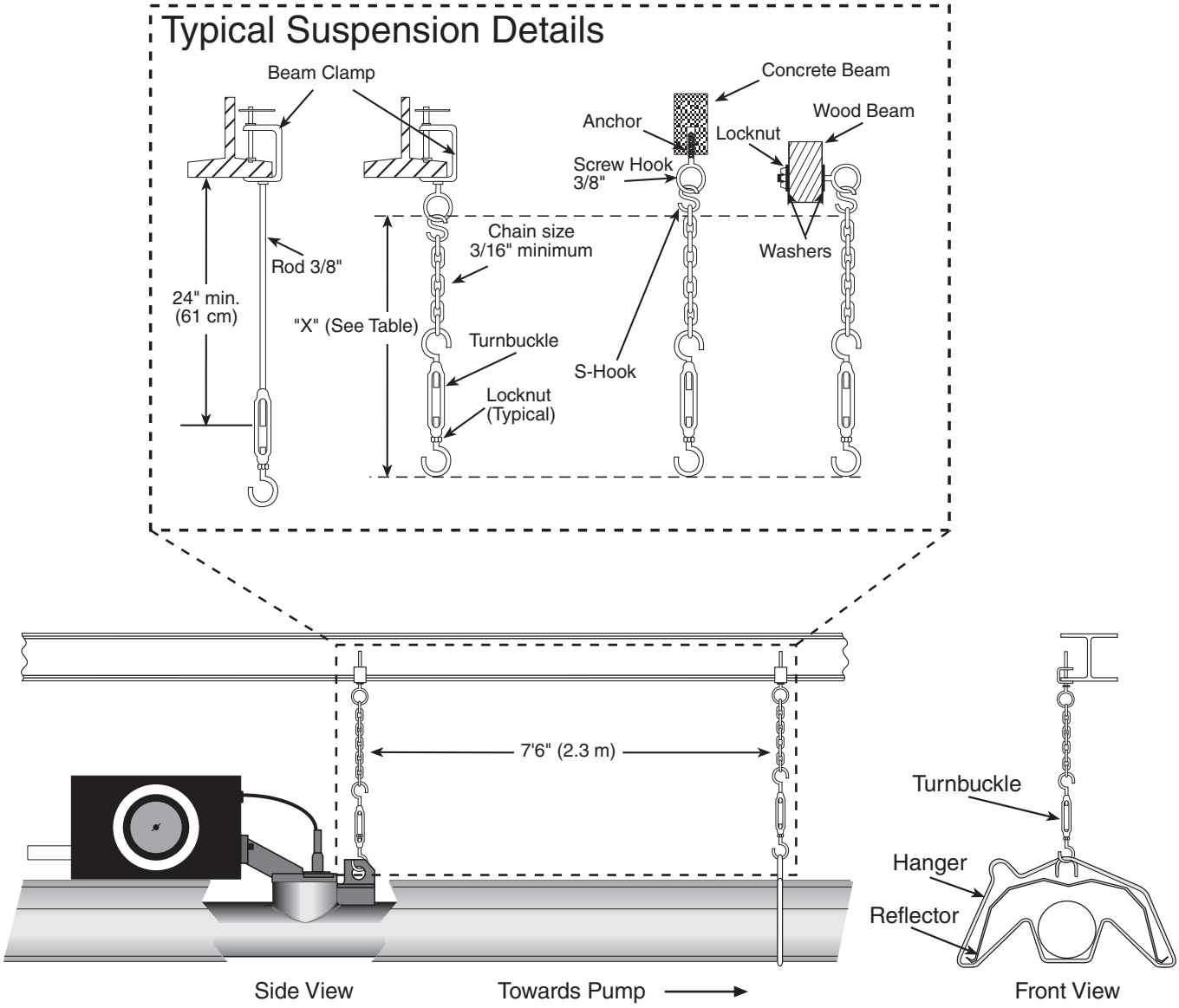

Description	Part Number
Turnbuckle	91903201
S-Hook	91907302
Tube/Reflector Hanger	03090100

Run Length	Typical Expansion	Minimum "X" Length
50' (15 m)	±1" (3 cm)	12" (30 cm)
100' (31 m)	±2" (5 cm)	24" (61 cm)
150' (46 m)	±3" (8 cm)	36" (91 cm)
200' (61 m)	±4" (10 cm)	46" (122 cm)
250' (76 m)	±5" (13 cm)	57" (145 cm)

Tube Installation

NOTE: Tubing requires a downward slope of 1/2" (13 mm) per 20' (6 m) away from burner. Tailpipe tubing requires a downward slope of 1" (26 mm) per 20' (6 m) away from burner.

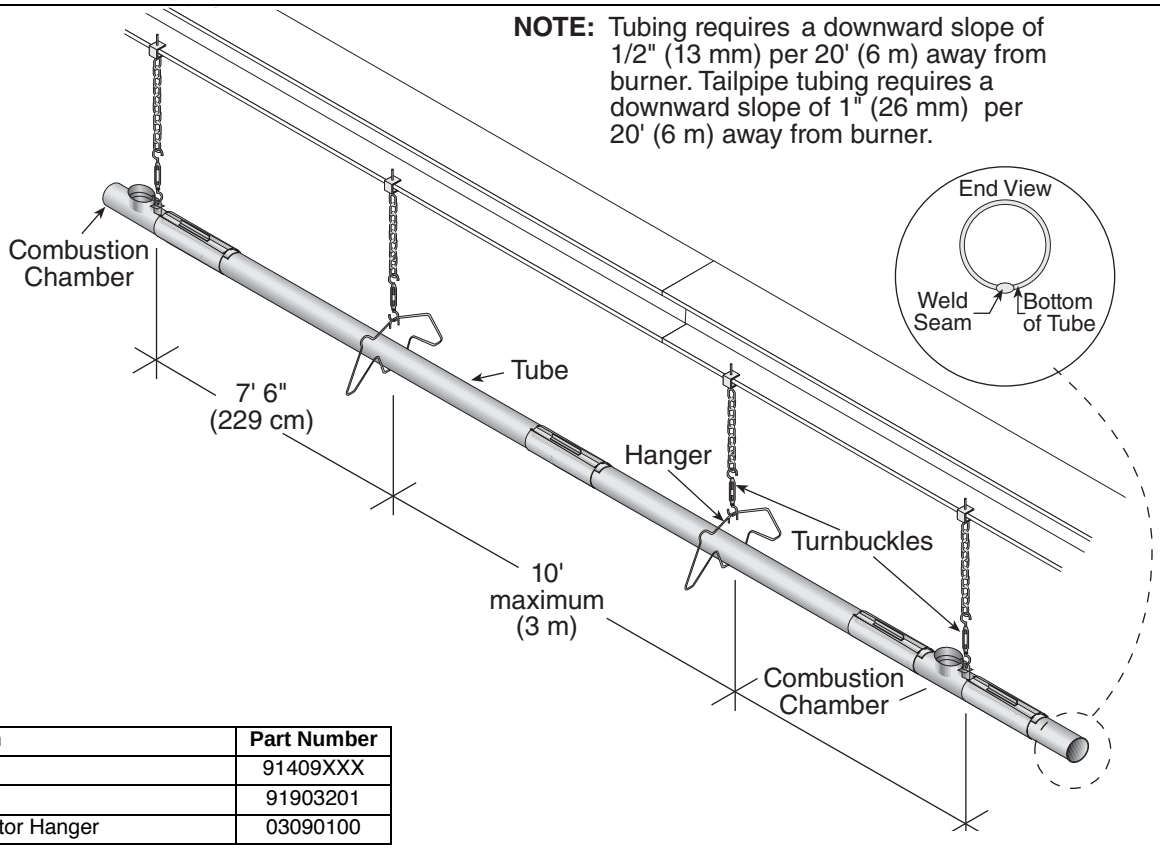

Description	Part Number
Tube	91409XXX
Turnbuckle	91903201
Tube/Reflector Hanger	03090100

Coupling and Tube Assembly

A Close coupling with tab.

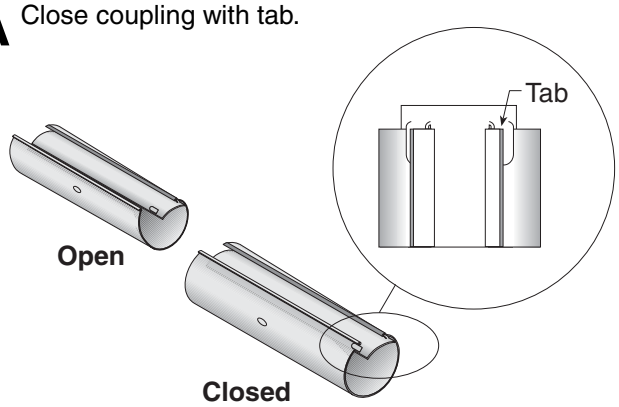

B Start slide bar/coupling lock onto coupling.

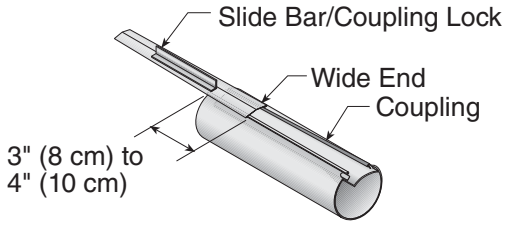

C Insert tubes into coupling.

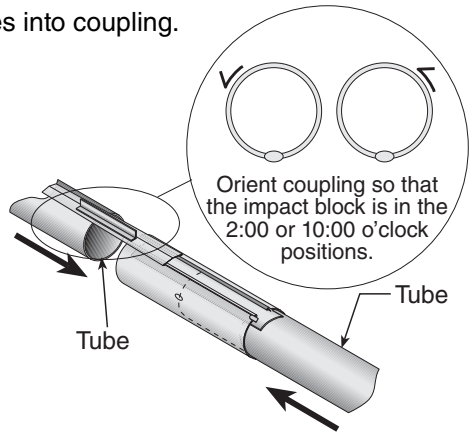

D Tighten coupling to join tubes.

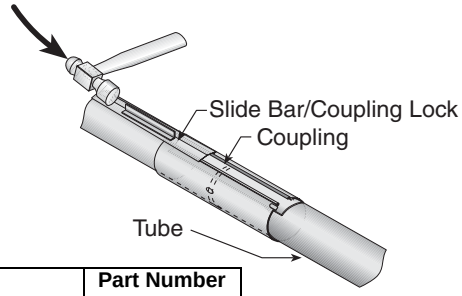

Description	Part Number
Coupling	01329600
Slide Bar/Coupling Lock	01329700
Tube	91409XXX

Coupling and Tube Assembly (Continued)

Tighten slide bar as shown below.

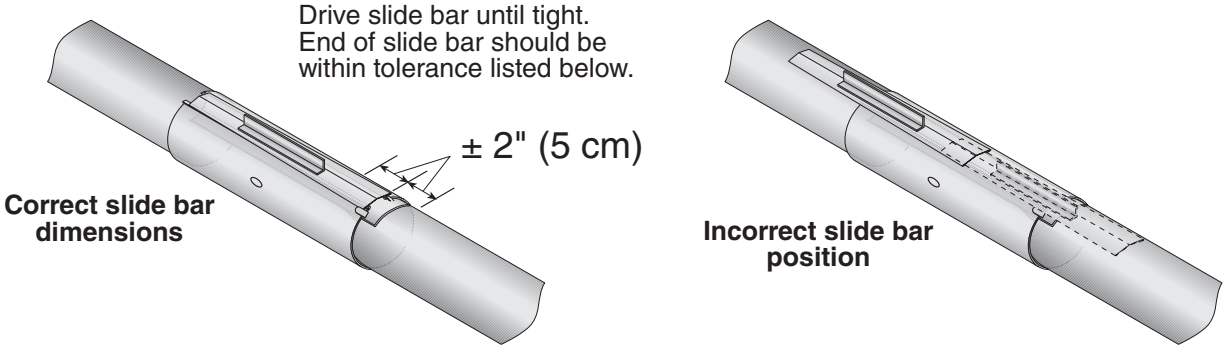

Repeat A - D until all tubes are assembled.

Elbow Installation

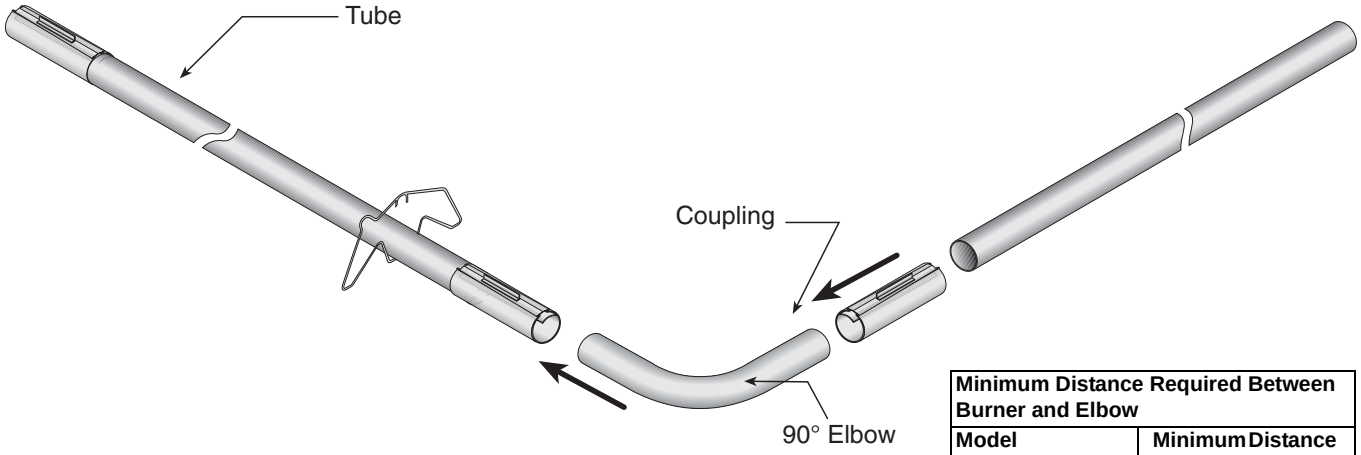

Description	Part Number
Elbow Package	**02718702**
90° Elbow	01335801
Coupling	01312700
Reflector End Cap	02750800
Reflector Joint Piece	02750900
U-Clip Package	91107720

Minimum Distance Required Between Burner and Elbow	
Model	**Minimum Distance**
CRVB-2	5' (1.5 m)
CRVB-4	5' (1.5 m)
CRVB-6	10' (3 m)
CRVB-8	10' (3 m)
CRVB-9	10' (3 m)
CRVB-10	15' (4.5 m)
CRVB-12A	15' (4.5 m)
CRVB-12	15' (4.5 m)

Elbow Installation

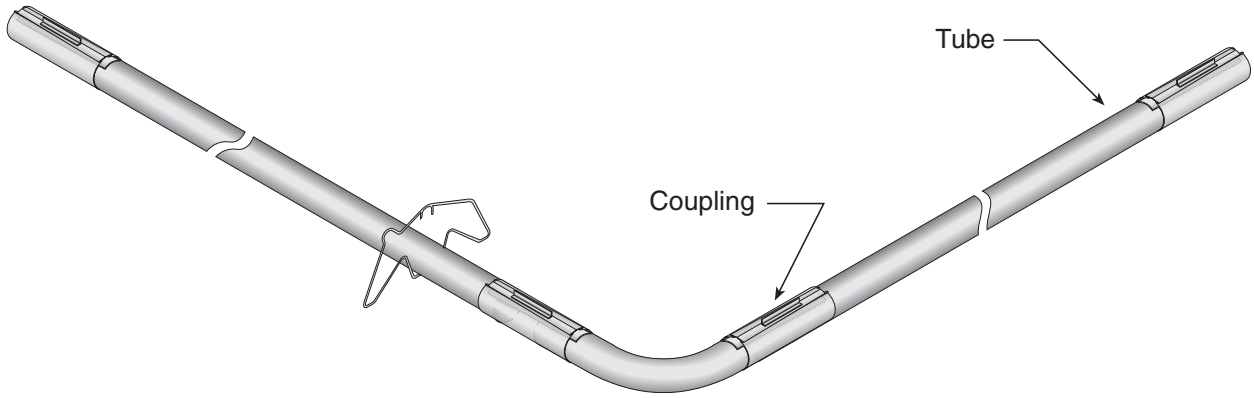

Reflector Installation with Hole

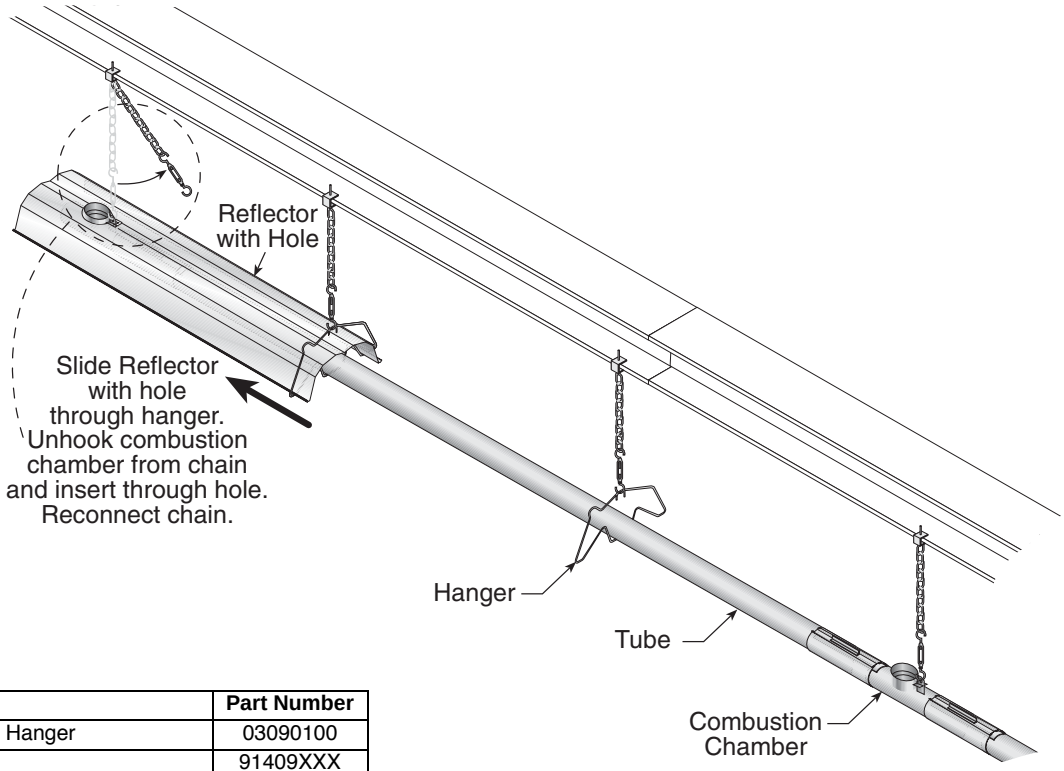

Description	Part Number
Tube/Reflector Hanger	03090100
Tube	91409XXX
Reflector with Hole	02750304

Reflector Installation

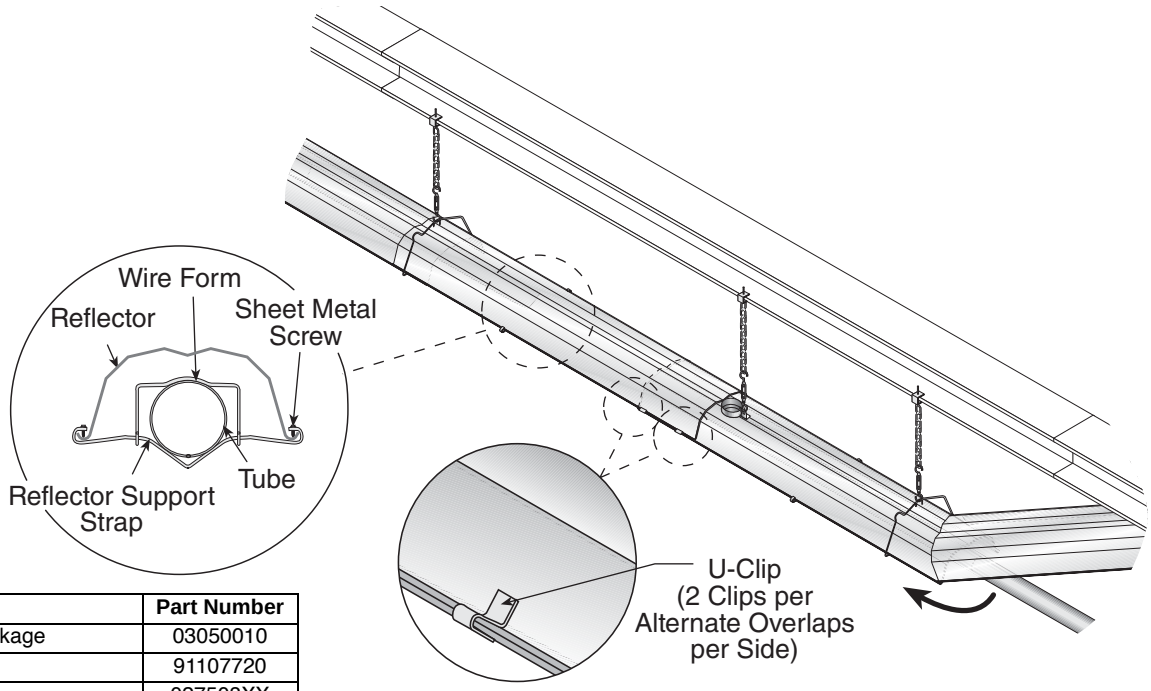

Description	Part Number
Reflector Support Package	03050010
U-Clip Package	91107720
Reflector End Cap	027508XX

Reflector, U-Clip and Reflector Support Installation

The pictorial drawings of the heater construction in this Section are schematic only and provide a general guideline of where hangers, reflector supports and U-clips are to be installed.

To ensure proper expansion and contraction movement of the reflectors, a combination of U-clips and reflector supports are used. The positioning of reflector supports and U-clips depend on the individual installation. Use either pop rivets or sheet metal screws instead of u-clips when installing end caps and joint pieces in areas where impact and high wind may be a factor. The following rules must be observed.

1. The first reflector after the burner must be affixed in the middle of the reflector with a reflector support and tight screws.

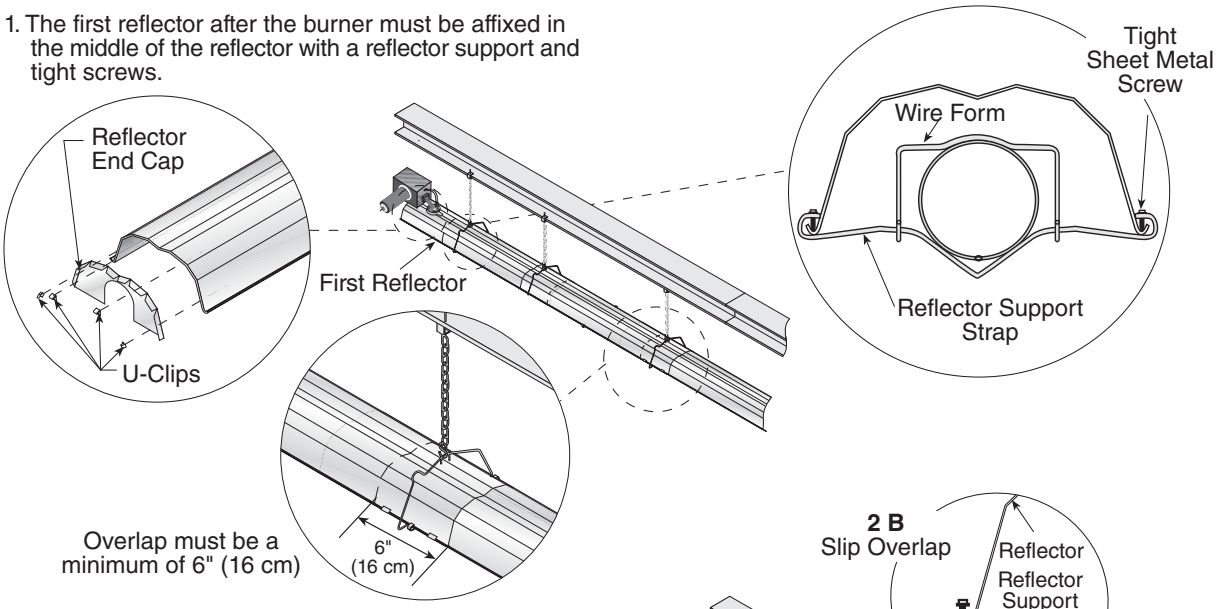

2. The overlap at the first and second reflector is a **slip overlap**. Thereafter, every third reflector joint is a slip overlap. A slip overlap is achieved by either:
   a.) both reflectors lay inside a hanger. (No reflector support needed).
   b.) using a reflector support with loose screws at the reflector overlap.

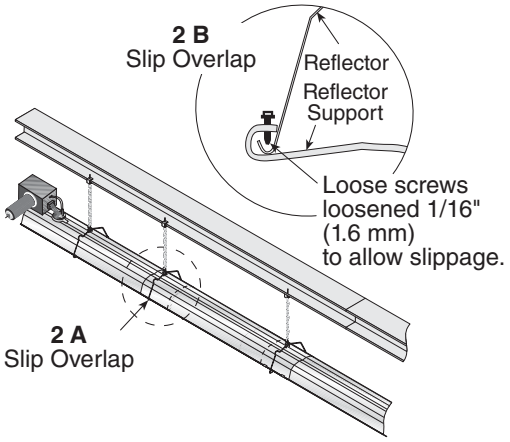

3. The remaining reflector overlaps require a **non-slip overlap connection.** To affix the reflectors together in a non-slip overlap either:
   a.) use reflector support and tight screws.
   b.) if both reflectors lay inside a hanger, u-clips or sheet metal screws may be used.

   This section of three reflectors joined together must be affixed to the tube with at least one reflector support with tight screws.

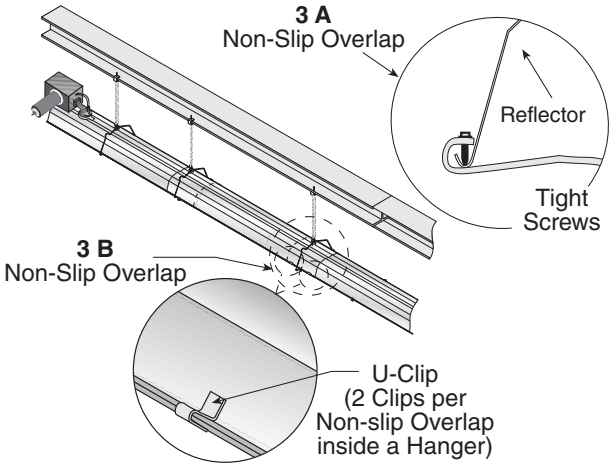

Description	Part Number
Reflector Support Package	**03050010**
Wire Form	91908004
Reflector Support Strap	03050000
Screw #8 x 3/4	94320812
U-Clip Package	91107720
Reflector End Cap	027508XX

Burner Installation

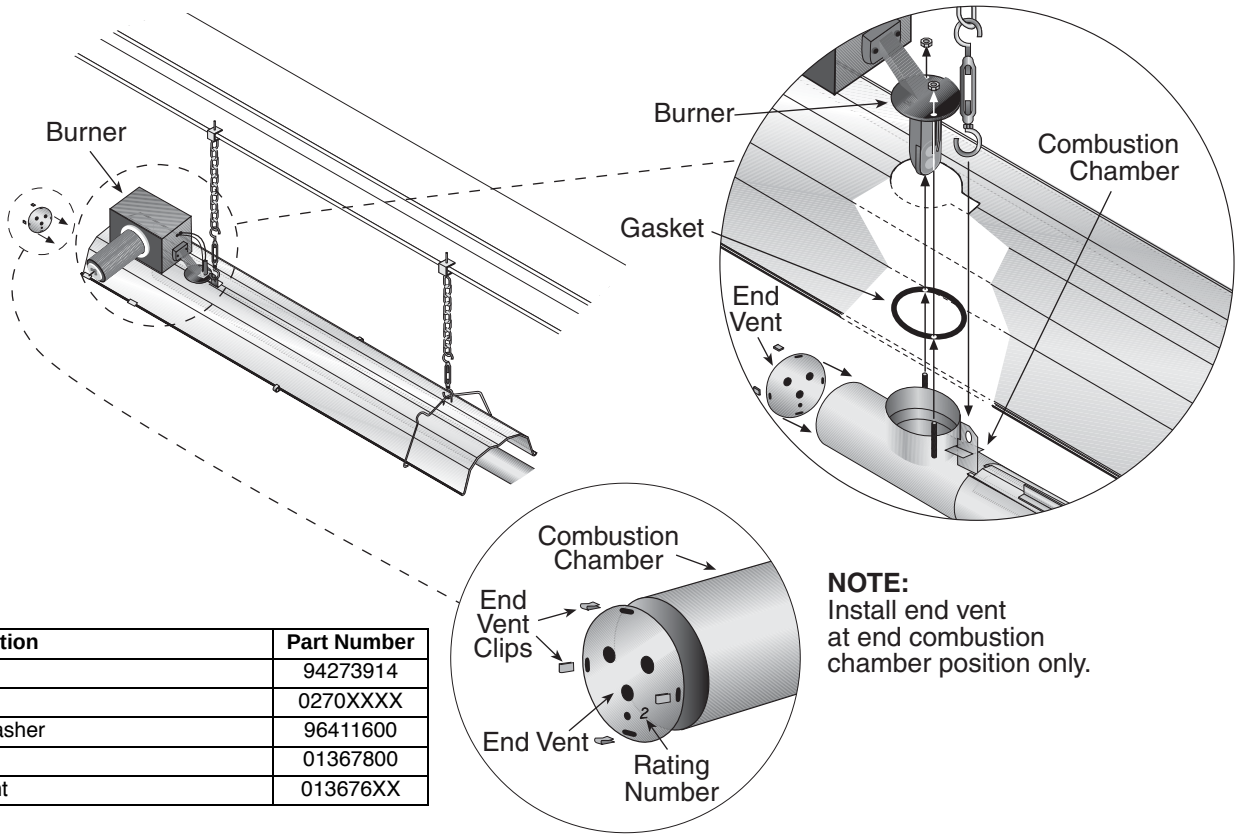

NOTE:
Install end vent at end combustion chamber position only.

Description	Part Number
Bolt	94273914
Burner	0270XXXX
Lock Washer	96411600
Gasket	01367800
End Vent	013676XX

Tee Installation

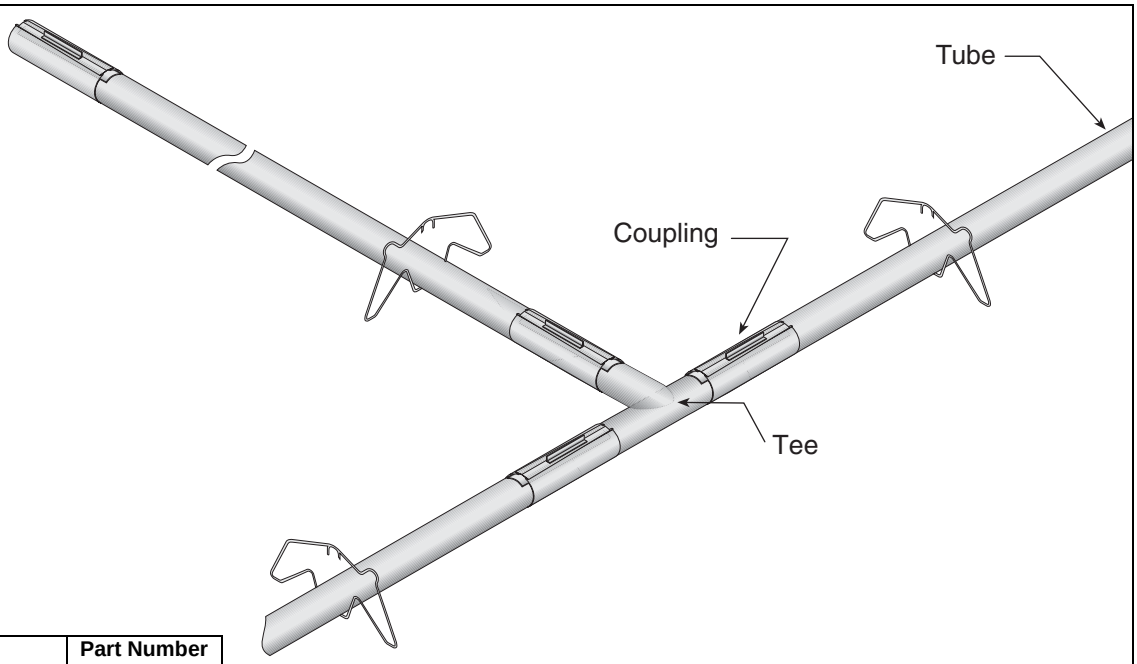

Description	Part Number
Tee	01330XXX
Tube/Reflector Hanger	03090100
Tube	91409XXX
Coupling	01312700

Reflector Joint Installation

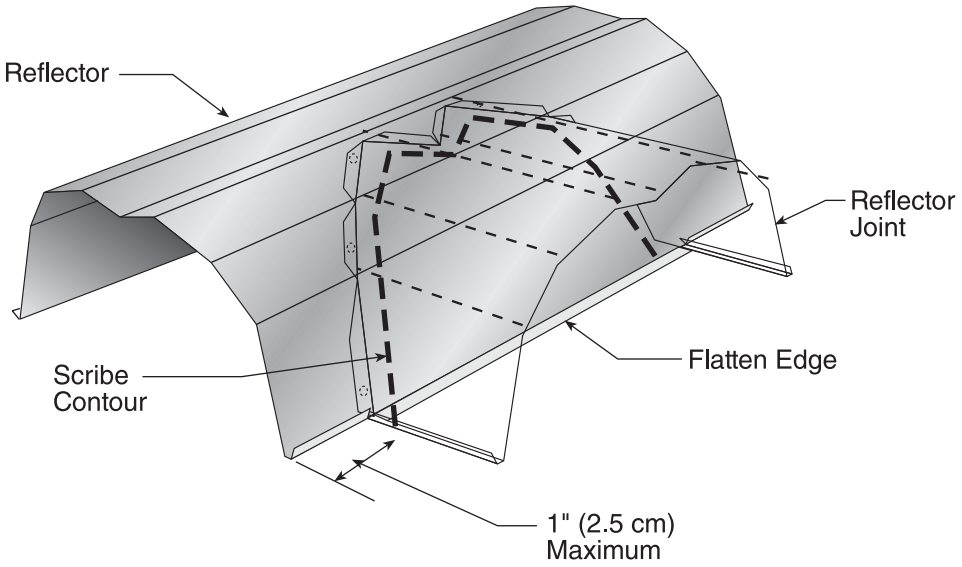

Reflector Joint Installation

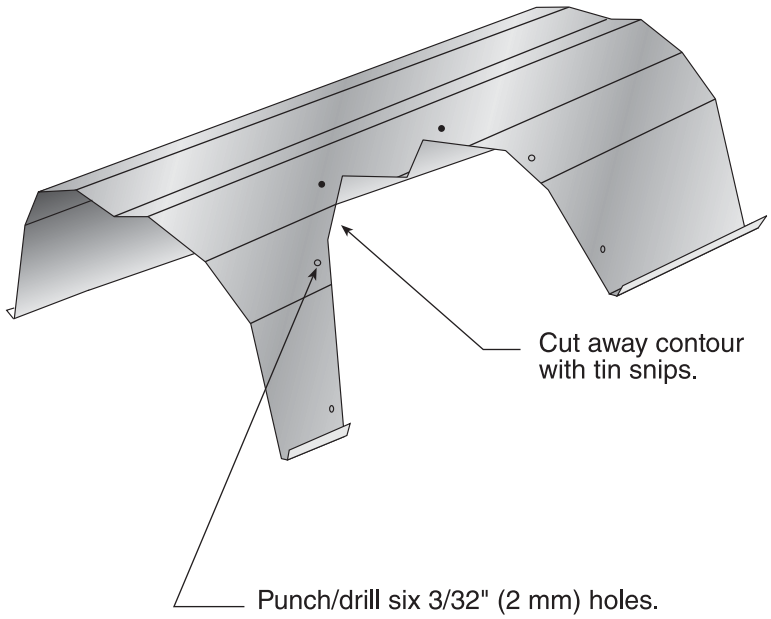

Reflector Joint Detail

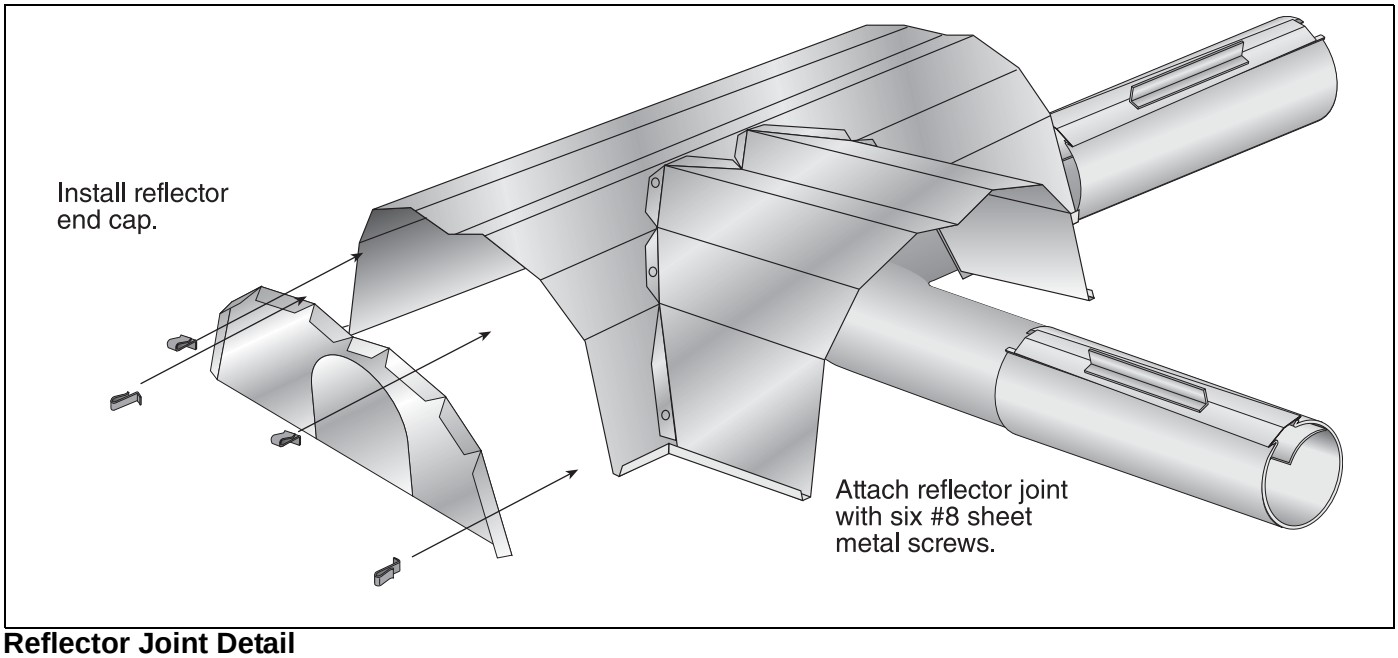

Reflector Joint Detail

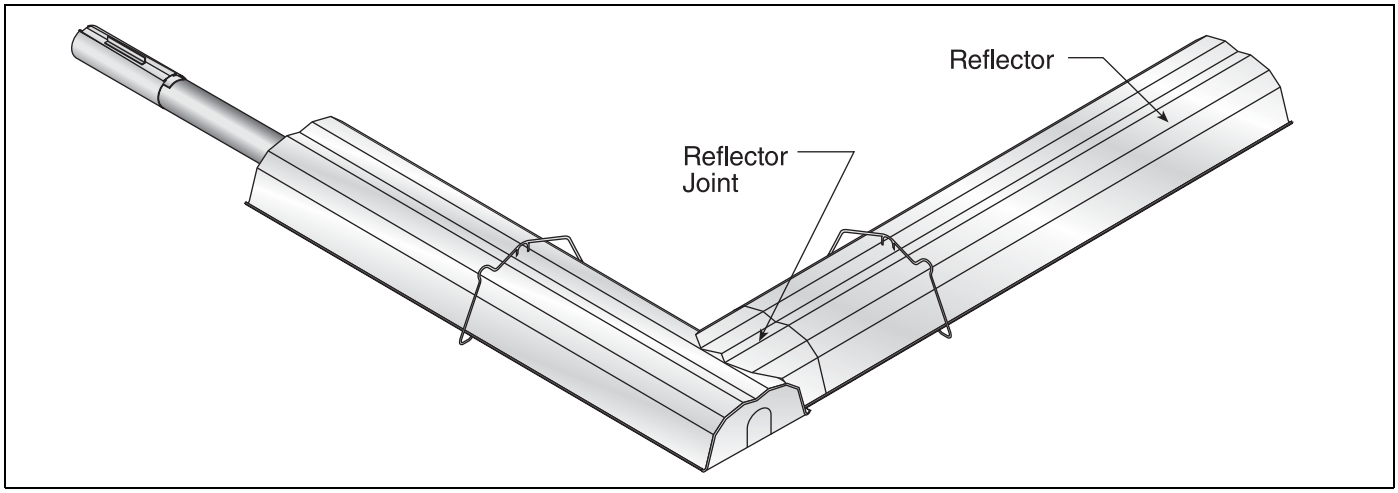

PUMP INSTALLATION AND VENTING

Pump Installation

For complete pump installation, including wiring and venting, please refer to the EP-100, EP-200 or EP-300 Series Installation, Operation and Service Manuals, latest edition.

EP-200 Condensate Valve Assembly

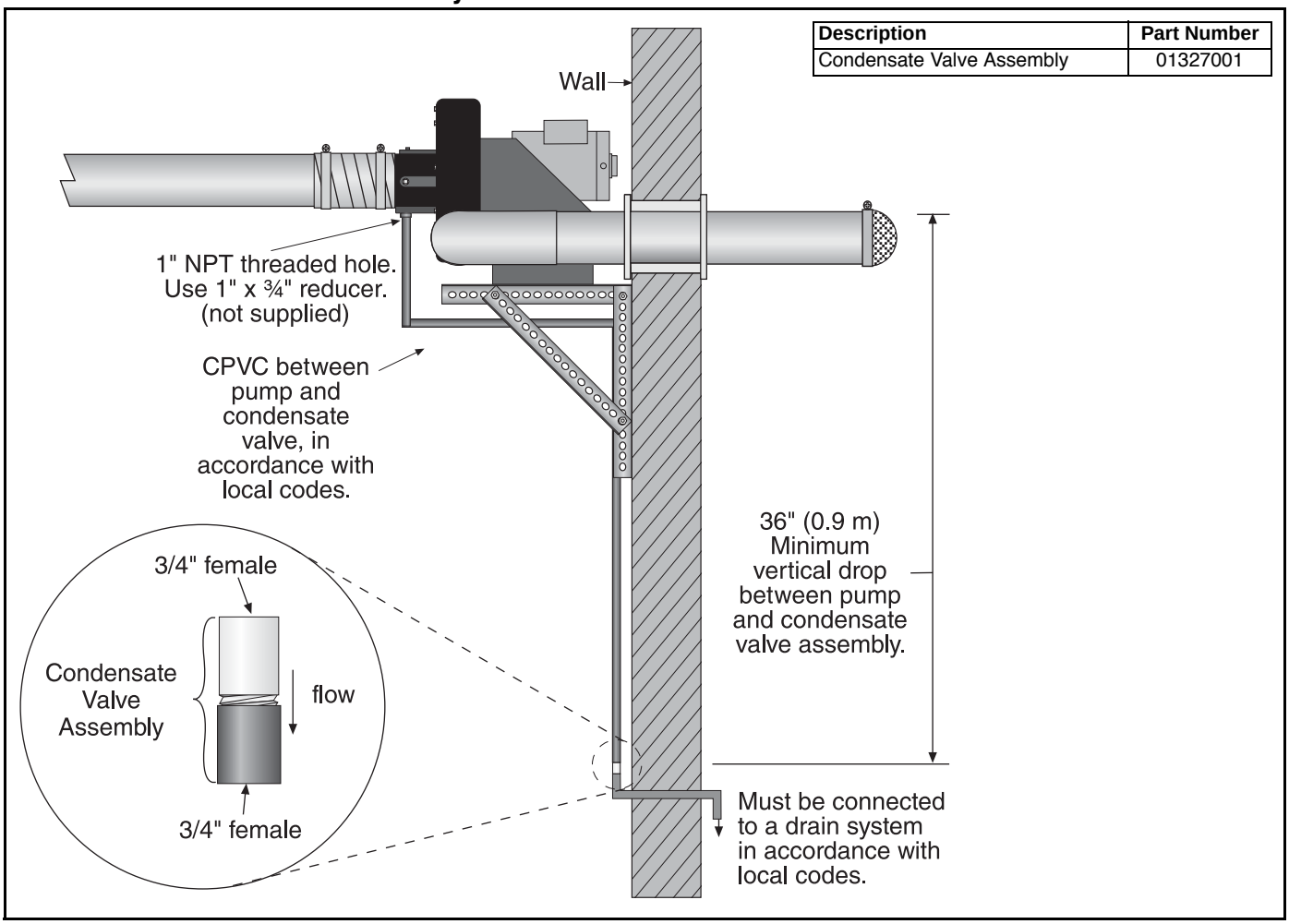

Description	Part Number
Condensate Valve Assembly	01327001

Vertical Venting Configuration

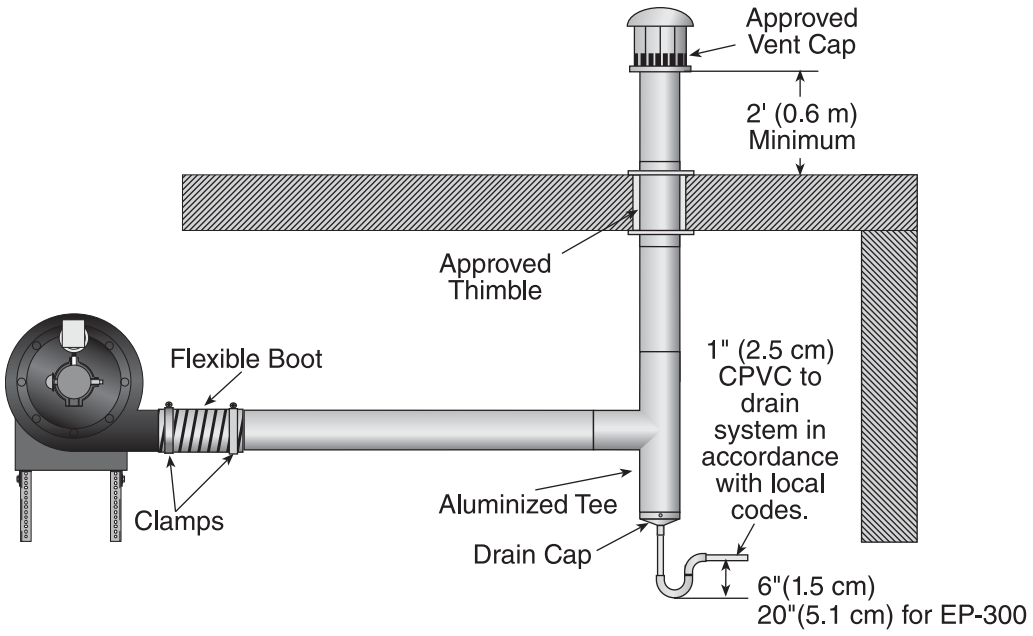

Part Number	Description
01330203	Tee, 4" (10 cm) Aluminized
01330204	Tee, 6" (15 cm) Aluminized
01331900	Damper Coupling, 4" (10 cm)
01335801	Elbow, 4" (10 cm) Aluminized 90°
02718851	Drain Cap, 4" (10 cm)
02718852	Drain Cap Assembly, 6" (15 cm)
01327002	Condensate Neutralization Tube 200
01327003	Condensate Neutralization Tube 600
01327004	Condensate Neutralization Tube 1000
01327005	Condensate Neutralization Tube 2000
90502300	Vent Cap, 4" (10 cm) Metalbestos

Part Number	Description
90502302	Vent Cap, 6" (15 cm) Metalbestos
91409403	Tube, Aluminized 4" (10 cm) dia. 10' (3 m)
91409420	Tube, Aluminized 6" (15 cm) dia. 10' (3 m)
91412800	Flexible Boot, 4" (10 cm)
91412801	4 - Flexible Boot, 1/2" (1.3 cm)
91412802	Flexible Boot, 6" (15 cm)
91901300	Boot Clamp, 4" (10 cm)
91913703	Boot Clamp, 6" (15 cm)
E0009356	Damper Coupling, 6" (15 cm)
T0100320	Elbow, 6" (15 cm) Aluminized 90°

Horizontal Venting 4" (10 cm) Pipe
EP-100 Horizontal Venting Configurations

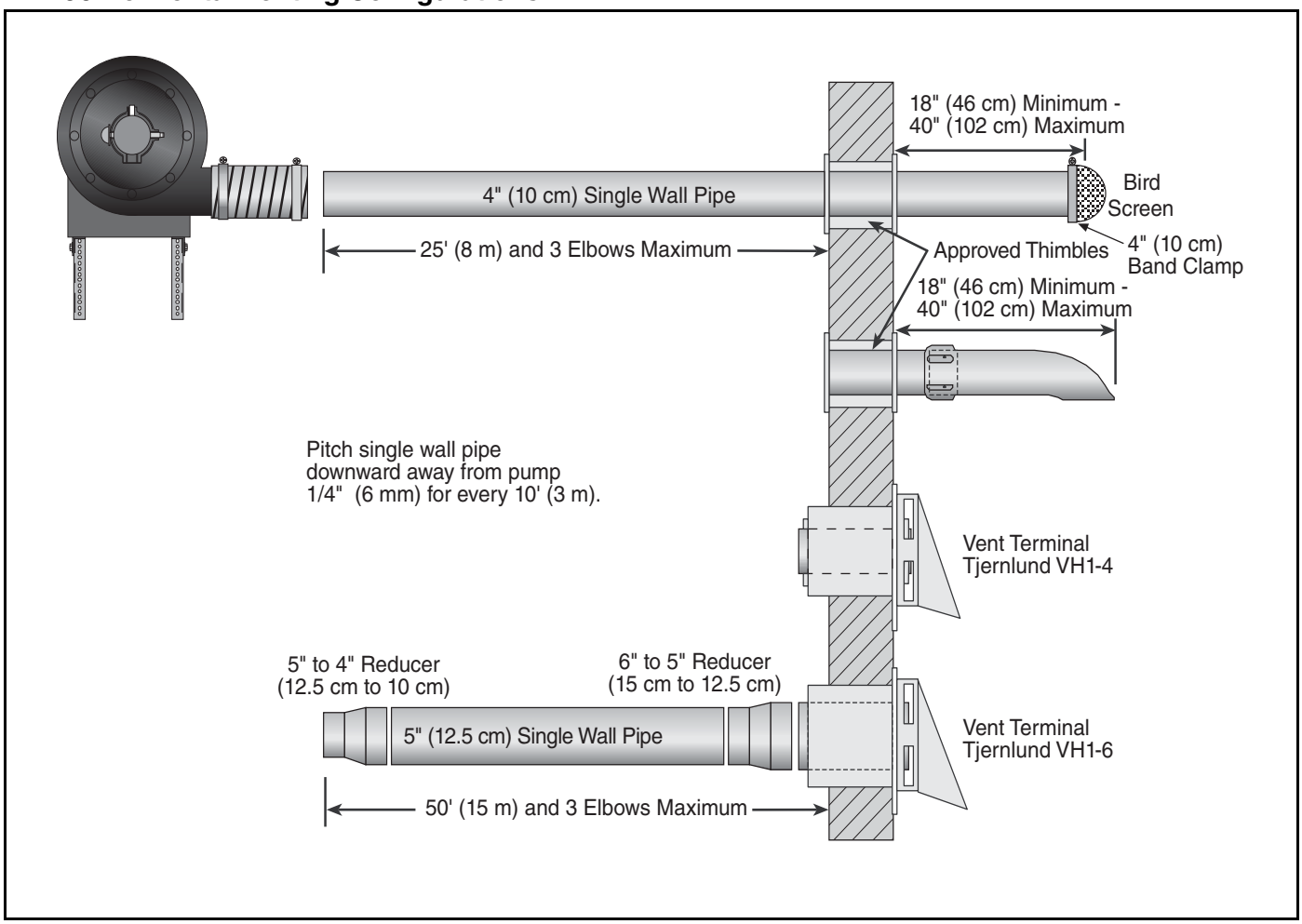

Part Number	Description
01330203	Tee, 4" (10 cm) Aluminized
01331900	Damper Coupling, 4" (10 cm)
01335801	Elbow, 4" (10 cm) Aluminized 90°
01365400	Bird Screen, 4" (10 cm)
02537801-1P	Vent Terminal (Non-Combustible Wall)
02718851	Drain Cap, 4" (10 cm)
01327002	Condensate Neutralization Tube 200
01327003	Condensate Neutralization Tube 600
01327004	Condensate Neutralization Tube 1000

Part Number	Description
01327005	Condensate Neutralization Tube 2000
90502100	Vent Terminal, 4" (10 cm) (Combustible Wall)
90502101	Vent Terminal, 6" (15 cm) (Combustible Wall)
91409403	Tube, Aluminized 4" (10 cm) dia. 10' (3 m)
91412800	Flexible Boot, 4" (10 cm)
91901300	Boot Clamp, 4" (10 cm)
Not Supplied	Tube, Aluminized 5" (12.7 cm) dia. 10' (3 m)
Not Supplied	Tube Adapter, 5" (12.7 cm) dia. x 4" (10 cm) dia.
Not Supplied	Tube Adapter, 6" (15.2 cm) dia. x 5" (12.7 cm) dia.

EP-200 Series Horizontal Venting Configurations

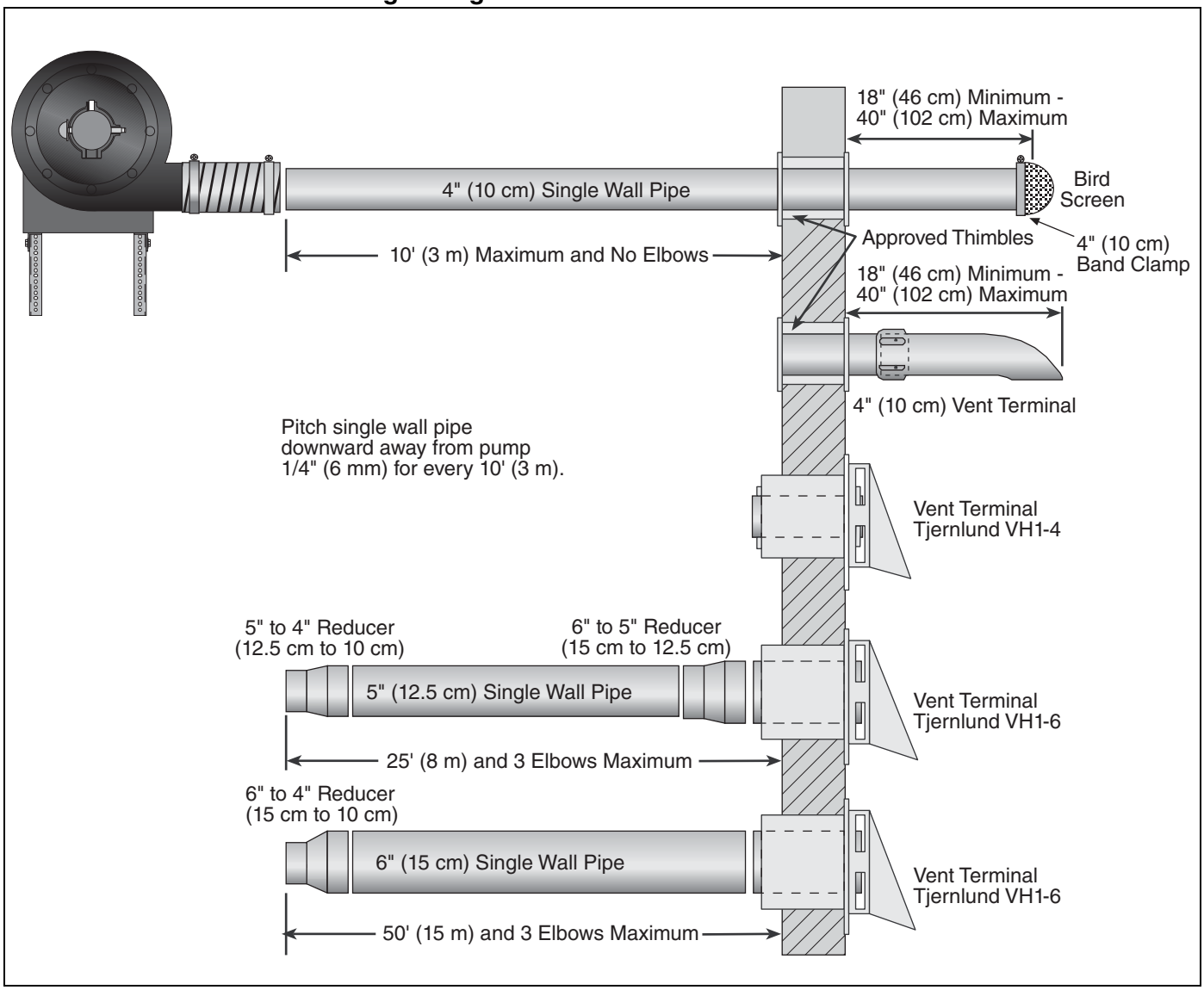

Part Number	Description
01330203	Tee, 4" (10 cm) Aluminized
01331900	Damper Coupling, 4" (10 cm)
01335801	Elbow, 4" (10 cm) Aluminized 90°
01365400	Bird Screen, 4" (10 cm)
02537801-1P	Vent Terminal (Non-Combustible Wall)
02718851	4" Drain Cap
01327002	Condensate Neutralization Tube 200
01327003	Condensate Neutralization Tube 600
01327004	Condensate Neutralization Tube 1000
01327005	Condensate Neutralization Tube 2000
90502100	Vent Terminal, 4" (10 cm) (Combustible Wall)

Part Number	Description
90502101	Vent Terminal, 6" (15 cm) (Combustible Wall)
91409403	Tube, Aluminized 4" (10 cm) dia. 10' (3 m)
91409420	Tube, Aluminized 6" (15 cm) dia. 10' (3 m)
91412801	4 - Flexible Boot, 1/2" (1.3 cm)
91418200	Tube Adapter, 6" (15.2 cm) dia. x 4" (10 cm) dia.
91901300	Boot Clamp, 4" (10 cm)
91906900	Silicone Ring
Not Supplied	Tube, Aluminized 5" (12.7 cm) dia. 10' (3 m)
Not Supplied	Tube Adapter, 5" (12.7 cm) dia. x 4" (10 cm) dia.
Not Supplied	Tube Adapter, 6" (15.2 cm) dia. x 5" (12.7 cm) dia.

EP-300 Series Horizontal Venting Configurations

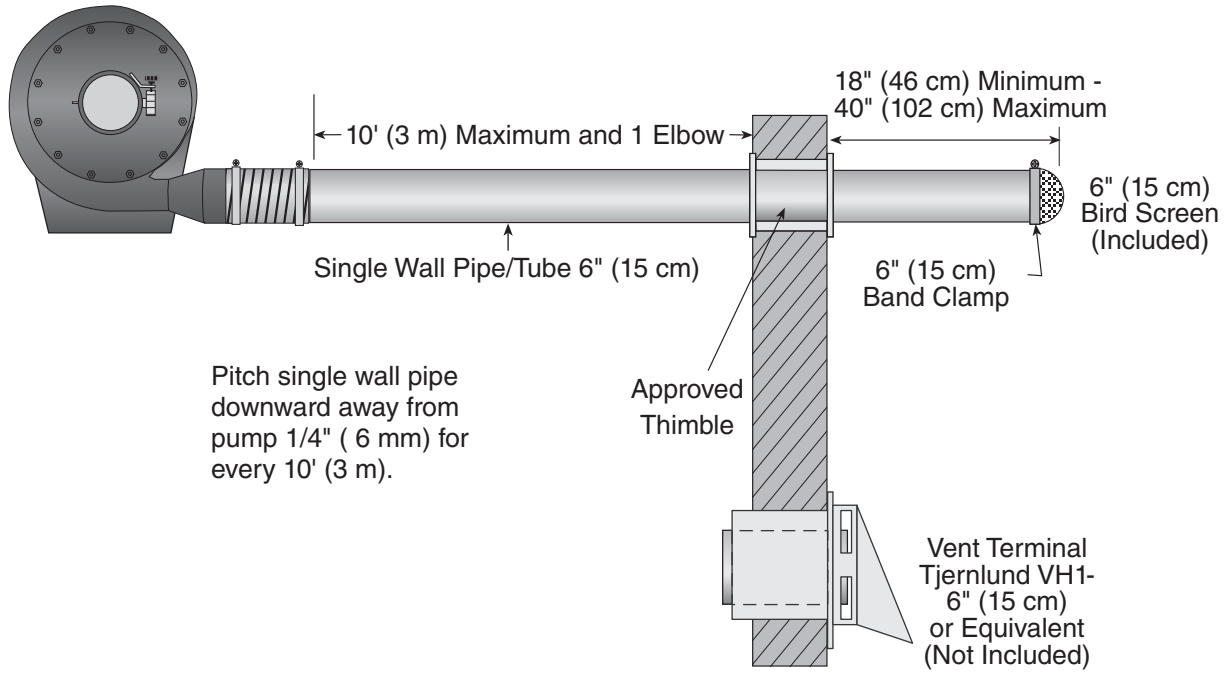

Part Number	Description
01330203	Tee, 4" (10 cm) Aluminized
01330204	Tee, 6" (15 cm) Aluminized
01331900	Damper Coupling, 4" (10 cm)
01335801	Elbow, 4" (10 cm) Aluminized 90°
01397400	Bird Screen, 6" (15 cm)
02537801-1P	Vent Terminal (Non-Combustible Wall)
02718851	Drain Cap, 4" (10 cm)
02718852	Drain Cap, 6" (15 cm)
01327002	Condensate Neutralization Tube 200
01327003	Condensate Neutralization Tube 600
01327004	Condensate Neutralization Tube 1000
01327005	Condensate Neutralization Tube 2000

Part Number	Description
90502100	Vent Terminal, 4" (10 cm) (Combustible Wall)
90502101	Vent Terminal, 6" (15 cm) (Combustible Wall)
90502302	Vent Cap, 6" (15 cm) Metalbestos
91409403	Tube, Aluminized 4" (10 cm) dia. 10' (3 m)
91409420	Tube, Aluminized 6" (15 cm) dia. 10' (3 m)
91412800	Flexible Boot, 4" (10 cm)
91412802	Flexible Boot, 6" (15 cm)
91418200	Tube Adapter, 6" (15.2 cm) dia. x 4" (10 cm) dia.
91901300	Boot Clamp, 4" (10 cm)
91913703	Boot Clamp, 6" (15 cm)
E0009356	Damper Coupling, 6" (15 cm)
T0100320	Elbow, 6" (15 cm) Aluminized 90°

Filter Housing Assembly

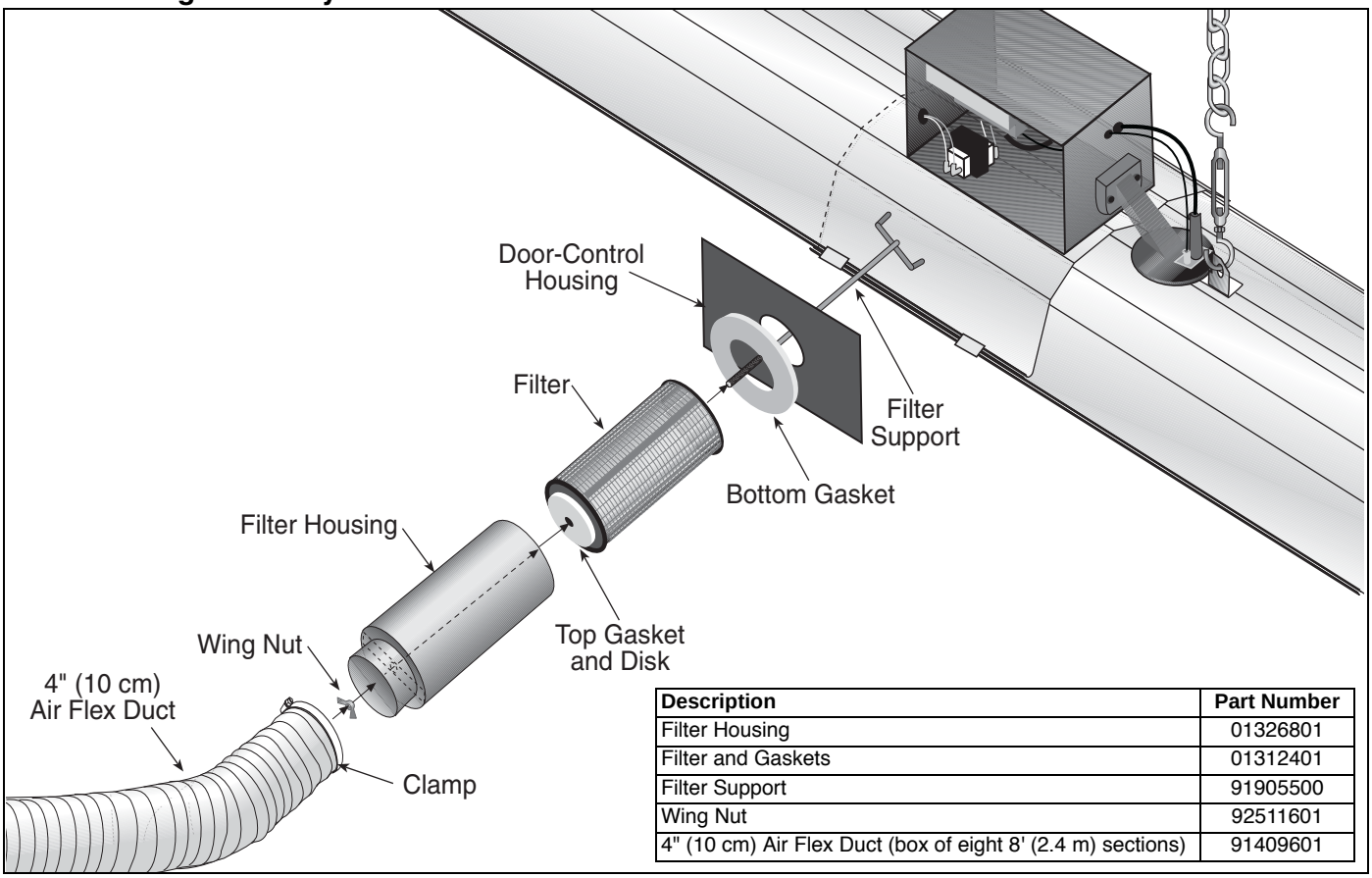

Description	Part Number
Filter Housing	01326801
Filter and Gaskets	01312401
Filter Support	91905500
Wing Nut	92511601
4" (10 cm) Air Flex Duct (box of eight 8' (2.4 m) sections)	91409601

Air Supply Blower Support

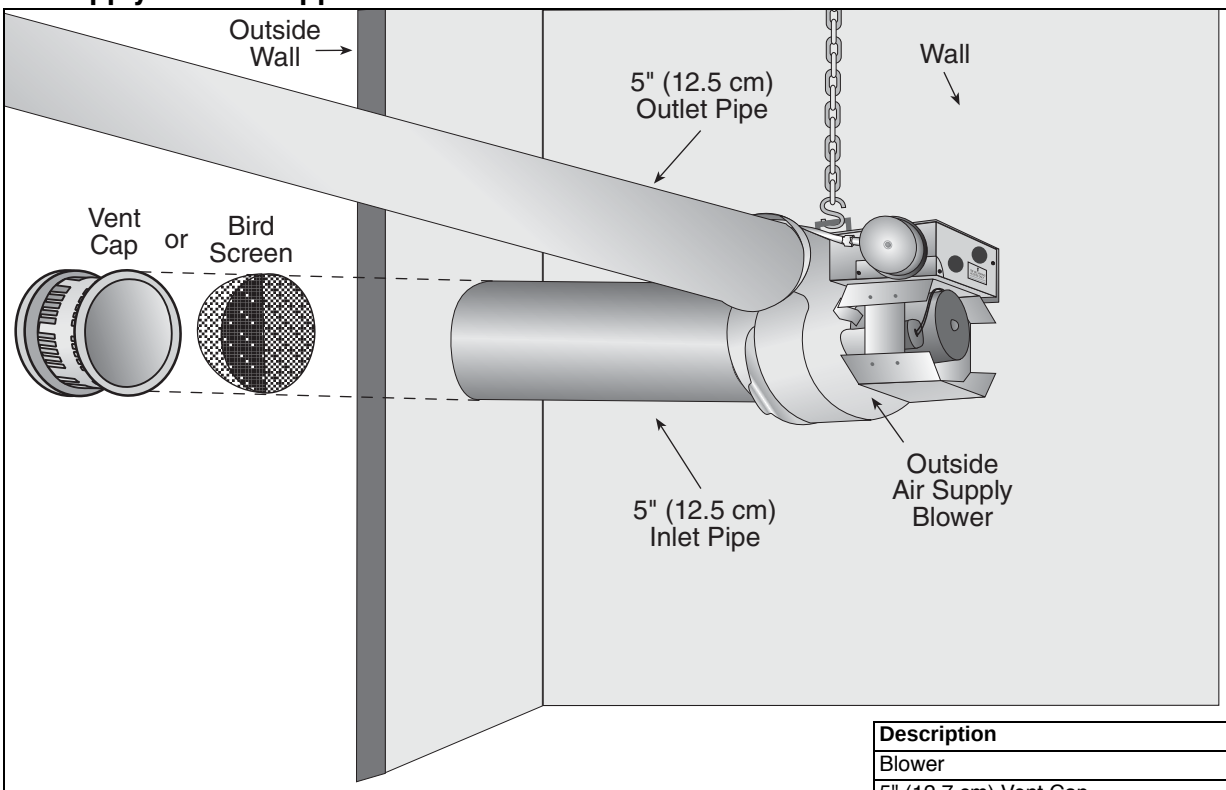

Description	Part Number
Blower	90707501K
5" (12.7 cm) Vent Cap	90502302
6" (15 cm) Bird Screen	01397400
6" (15 cm) Band Clamp	91913703

Pressurized Outside Air Supply

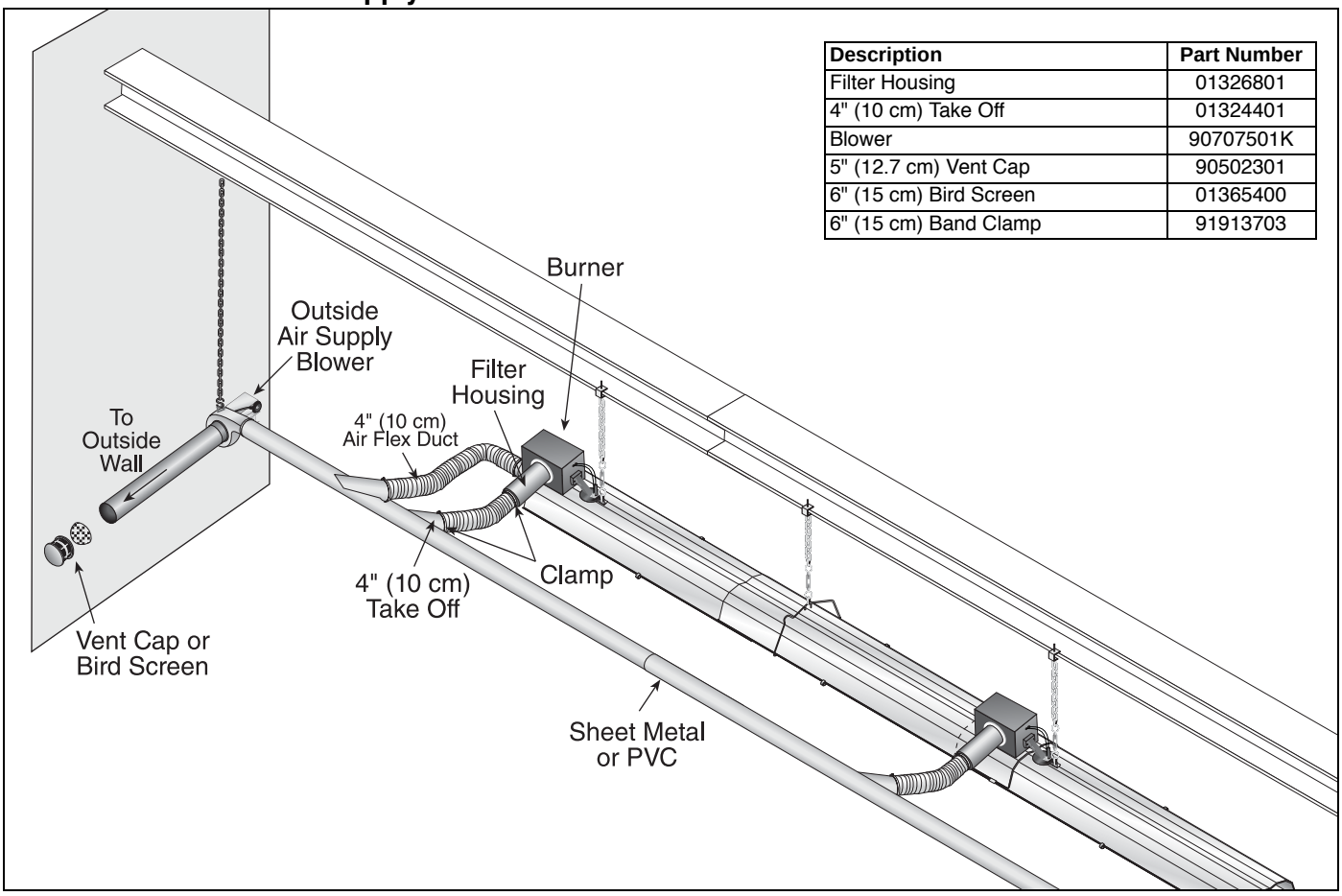

Description	Part Number
Filter Housing	01326801
4" (10 cm) Take Off	01324401
Blower	90707501K
5" (12.7 cm) Vent Cap	90502301
6" (15 cm) Bird Screen	01365400
6" (15 cm) Band Clamp	91913703

Non-Pressurized Outside Air Supply

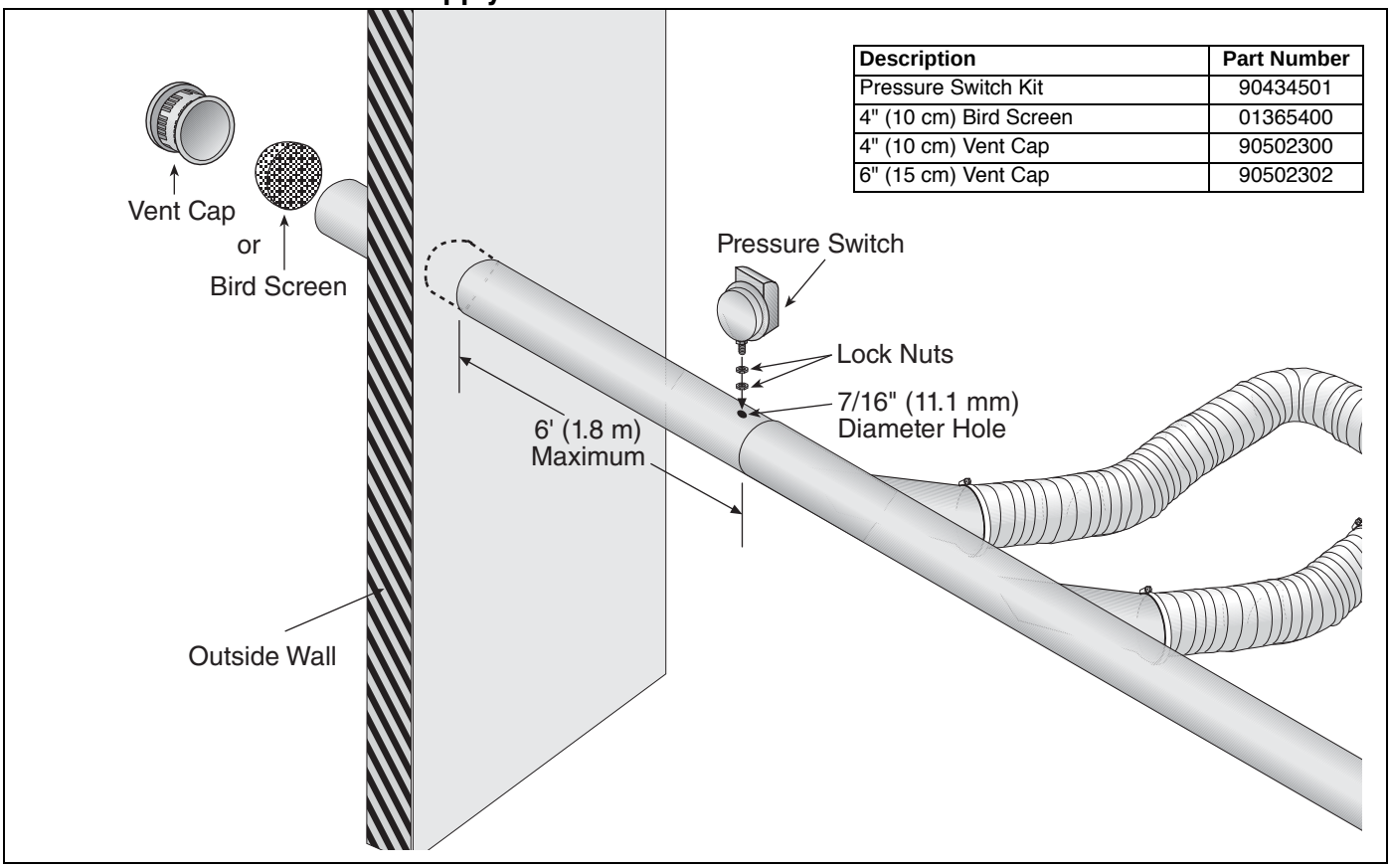

Description	Part Number
Pressure Switch Kit	90434501
4" (10 cm) Bird Screen	01365400
4" (10 cm) Vent Cap	90502300
6" (15 cm) Vent Cap	90502302

GAS CONNECTION

CORRECT POSITIONS

⚠ CAUTION

Product Damage Hazard

Hold gas nipple securely with pipe wrench when attaching gas hose.

Failure to follow these instructions can result in product damage.

Shut-Off Valve (included with gas hose) must be parallel to burner gas inlet. The 3" (8 cm) displacement shown is for the cold condition. This displacement may reduce when the system is fired.

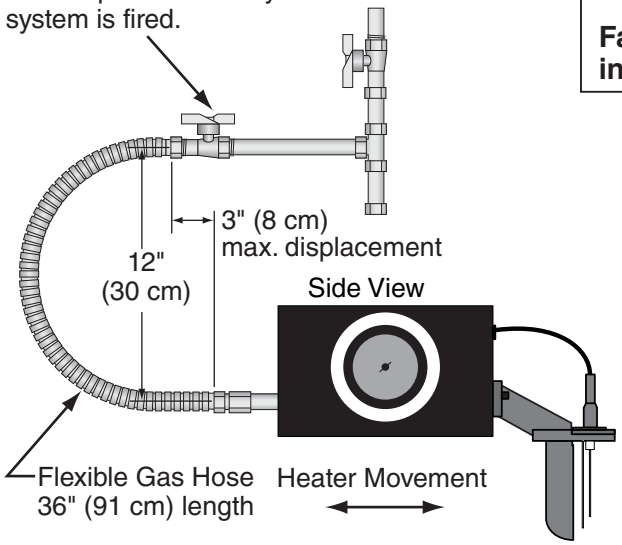

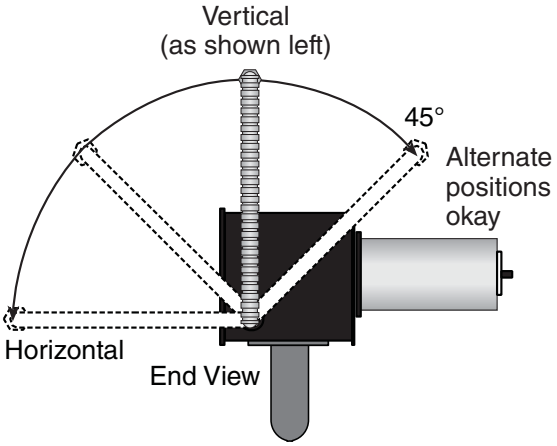

INCORRECT POSITIONS (WRONG INSTALLATION)

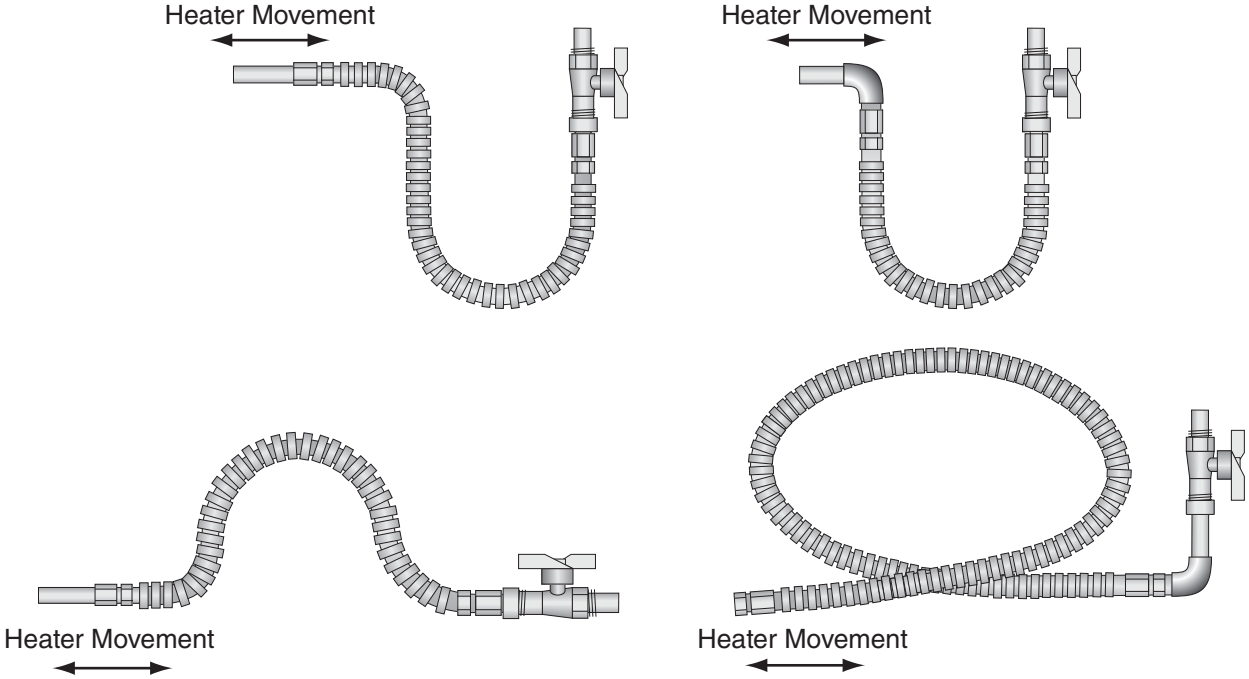

Description	Part Number
1/2" Flexible Stainless Steel Gas Hose (US Models)	91412200
1/2" Rubber (Type 1) Gas Hose (Canadian Models)	91412206

WIRING

One Zone Operation without Control Panel (optional)

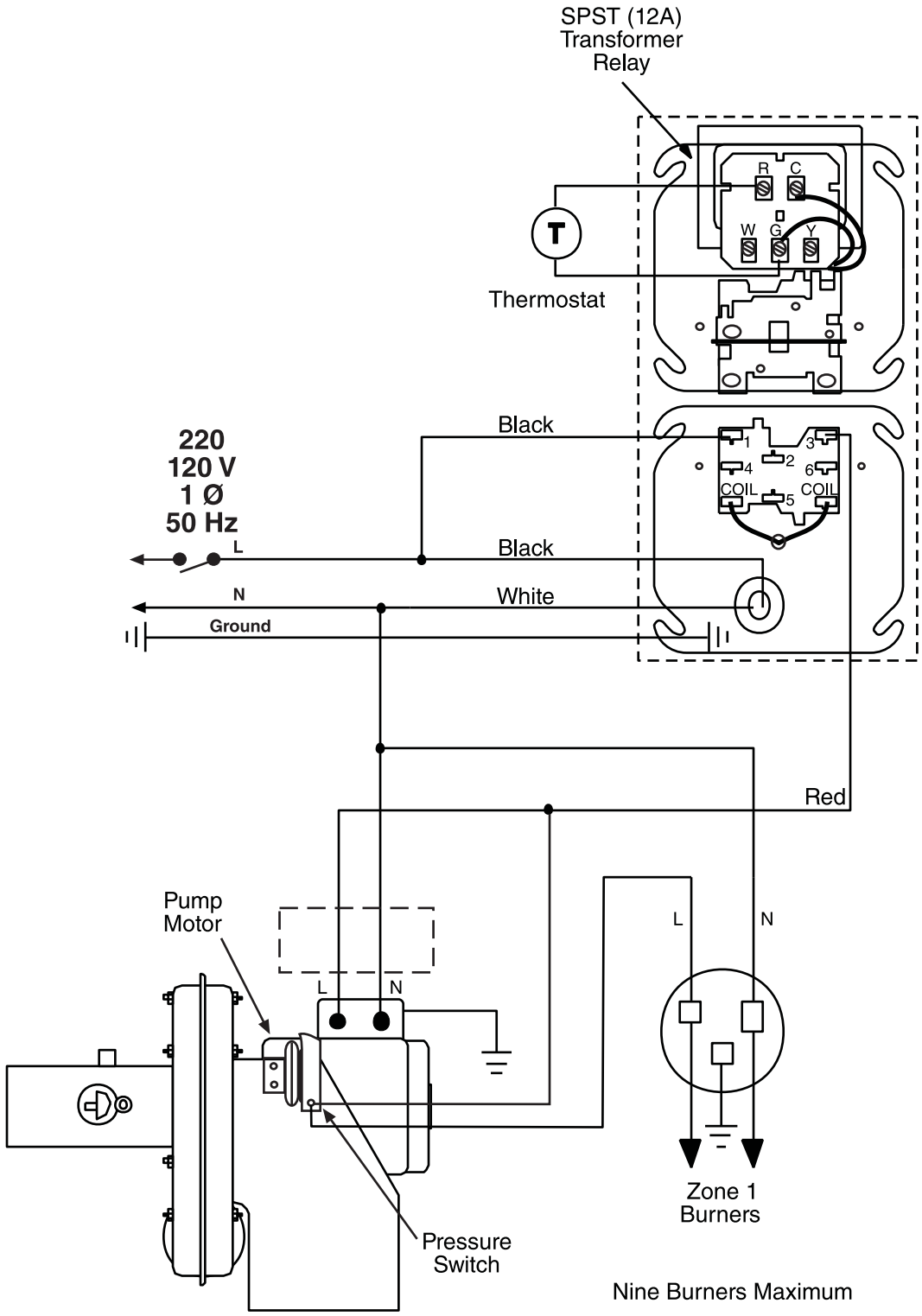

Description	Part Number
SPST Transformer Relay	90417600K

One Zone Operation (with Outside Air Blower) without Control Panel (optional)

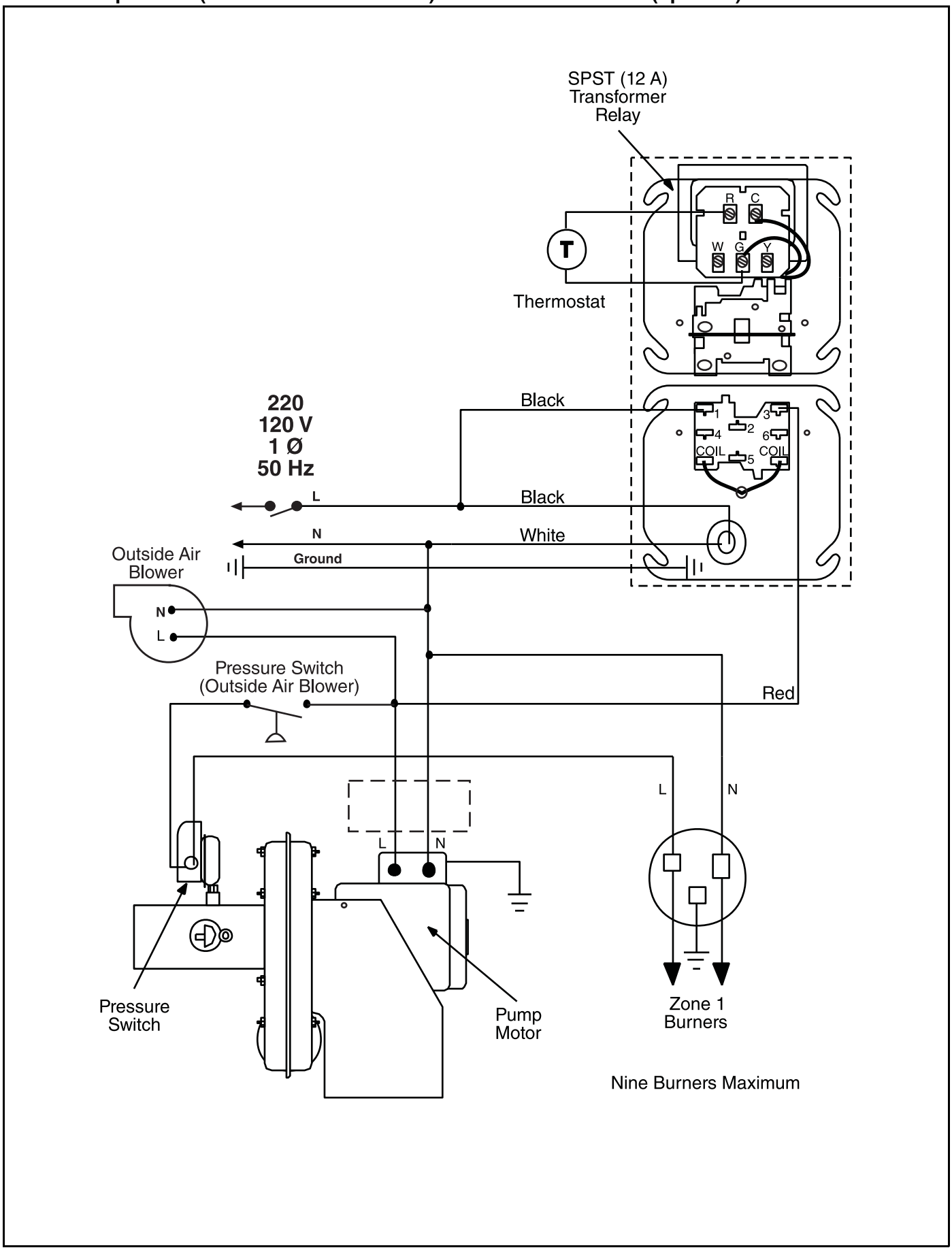

Two Zone Operation without Control Panel (optional)

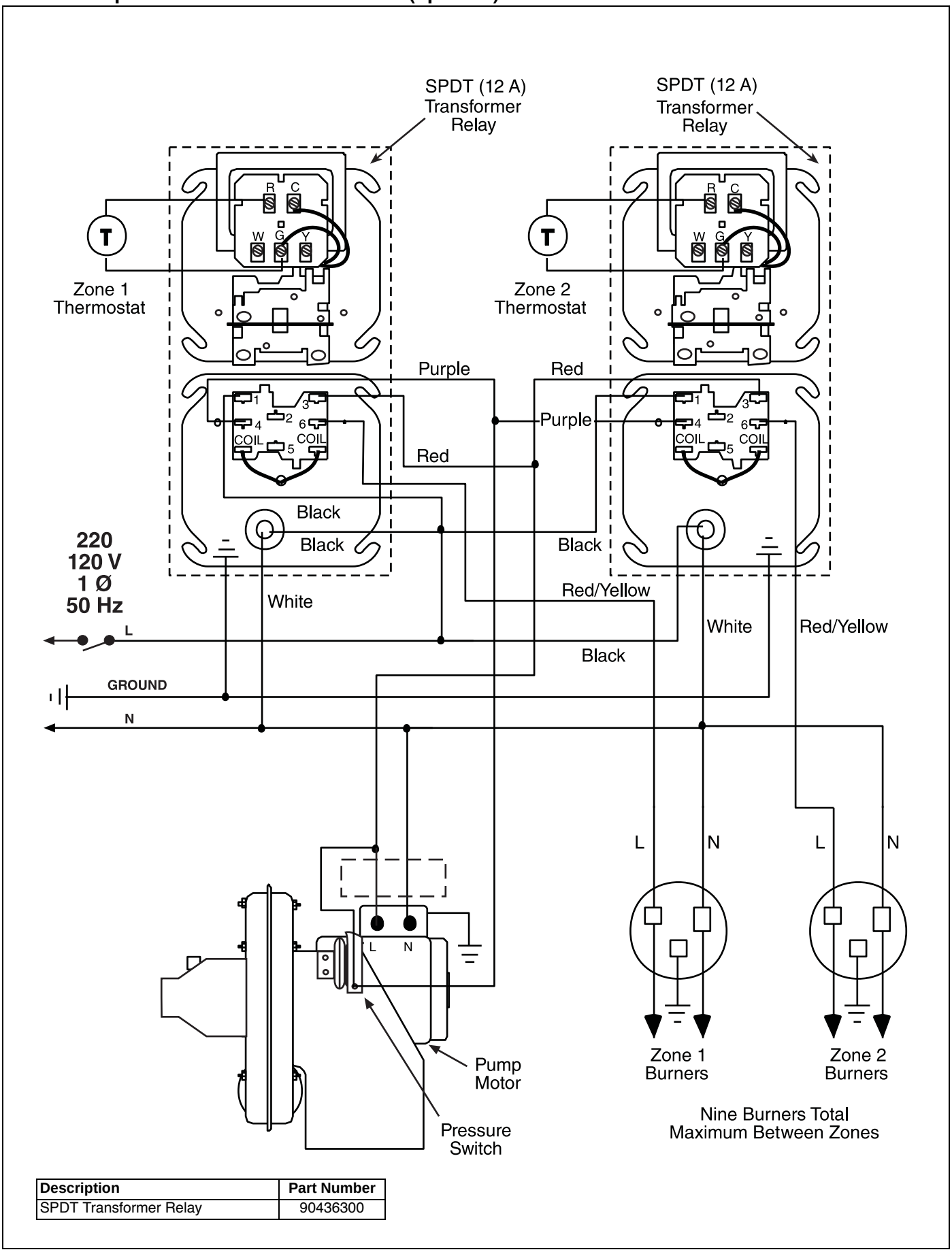

Description	Part Number
SPDT Transformer Relay	90436300

CORAYVAC® Modulating Wiring Diagram [LonWorks® (2-10 Vdc with 500 ohm resistor) optional]

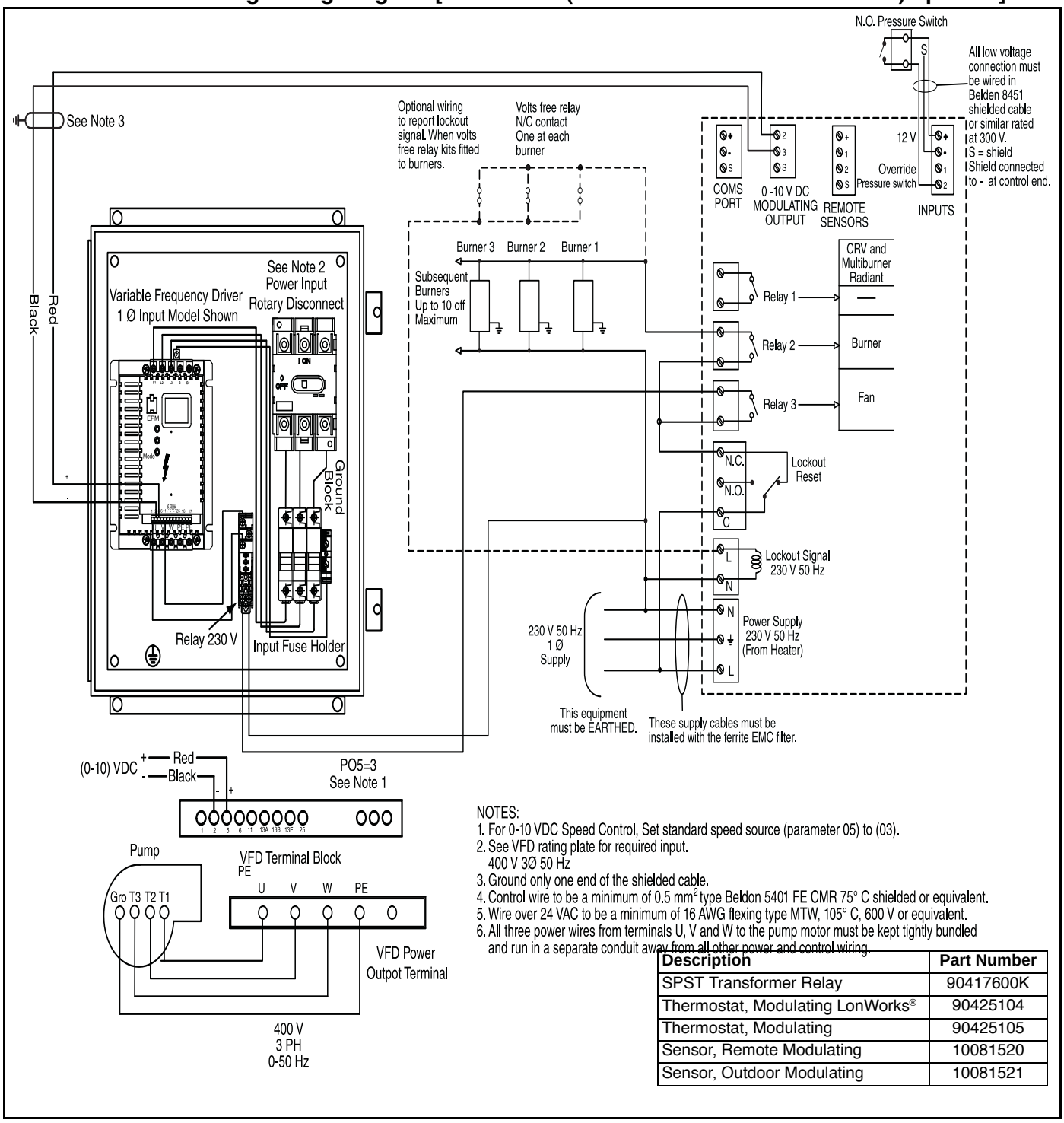

NOTES:
1. For 0-10 VDC Speed Control, Set standard speed source (parameter 05) to (03).
2. See VFD rating plate for required input.
   400 V 3Ø 50 Hz
3. Ground only one end of the shielded cable.
4. Control wire to be a minimum of 0.5 mm^2 type Beldon 5401 FE CMR 75° C shielded or equivalent.
5. Wire over 24 VAC to be a minimum of 16 AWG flexing type MTW, 105° C, 600 V or equivalent.
6. All three power wires from terminals U, V and W to the pump motor must be kept tightly bundled and run in a separate conduit away from all other power and control wiring.

Description	Part Number
SPST Transformer Relay	90417600K
Thermostat, Modulating LonWorks®	90425104
Thermostat, Modulating	90425105
Sensor, Remote Modulating	10081520
Sensor, Outdoor Modulating	10081521

CORAYVAC® Modulating Wiring Diagram [LonWorks® (4-20 mA) optional]

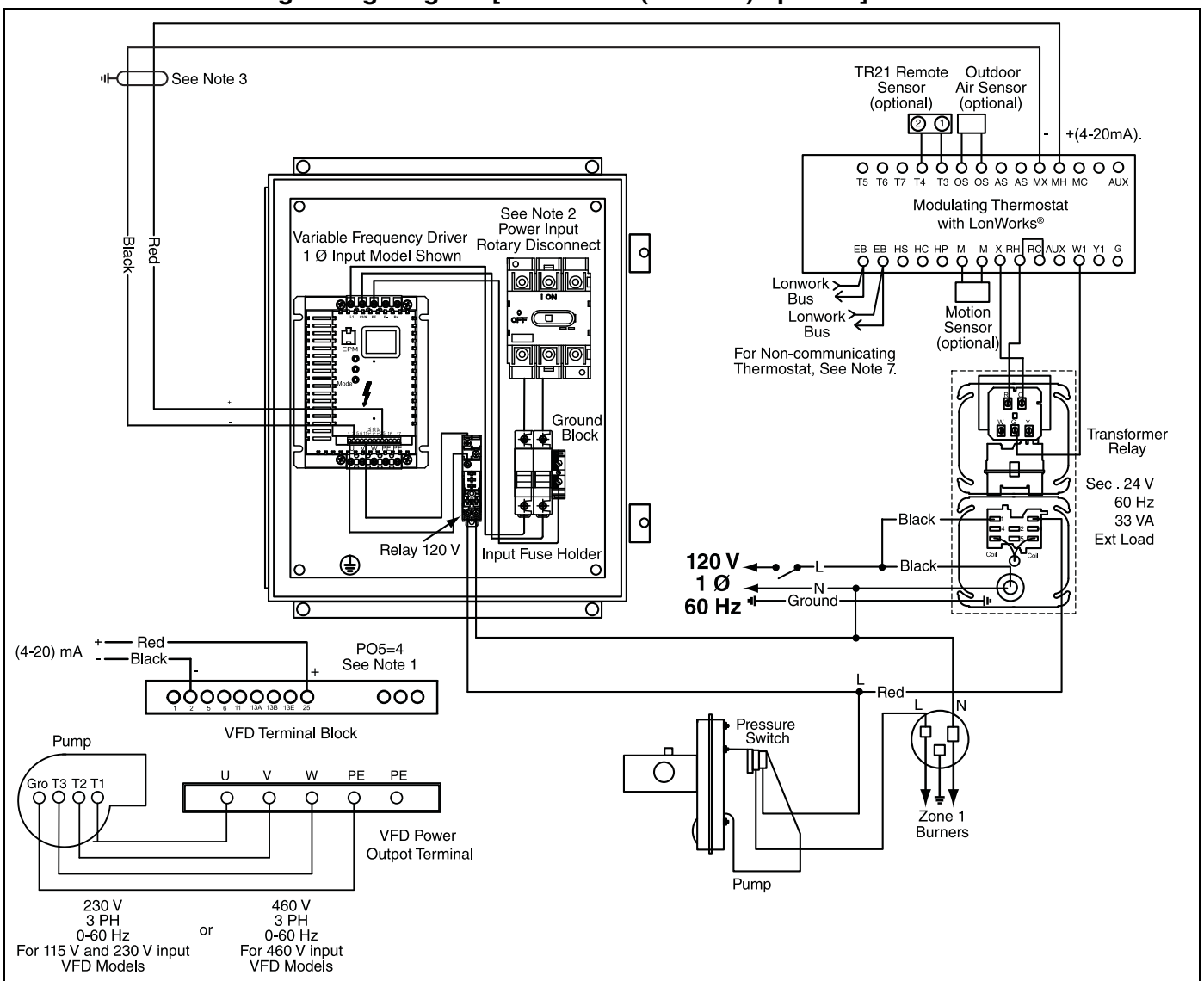

NOTES:
1. For 4-20 mA Speed Control, Set standard speed source (parameter 05) to (04).
2. See VFD rating plate for required input.
   A) 120 V 1 Ø 60 Hz supply for 120 V VFD model.
   B) 230 V 1 Ø 60 Hz supply for 230 V VFD model.
3. Ground only one end of the shielded cable.
4. Control wire to be a minimum of 20 AWG type Belden 5401 FE CMR 75° C shielded or equivalent.
5. Wire over 24 VAC to be a minimum of 16 AWG flexing type MTW, 105° C, 600 V or equivalent.
   A) 120 VAC colors: Phase = Red, Neutral = White, Ground = Green.
   B) 24 VAC colors: Blue
6. All three power wires from terminals U, V and W to the pump motor must be kept tightly bundled and run in a separate conduit away from all other power and control wiring.
7. For Non-communicating thermostats without LonWorks® bus, thermostat terminals marked "EB" will be marked "_ _" and no LonWorks® bus communication wires are used.

Description	Part Number
SPST Transformer Relay	90417600K
Thermostat, Modulating LonWorks®	90425104
Thermostat, Modulating	90425105
Sensor, Remote Modulating	10081520
Sensor, Outdoor Modulating	10081521

CORAYVAC® Modulating with BACnet® Wiring Diagram (optional)

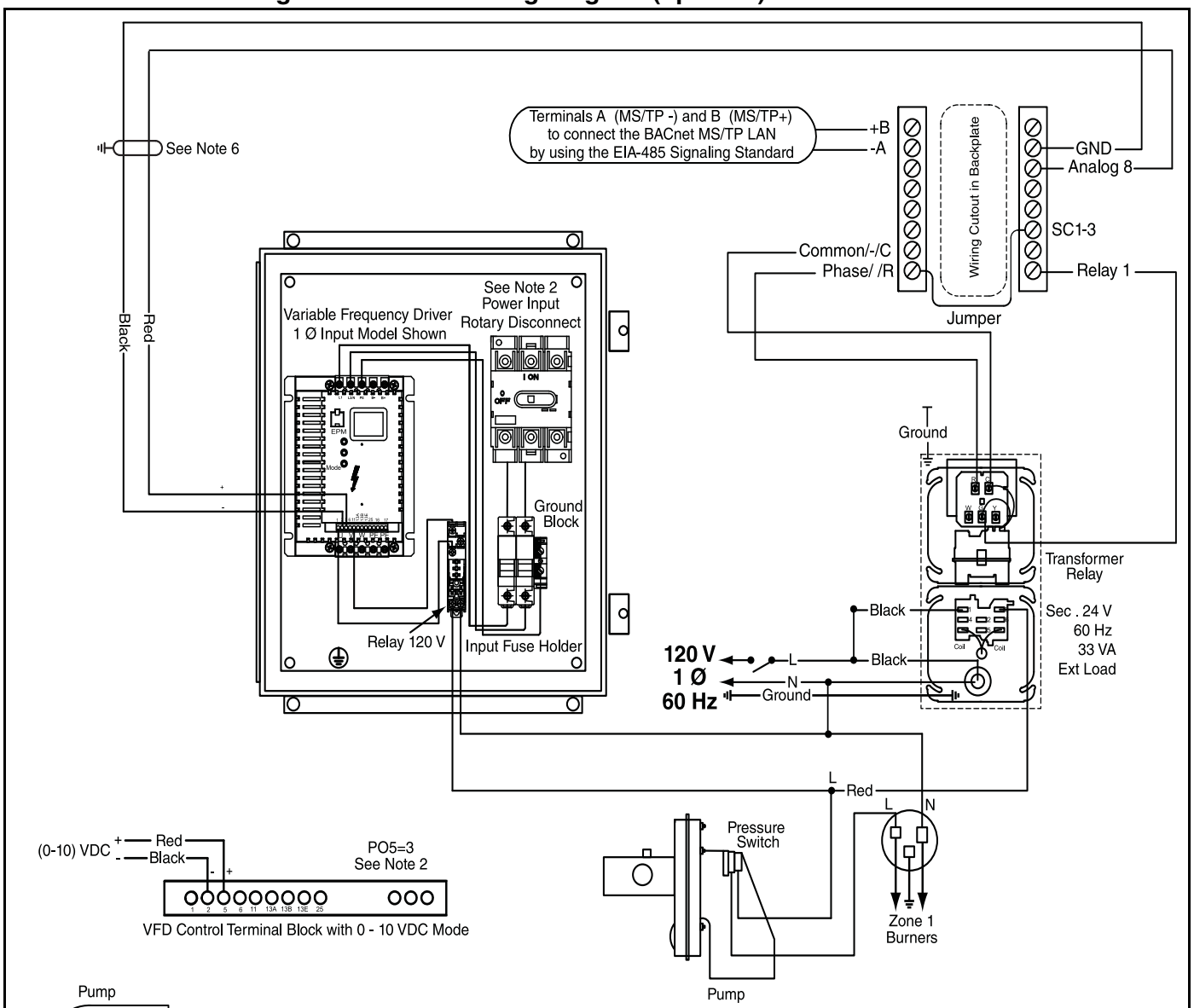

NOTES:

1. A jumper is pre-installed between Phase R (24 VAC) and SC1-3 (24 VAC Relay).
2. For 0-10VDC Speed Control, set standard speed source (parameter 05) to 03.
3. See VFD Rating Plate for Required Input .
   A) 120 V 1 PH 60 HZ Supply for 120V VFD Model.
   B) 230 V 1 PH 60 HZ Supply for 230V VFD Model.
4. Ground only one end of the shielded cable.
5. Control Wire To Be A Minimum of 20 AWG Type Belden 5401FE CMR 75° C Shielded or Equivalent.
6. Wire Over 24 VAC To Be A Minimum of 16 AWG Flexing Type MTW, 105° C, 600V or Equivalent
   A) 120 VAC Colors: Phase =Red, Neutral=White, Ground=Green.
   B) 24 VAC Colors: Blue
7. All three power wires from terminals U, V and W to the pump motor must be kept tightly bundled and run in a separate conduit away from all other power and control wiring.

Description	Part Number
SPST Transformer Relay	90417600K
Thermostat, Modulating BACnet®	90425109

OPTIONAL HEATER ACCESORIES

Classic Cast-Iron Components

⚠WARNING

Severe Injury Hazard

Hang heater with materials with a minimum working load of 750 lbs. (340 kg).

Use special tube and reflector hangers when suspending the schedule 40 steel pipe system.

Schedule 40 steel pipe is heavy and will fall if not supported properly.

Distance between supports must be 7' (2.13 m) or less.

Failure to follow these instructions can result in death, injury or property damage.

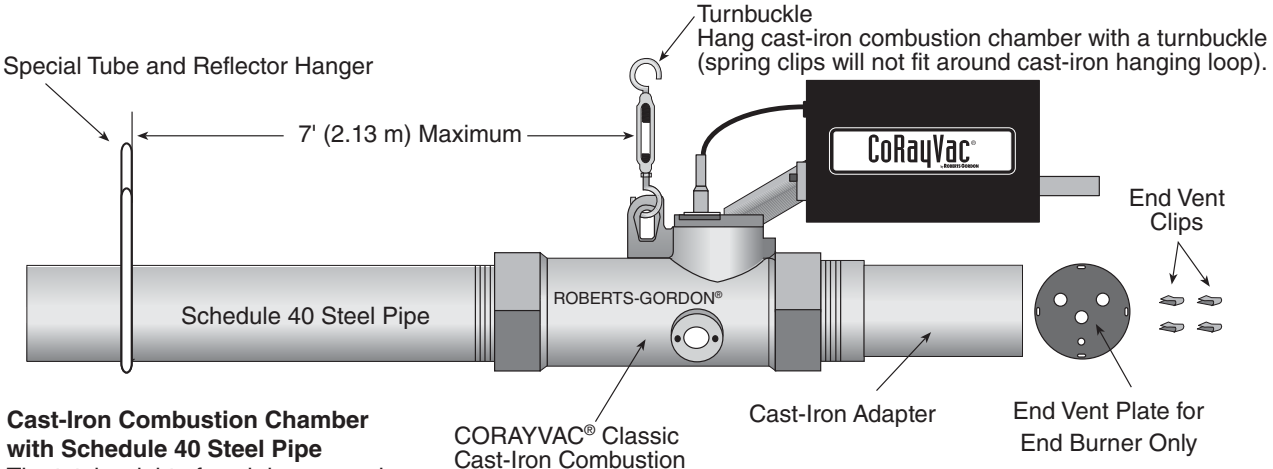

Cast-Iron Combustion Chamber with Schedule 40 Steel Pipe
The total weight of each burner and combustion chamber is 40.25 lbs (18 kg). 4" Schedule 40 pipe weighs 10.9 lbs. (5 kg) per foot.

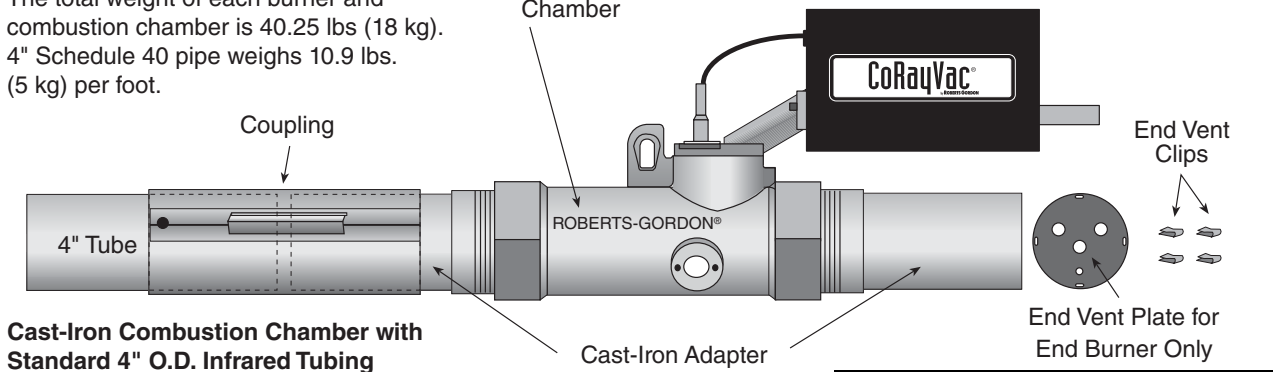

Cast-Iron Combustion Chamber with Standard 4" O.D. Infrared Tubing
The total weight of each burner and combustion chamber is 40.25 lbs (18 kg). 4" O.D. 16 Ga. tubing weighs 2.8 lbs. (1.3 kg) per foot.

Description	Part Number
Special Tube & Reflector Hanger	02790300
Turnbuckle	91903201
Cast-Iron Combustion Chamber	02721200-1P
Cast-Iron Adapter	02722100
Coupling	01312700

Side Reflector Bracket Installation

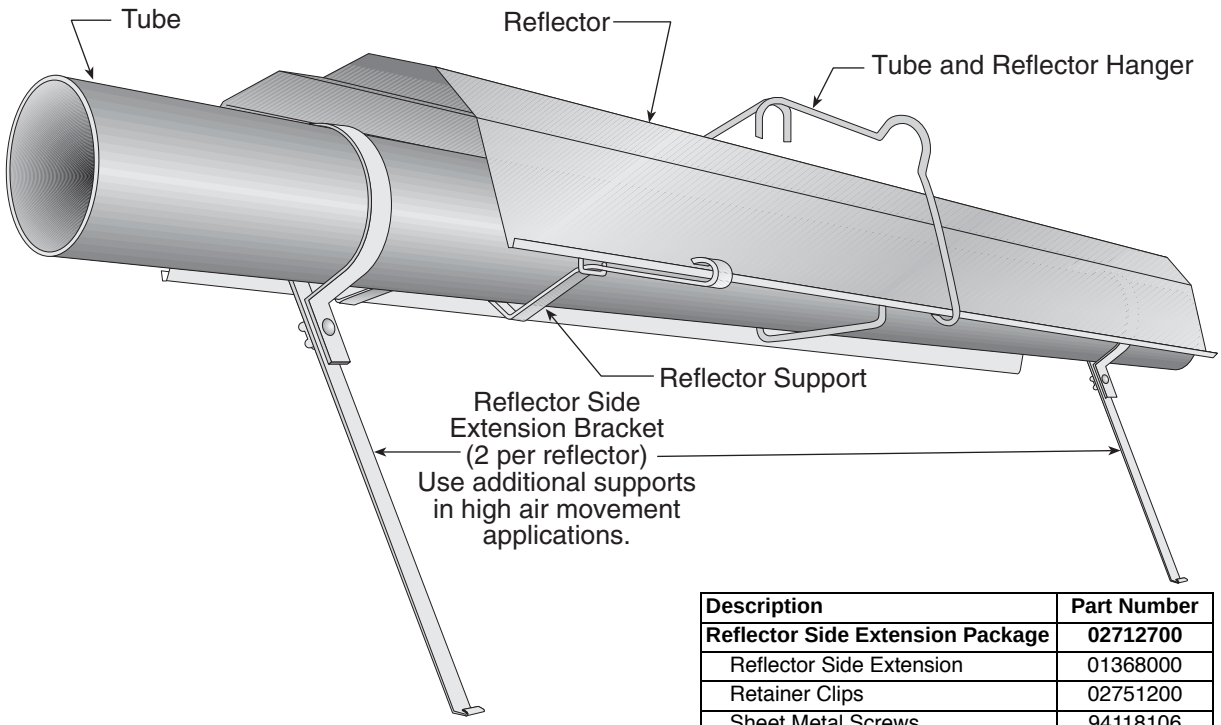

Description	Part Number
Reflector Side Extension Package	**02712700**
Reflector Side Extension	01368000
Retainer Clips	02751200
Sheet Metal Screws	94118106
Order Separately	
Reflector Side Extension Bracket	01329910

Side Reflector Installation

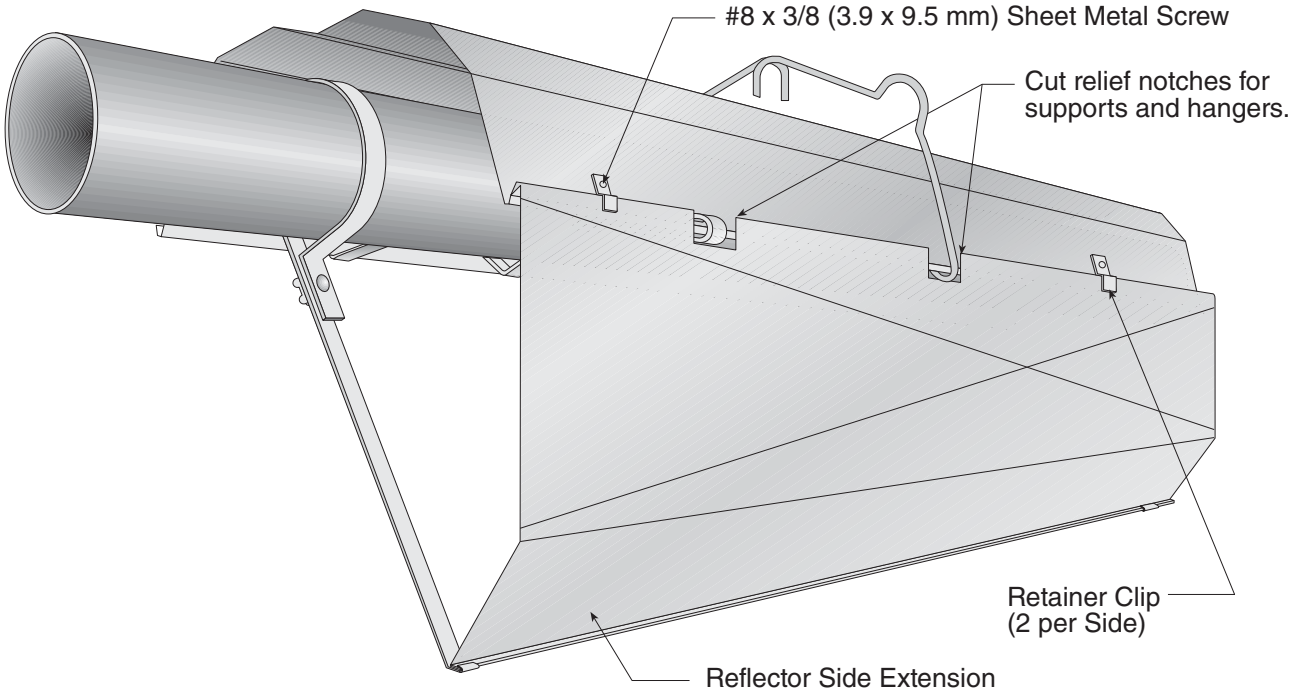

Universal Shield

Universal shields are adjustable aluminum reflectors whose angle and height can be adjusted to direct heat to or away from a desired area.

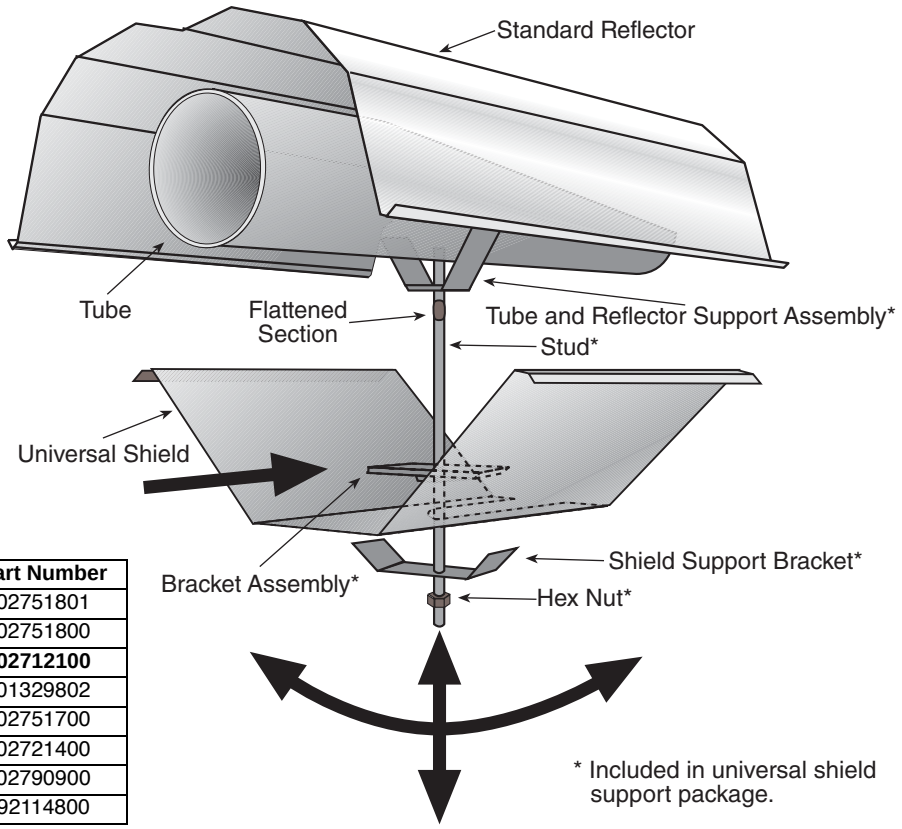

Description	Part Number
Universal Shield	02751801
Universal Shield with Holes	02751800
Universal Shield Support Package	**02712100**
Tube and Reflector Support Assembly	01329802
Universal Shield Support	02751700
Shield Bracket Assembly	02721400
Stud	02790900
Hex Nut	92114800

Barrier Shield

Do not install barrier shield less than 20' (6 m) downstream of any burner.

Do not attach end caps to the ends of the barrier shields. For lengths greater than 8' (2.6 m), use universal shields.

Do not use barrier shields for burner sizes larger than 80,000 Btu/h.

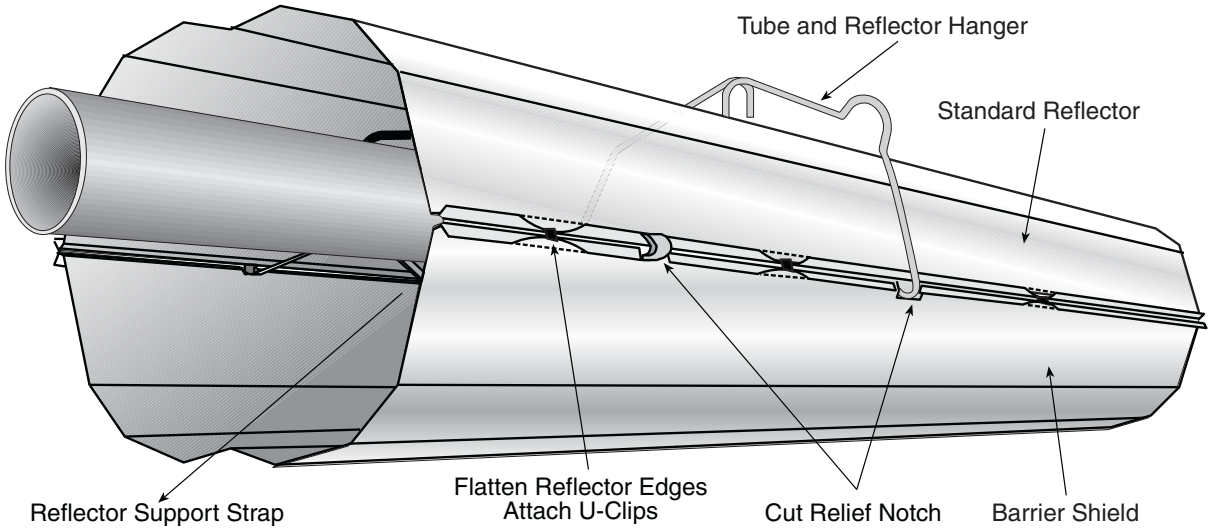

Description	Part Number
Barrier Shield	02750303
U-Clip Package	91107720

Two-Foot Decorative Grille Installation

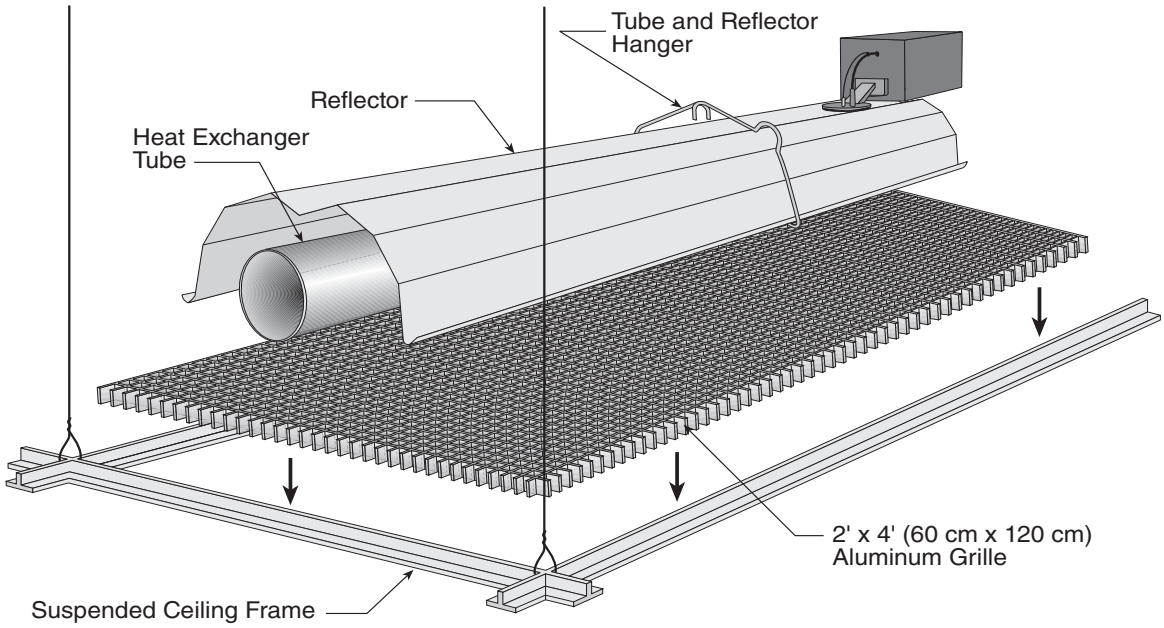

Description	Part Number
Aluminum Grille 2' x 4' (60 cm x 120 cm)	91407000

Frame Shield Installation

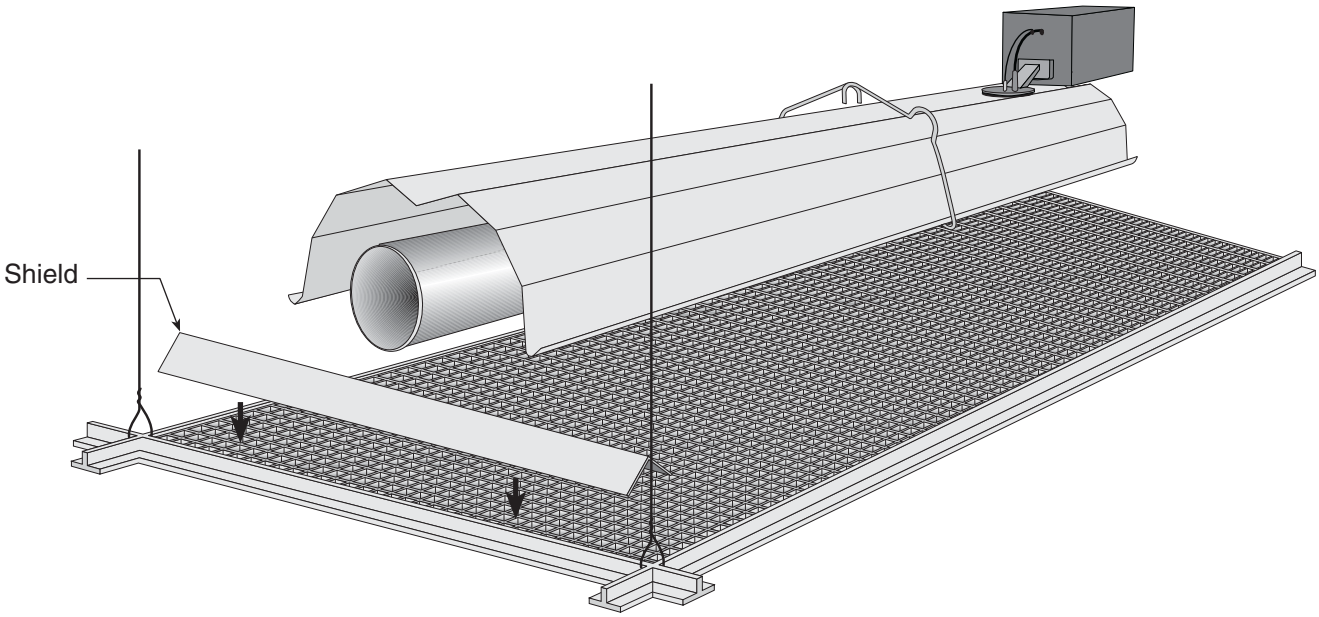

Description	Part Number
Deco Grille Shield	01365900

Reflector Side Extension Installation for Decorative Grilles

NOTE: If the decorative grille system is to be installed in an area with considerable air movement, it is recommended that one #8 x 3/8" sheet metal screw be installed per reflector extension to prevent it from blowing over.

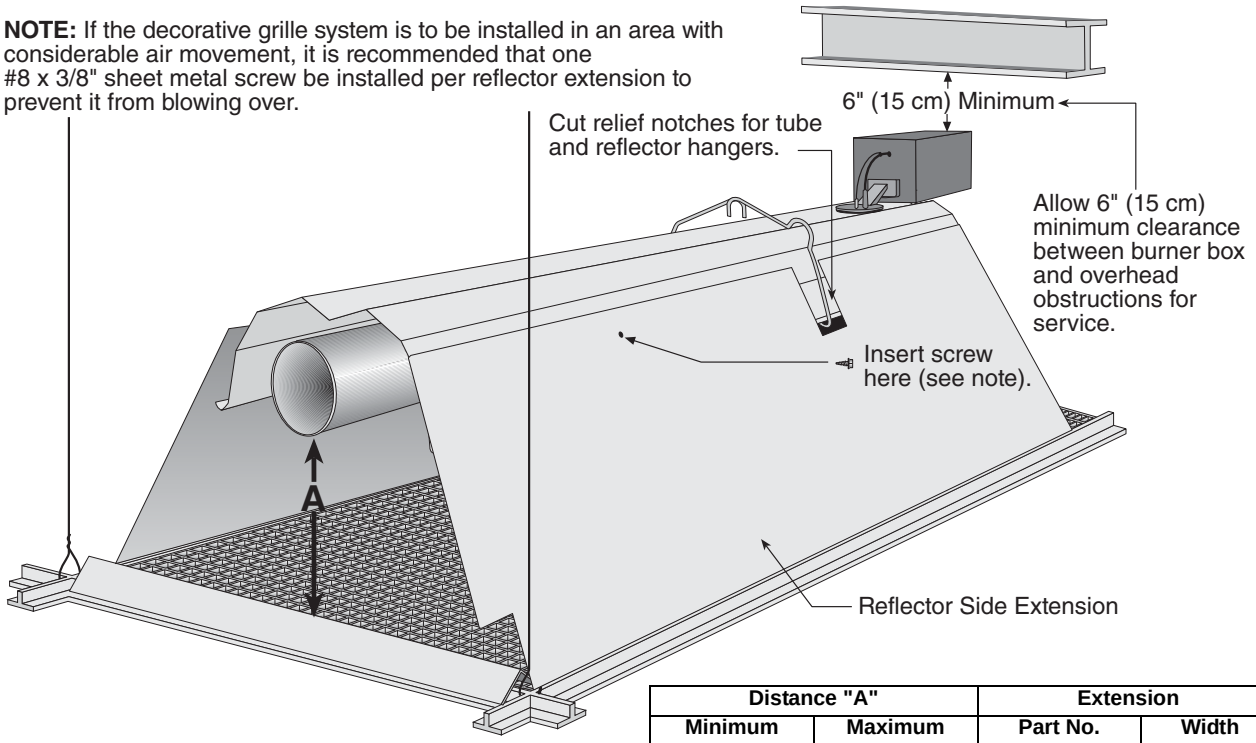

Description	Part Number
Reflector Side Extension	01370412

Distance "A"		Extension	
Minimum	Maximum	Part No.	Width
2" (4 cm)	6" (15 cm)	01370408	8" (20 cm)
6" (15 cm)	10" (26 cm)	01370412	12" (30 cm)
10" (26 cm)	14" (37 cm)	01370416	16" (40 cm)

Protective Grille Silicone Cap Installation

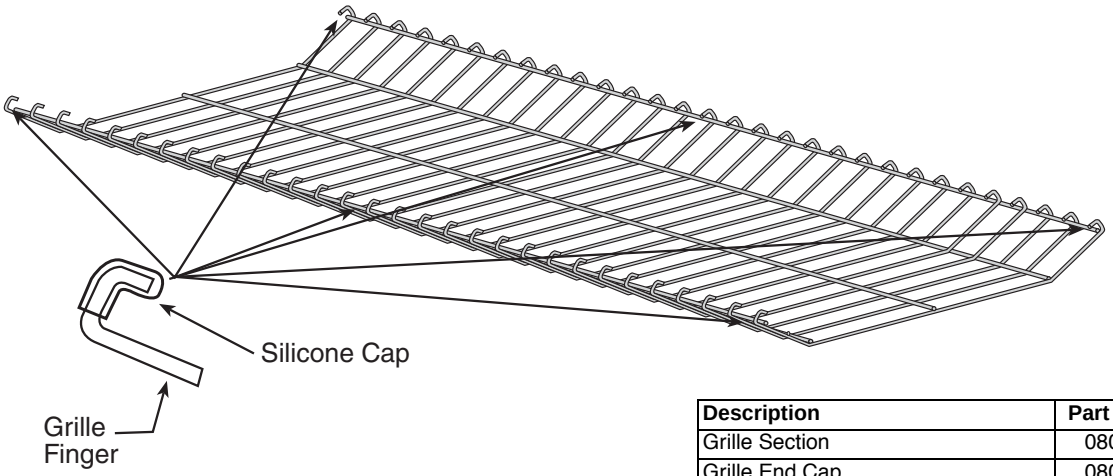

Description	Part Number
Grille Section	08050001
Grille End Cap	08050002
Silicone Cap	91915951-6P

Protective Grille End Cap Installation

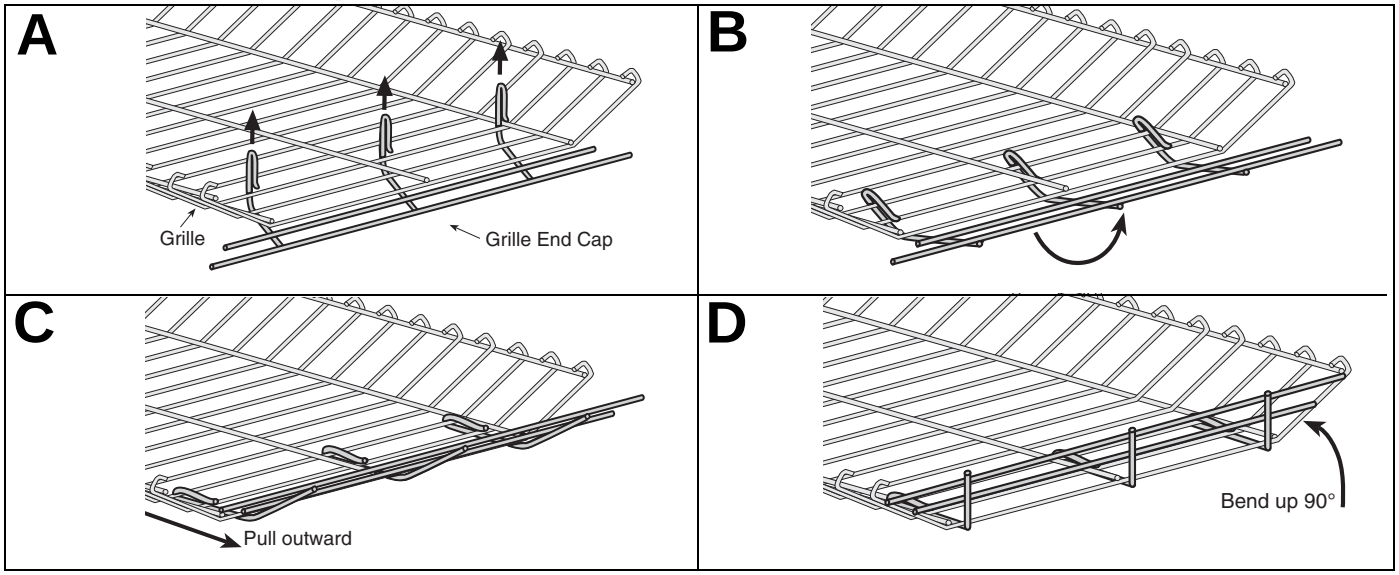

Protective Grille Installation

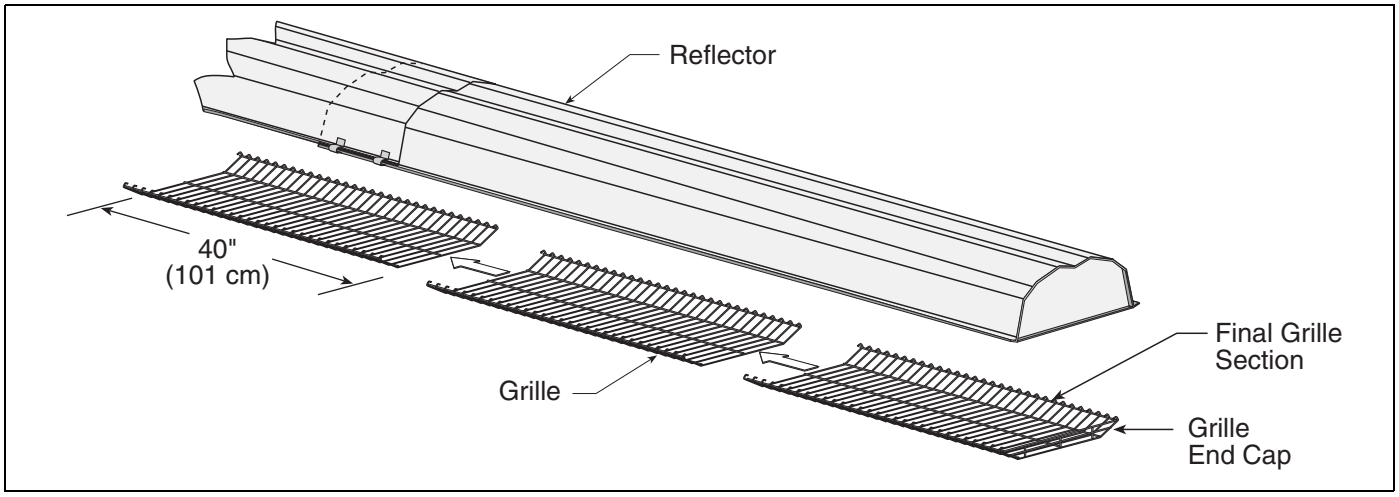

OPTIONAL CONTROLLER ACCESSORIES

ROBERTS GORDON® ULTRAVAC™ Controller Specifications

Standard Enclosure

Construction: 16 gauge painted steel, hinged door, removable knockouts provided.

Dimensions: W x H x D
(in): 14.7 x 17.7 x 3.5
(cm): 37.3 x 45.0 x 8.9

Electrical

Power Supply: 120 V (+/- 10%) 1 Ø, 60 Hz
UL Standard: UL 916 / C22.2 No. 205-M1983

Universal Inputs:
Eight Universal Inputs
Thermistor
0-10 Vdc
4-20m A
Resistance
Dry contact

Analog Output:
One Analog Output 0-10 Vdc

Digital Inputs:
Digital Inputs: Timed, dry contact

Digital Outputs:
Eight Digital Output: Single Pole 3 A 120 Vac

Ports:
RS-485 Communications Bus
RS-232 Direct Connect Bus
RS-232 Modem Socket

ROBERTS GORDON® ULTRAVAC™ Unitary Controller

Standard Enclosure

Construction: 16 gauge painted steel, hinged door, removable knockouts provided.

Dimensions: W x H x D
(in): 14.7 x 17.7 x 3.5
(cm): 37.3 x 45.0 x 8.9

Electrical

Power Supply: 120 V (+/- 10%) 1 Ø, 60 Hz
UL Standard: UL 916 / C22.2 No. 205-M1983

Universal Inputs:
Eight Universal Inputs
Thermistor
0-10 Vdc
4-20m A
Resistance
Dry contact

Analog Output:
One Analog Output 0-10 Vdc

Digital Inputs:
Digital Inputs: Timed, dry contact

Digital Outputs:
Three Relay Outputs: Normally Open Single Pole
Rating: 8 A 120 VAC

Ports:
RS-485 Communications Bus
RS-232 Direct Connect Bus
RS-232 Modem Socket

ULTRAVAC™ BMS Link Controller

Standard Enclosure

Construction: 16 gauge painted steel, hinged door, removable knockouts provided.

Dimensions: W x H x D
(in):14.7 x 17.7 x 3.5
(cm): 37.3 x 45.0 x 8.9

Electrical

Power Supply: 120V (+/-10%) 1 Ø, 60 Hz

Ports:
RS-485 Communications Bus
Ethernet/IP

NEMA 4 Enclosure (P/N 10080302)

Description: NEMA 4 enclosure is sold separately as an option, for ULTRAVAC™ Controller and ULTRAVAC™ BMS Link Controller.
Standard enclosures are field mounted inside the NEMA 4 enclosure.

Construction: 14 gauge painted steel, hinged door with 19" (48.3 cm) x (40.6 cm) 16" window.

Dimensions: W x H x D
(in): 24 x 24 x 9
(cm): 61.0 x 61.0 x 22.9

Protection Rating: NEMA 4, 12

Repeater

Standard Enclosure

Construction: Fabricated in accordance with UL specifications from code gauge steel, NEMA 1.

Finish: Austin screw cover boxes standard construction galvanized steel with ANSI 61 gray polyester powder coating.

Dimensions: W x H x D
(in): 12 x 12 x 4
(cm): 30.5 x 30.5 x 10.5

Electrical

Power Supply: 120 V (+/- 10%) 1 Ø, 60 Hz

Ports:
RS-485 Communications Bus
RS-232 Direct Connect Bus

Temperature Sensors

Indoor Sensor

Dimensions: W x H x D
(in): 2.75 x 4.5 x 1.15
(cm): 7.0 x 11.4 x 2.9

Power: 32 V DC

Operating Temperature Range:
32° to 158° F (0° to 70° C)

Features: LCD temperature display, setpoint adjustment, override button

Outdoor Sensor (P/N 10081501)

Dimensions: W x H x D
(in): 1.4 x 5.3 x 2
(cm): 3.6 x 13.5 x 5.1

Operating Temperature Range:
-40° to 221° F (-40° to 105° C)

Enclosure: NEMA 4 gasketed aluminum LB housing, ½" threaded connection

NEMA 4 Enclosure for Indoor Sensor (P/N 10081510)

Description: NEMA 4 Enclosure is sold separately as an option. The indoor sensor is field mounted inside the NEMA 4 enclosure. Temperature thermistor and LCD temperature display will not operate properly inside the enclosure. LCD display feature should be disabled and use of the NEMA 4 sensor enclosure will require the use of an outdoor sensor (P/N 10081501) in the space to monitor zone temperature.

Dimensions: W x H x D
(in): 6.3 x 3.6 x 1.8
(cm): 16.0 x 9.1 x 4.6

Construction: Polycarbonate enclosure with clear front cover, 4 screw cover closure. 16 gauge galvanized subpanel.

Protection Rating: NEMA 4, 4X

Flammability Rating: UL-94-5V

Line Reactor 480 V / 4 A Output

Construction: Fabricated in accordance with UL specifications from code gauge steel, NEMA 1.

Dimensions:W x H x D
(in): 10 x 8 x 8
(cm): 25 x 20 x 20

Rated Current: 4 A

Volts: 480 V / 3 Ø

Line Reactor 480 V / 4 A Input

Construction: Fabricated in accordance with UL specifications from code gauge steel, NEMA 1.

Dimensions:W x H x D
(in): 10 x 8 x 8
(cm): 25 x 20 x 20

Rated Current: 4 A

Volts: 480 V / 3 Ø

Line Reactor 230 V 3/4 HP Output

Construction: Fabricated in accordance with UL specifications from code gauge steel, NEMA 1.

Dimensions:W x H x D
(in): 10 x 8 x 8
(cm): 25 x 20 x 20

Rated Current: 4 A

Volts: 230 V / 3 Ø

Line Reactor 230 V 2 HP Output

Construction: Fabricated in accordance with UL specifications from code gauge steel, NEMA 1.

Dimensions:W x H x D
(in): 10 x 8 x 8
(cm): 25 x 20 x 20

Rated
Current: 4 A

Volts: 230 V / 3 Ø

Voltage Surge Suppressor 277 / 480 V

Construction:NEMA 2X Enclosure

Volts: 277 / 480 V

Frequency:50/60 Hz

Wiring Size:#12 AWG Standard Wire

Cable Requirements:

As per individual building specification for class of cable to be used. Use copper conductors only.

Check Installation Materials
Switchable Loads

The controller relays are rated for switching loads no greater than 3 A. The total added current load for all 8 relays must not exceed 25 A.

Control Wiring

Shielded cable (four twisted pairs of stranded 24 AWG minimum wire) is required for use with indoor sensors.

Shielded cable (one twisted pair of stranded 18 AWG minimum wire) is required for the outdoor air sensor, VFD signal wiring and pressure switch.

Shielded cable (one twisted pair of stranded 22 AWG minimum wire) is required for RS-485 communications between controllers.

Programming Details

Every controller is pre-programmed for one pump and up to three heating zones. Use a site layout drawing to identify the heating zones.

ULTRAVAC™ Controller

Below is the recommended cable for the various connections for ULTRAVAC™ Controller:

- **Line Power Supply**
  The power connection should be made with cable, size 14 AWG.
- **Eight Digital Output (Relays)**
  The control connection for load of each individual relay should be made with cable, size 16 AWG.
- **Digital Input**
  The wiring connection for the pressure switch should be unshielded cable, size 18 AWG.
- **Indoor Sensor Cable**
  a) Shielded cable - Four twisted pairs of stranded, 24 AWG minimum or equivalent Madison Cable #08CFJ00004; Belden #9681.
  b) Unshielded cable - Four twisted pairs of stranded, 24 AWG minimum or equivalent AMP#219538, #219513; Belden#1585, #1583A.
- **Outdoor Sensor Cable**
  Shielded cable - One twisted pair of 18 AWG minimum or equivalent Belden #8451, #1503A; General Cable #C2514.
- **Communications between Multiple Controllers (RS-485)**
  One twisted pairs of 22 AWG minimum or equivalent shielded cable; Belden #3105A.

ULTRAVAC™ Unitary Controller

Below is the recommended cable for the various connections for ULTRAVAC™ Unitary Controller:

- **Line Power Supply**
  The power connection should be made with cable, size 14 AWG.
- **Three Relay Outputs**
  The control connection for load of each individual relay should be made with cable, size 18 AWG.
- **Digital Input**
  The wiring connection for the pressure switch should be unshielded cable, size 18 AWG.
- **Indoor Sensor Cable**
  a) Shielded cable - Four twisted pairs of stranded, 24 AWG minimum or equivalent Madison Cable #08CFJ00004; Belden #9681.
  b) Unshielded cable - Four twisted pairs of stranded, 24 AWG minimum or equivalent AMP#219538, #219513; Belden#1585, #1583A.
- **Outdoor Sensor Cable**
  Shielded cable - One twisted pair of 22 AWG minimum or equivalent Belden #8451, #1503A; General Cable #C2514.
- **Communications between Multiple Controllers (RS-485)**
  One twisted pairs of 22 AWG minimum or equivalent shielded cable; Belden #3105A.

ULTRAVAC™ BMS Link Controller

Below is the recommended cable for the various connections for ULTRAVAC™ BMS Link Controller:

- **Line Power Supply**
  The power connection should be made with cable, size 18 AWG.
- **Communications between ULTRAVAC™ BMS Link and Multiple Controllers**
  One twisted pairs of 22 AWG minimum or equivalent shielded cable; Belden #3105A.

Variable Frequency Drive (VFD)

Below is the recommended cable for the various connections for VFD:

- **Line Power Supply**
  Input Wire Size Requirements

VFD P/N	Wire Size
VFD75115 or VFD75115N4	12 AWG
VFD75230 or VFD75230N4	14 AWG
VFD75230-3 or VFD75230-3N4	14 AWG
VFD20575 or VFD20575N4	
VFD20230 or VFD20230N4	12 AWG
VFD75460 or VFD75460N4	14 AWG
VFD20460 or VFD20460N4	14 AWG

- **VFD(0-10 Vdc) Speed Reference Control Wiring**
  Shielded cable - one twisted pair of 18 AWG minimum or equivalent Belden #8760.

Repeater

Below is the recommended cable for the various connections for the repeater:

- **Line Power Supply**
  The power connection should be made with cable, size 18 AWG.
- **RS485 Communications**
  One twisted pairs of 22 AWG minimum or equivalent shielded cable; Belden #3105A.

Electrical Installation Requirements of ULTRAVAC™ ControllerULTRAVAC™ Controller must be feeding from a local fused isolator for a total amperage not exceeding 25 A.

- Eight digital outputs for each individual relay must not exceed **3 A**.

NOTES:

- **The total added current load for each individual relay must not exceed 3 A.**
- **The total added current load for all 8 relays must not exceed 25 A.**

Pump Requirements

The pump is powered directly from the Variable Frequency Drive (VFD). The VFD will be energized via an output from the relay board switched through a designated relay.

Variable Frequency Drive Requirements

The VFD must be powered separately from the control enclosure. The 230 V drive power supply must be 230 V, 50-60 Hz, 1 Ø. The 120V drive power supply must be 120 V, 50-60 Hz, 1 Ø. The 480 drive power supply must be 480 V, 50-60 Hz, 3 Ø. The VFD on/off switching is done by an output on the relay board. The 0-10 V signal from the ULTRAVAC™ controller enclosure wired into VFD input relays 5 and 2, will dictate the speed of the pump. The VFD output supply to the pump is 230 V 3 Ø 0-60 Hz for 115 V and 230 V models and is 480 V, 3 Ø, 0-60 Hz for 480 V models. The frequency of the output supply signal to the pump will be varied based on the 0-10 V signal from the control enclosure.

Variable Frequency Drive Mounting

(Standard enclosures only, NEMA 4 enclosure mounting varies by model)

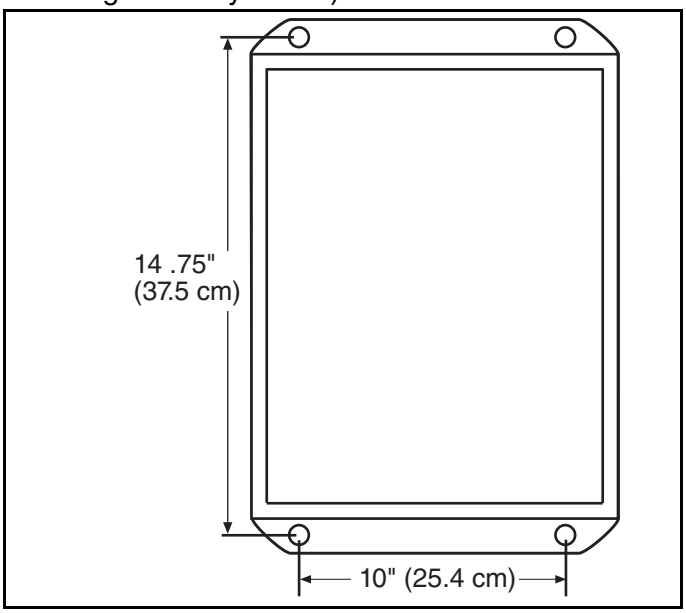

Variable Frequency Drive Components (Factory pre-wiring shown)

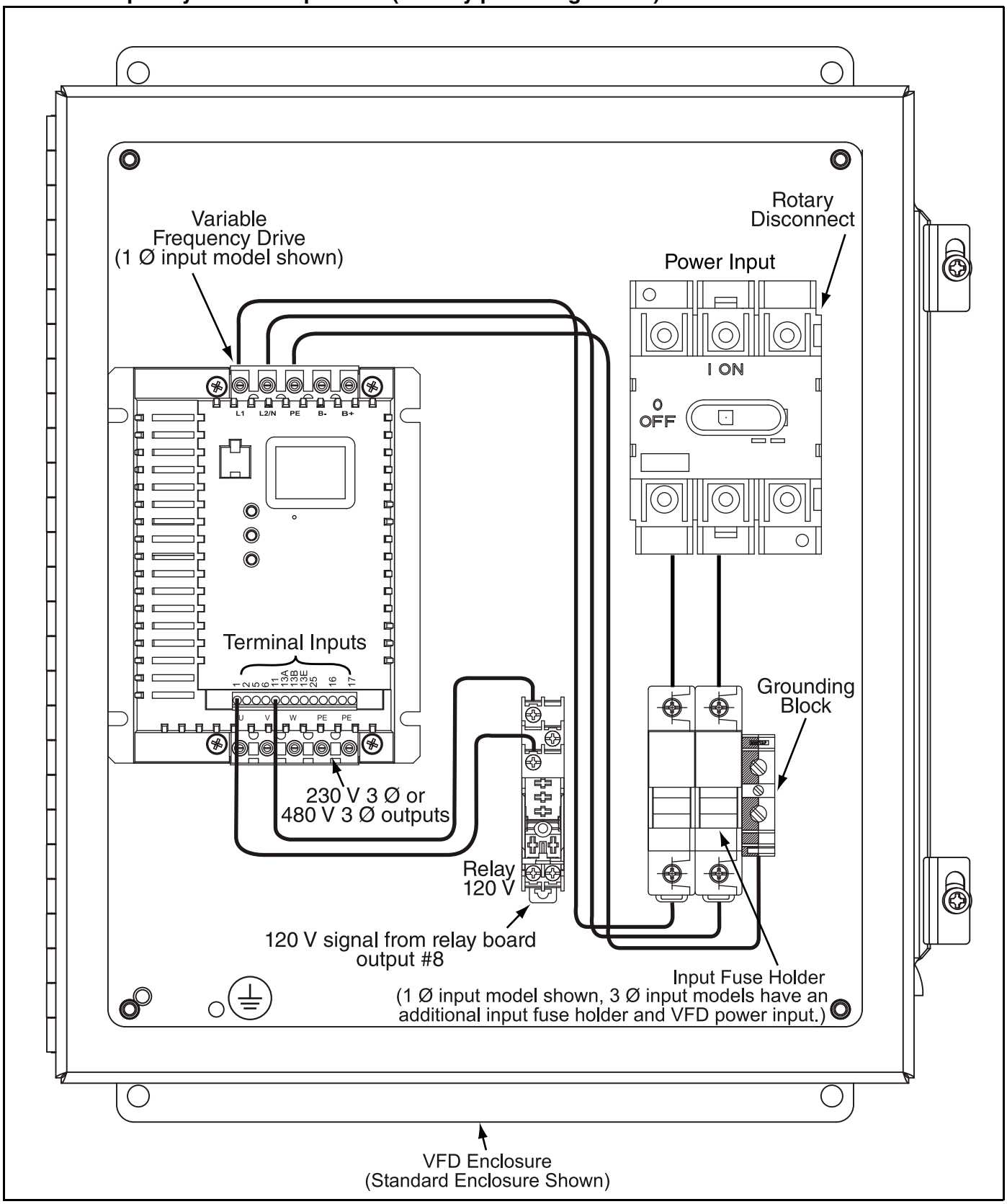

ROBERTS GORDON® ULTRAVAC™ Central Controller External Wiring

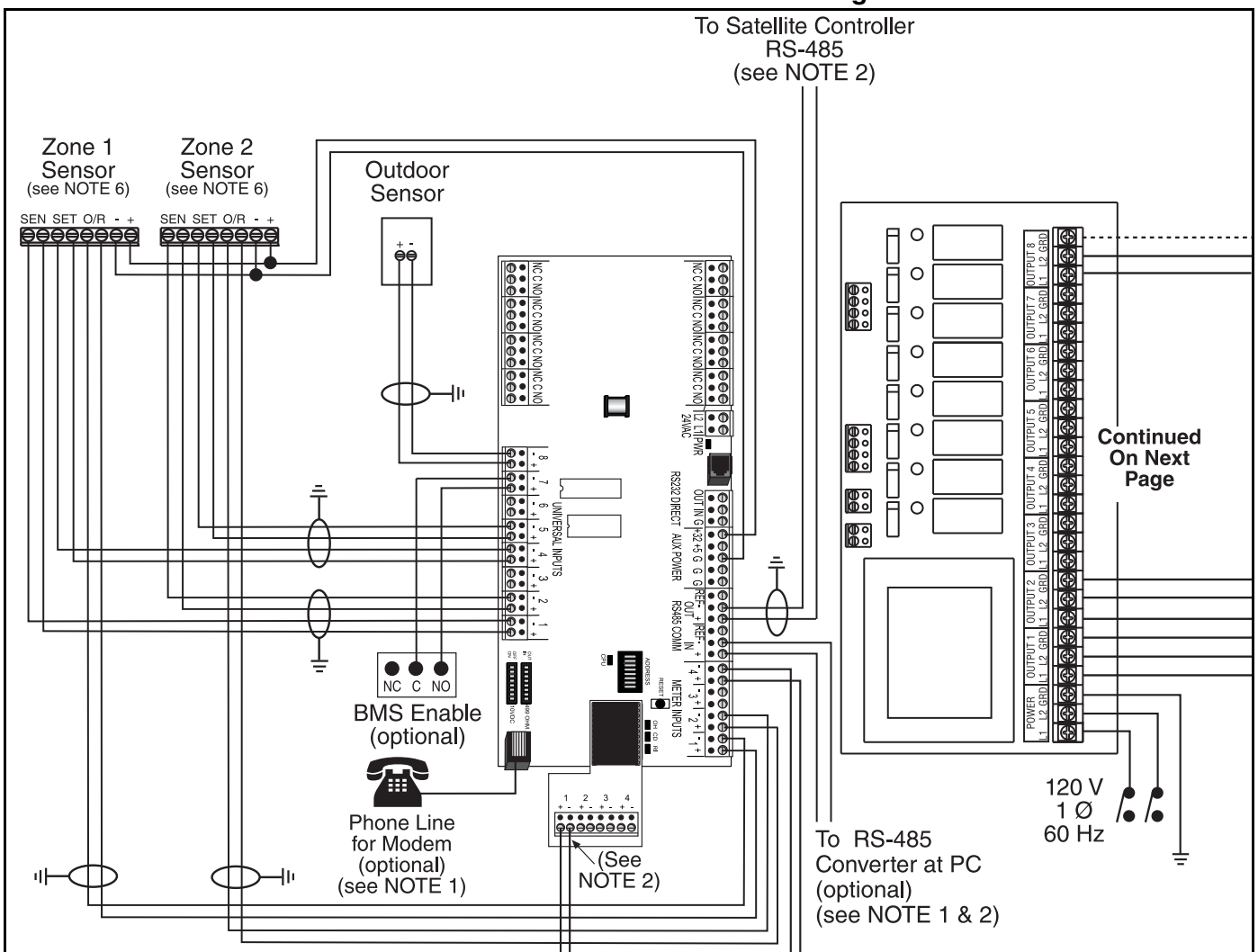

Electrical wiring connections indicated by a dot; ●

Ground Shield (one end only) indicated by;

Separate line and low voltage circuits.
Do not run line voltage wiring through bottom section of enclosure that houses the control board.
Do not run low voltage wiring through top section of enclosure that houses the relay board.
Do not run line and low voltage wiring in the same conduit.

NOTE 1: This diagram applies to the Central Controller (controller #1) only. For all Satellite Controllers see Satellite Controller External Wiring Diagram. Central Controller (controller #1) requires outdoor sensor wiring and either modem, RS-485 converter wiring, or TCP/IP module wiring.

NOTE 2: Twist shield wires for both RS-485 communication cables together and ground at central panel only. On controller #1 only, connect these twisted shield wires to ground. For VFD 0-10 V signal wiring, connect shield wire to ground at the controller only.

NOTE 3: 120 V 1 Ø 50-60 Hz supply for 120 V VFD model. 230V 1 Ø 50-60 Hz supply for 230 V VFD model. 480 V 3 Ø 50-60 Hz supply for 480 V VFD model. See VFD rating plate for required input. **Repetitive cycling of a disconnect or input contactor (more than once every two minutes) may cause damage to the drive.**

NOTE 4: Zone 3 (not shown) wiring is as follows: SEN output to analog input 3; SET output to analog input 6; O/R output to meter input 3; +/- outputs to +32 V/GND inputs. Zone 3 burner control to output 3, L1, L2 and Grd.

NOTE 5: Internal pre-wiring not shown.

NOTE 6: Wiring from 32 V terminals on the controller to sensor power terminals "+" and "-" is polarity sensitive.

NOTE 7: All three power output wires from terminals U, V, and W to the pump motor must be kept tightly bundled and run in a separate conduit away from all other power and control wiring.

ROBERTS GORDON® ULTRAVAC™ Central Controller External Wiring (continued)

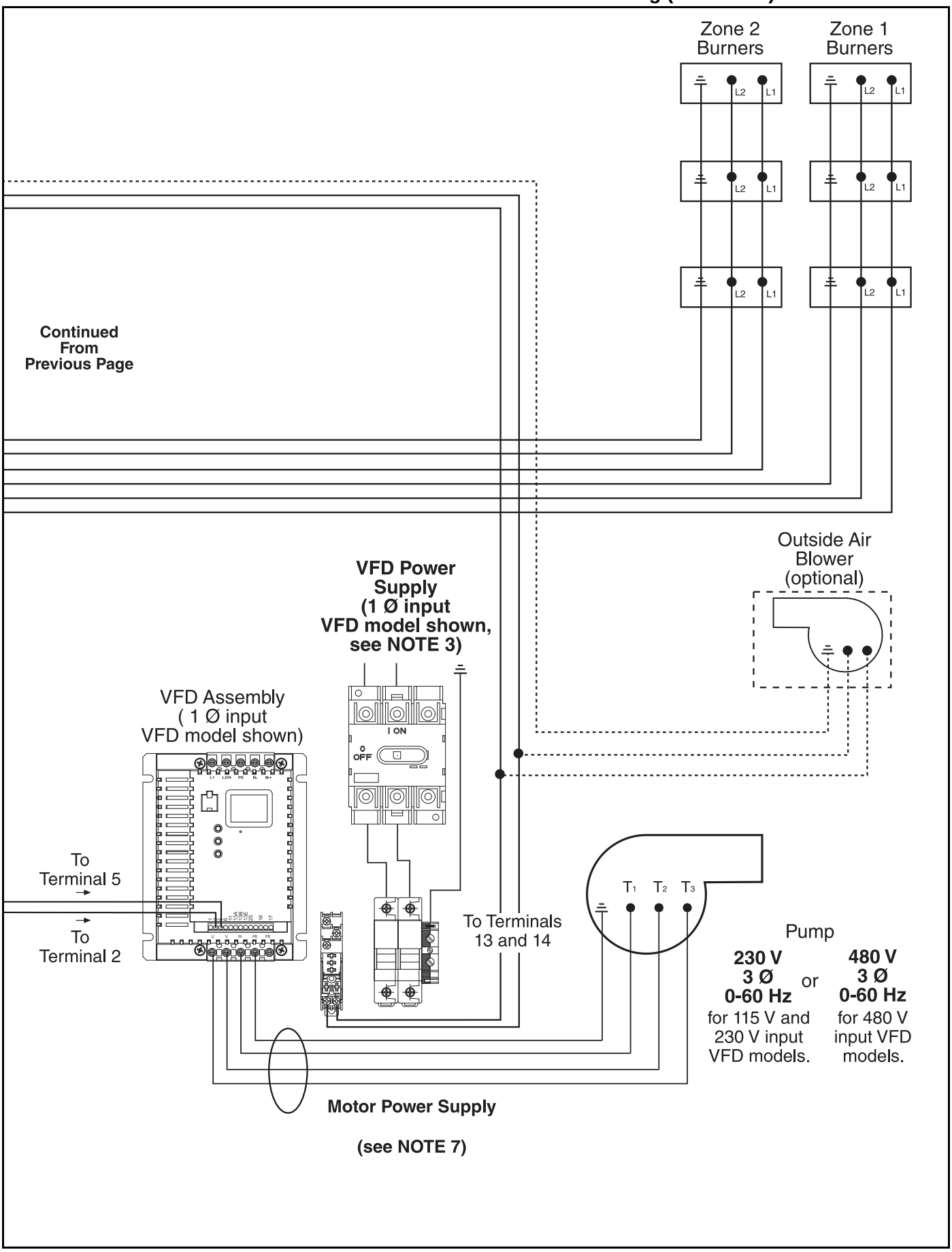

ROBERTS GORDON® ULTRAVAC™ Satellite Controller External Wiring

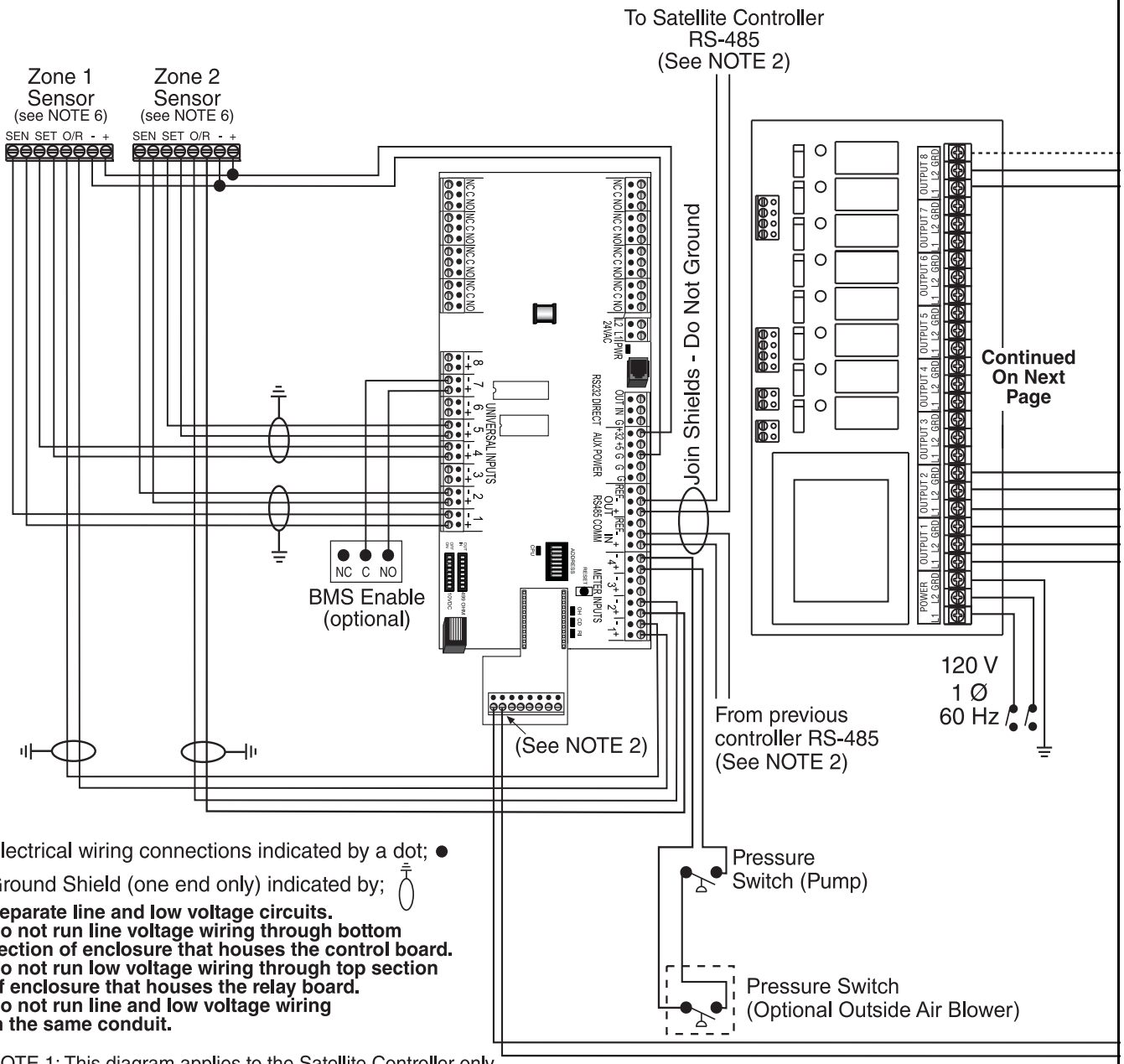

Electrical wiring connections indicated by a dot; ●

Ground Shield (one end only) indicated by;

Separate line and low voltage circuits.
Do not run line voltage wiring through bottom section of enclosure that houses the control board.
Do not run low voltage wiring through top section of enclosure that houses the relay board.
Do not run line and low voltage wiring in the same conduit.

NOTE 1: This diagram applies to the Satellite Controller only.
The Satellite Controller does not require modem, RS-485 converter wiring to the PC, TCP/IP module wiring, or outdoor sensor wiring.
For Central Controller see Central Controller External Wiring Diagram.

NOTE 2: Twist shield wires for both RS-485 communication cables together and ground at central panel only. On controller #1 only, connect these twisted shield wires to ground. For VFD 0-10 V signal wiring, connect shield wire to ground at the controller only.

NOTE 3: 120 V 1 Ø 50-60 Hz supply for 120 V VFD model. 230V 1 Ø 50-60 Hz supply for 230 V VFD model. 480 V 3 Ø 50-60 Hz supply for 480 V VFD model. See VFD rating plate for required input. **Repetitive cycling of a disconnect or input contactor (more than once every two minutes) may cause damage to the drive.**

NOTE 4: Zone 3 (not shown) wiring is as follows: SEN output to analog input 3; SET output to analog input 6;
O/R output to meter input 3; +/- outputs to +32 V/GND inputs. Zone 3 burner control to output 3, L1, L2 and Grd.

NOTE 5: Internal pre-wiring not shown.

NOTE 6: Wiring from 32 V terminals on the controller to sensor power terminals "+" and "-" is polarity sensitive.

NOTE 7: All three power output wires from terminals U, V, and W to the pump motor must be kept tightly bundled and run in a separate conduit away from all other power and control wiring.

ROBERTS GORDON® ULTRAVAC™ Satellite Controller External Wiring (continued)

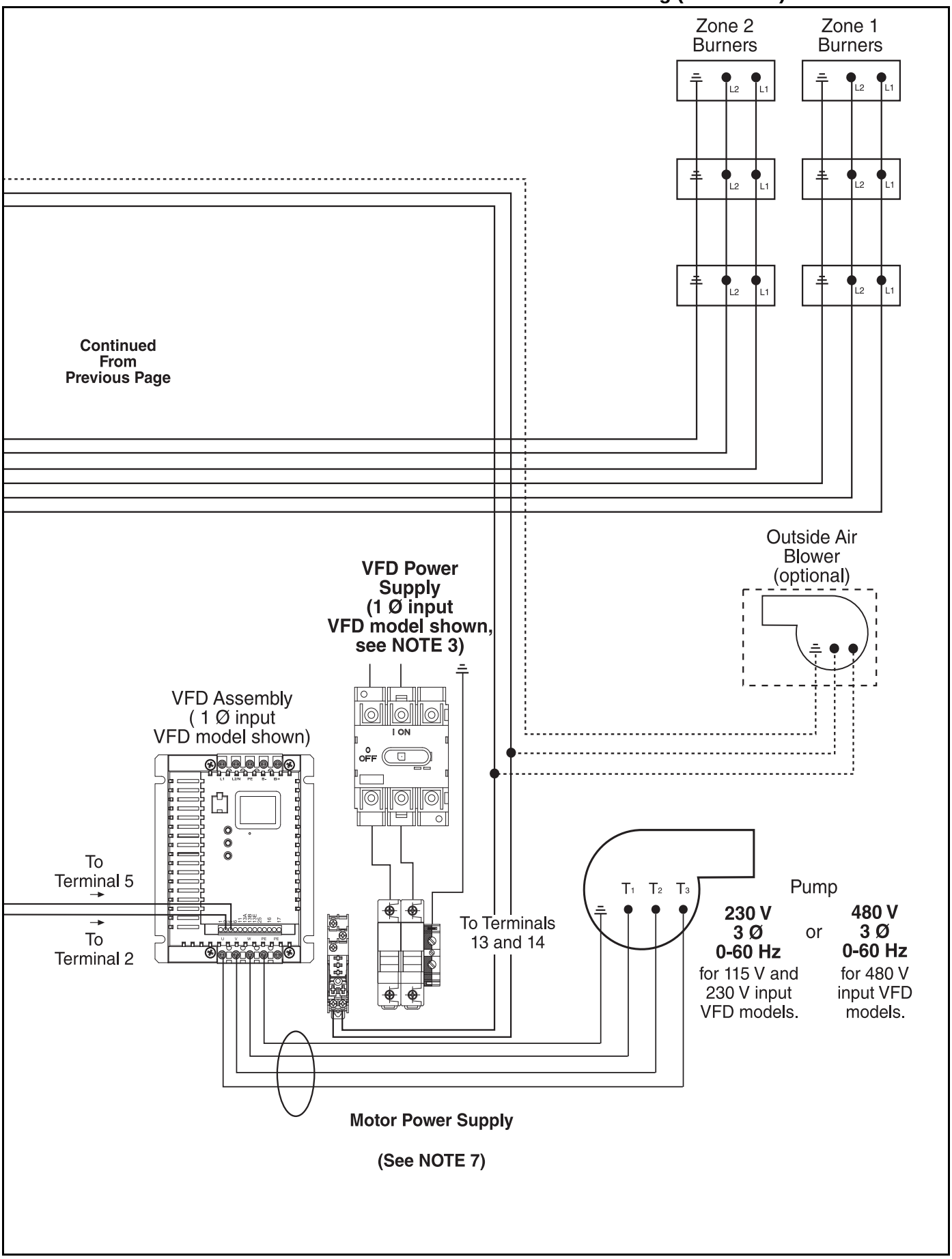

ULTRAVAC™ Communications

One ROBERTS GORDON® ULTRAVAC™ Controller per building (called the "central controller") must have equipment for remote communications to a PC. This equipment consists of either a modem chip, an RS-485 converter, or a TCP/IP communications module.

For remote **on-site and off-site** control and system status viewing, the central controller (controller #1) is fitted with a **modem chip**.

If only remote **on-site** control and system status viewing is required, two controller communications interface devices are available: an **RS-485 converter** or a **TCP/IP communication module.**

An RS-485 converter is installed at a single PC, this PC can interface with any controller on the network of ULTRAVAC™ controllers. The RS-485 converter at the PC is wired directly to controller #1 using shielded twisted pair communication wiring.

To interface with ULTRAVAC™ controllers through a Local Area Network (LAN), a TCP/IP Communication module is installed at controller #1. Controller #1 is wired to the LAN by an Ethernet cable. Any computer on the LAN that has ULTRAVAC™ software installed can communicate with the controllers. Appropriate precautions must be taken to protect the Ethernet wiring from any possible electrical interference (noise) caused by surrounding machinery or equipment.

If multiple ULTRAVAC™ controllers are being used, the additional controllers communicate to controller #1 through communication wiring arranged in-series from one controller to the next.

Modem Location

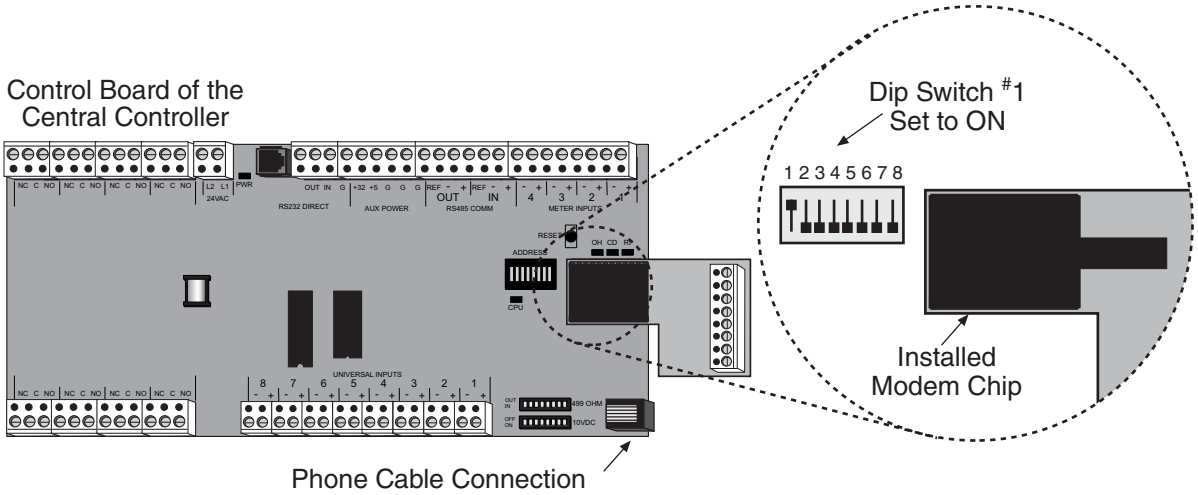

Description	Part Number
Modem Chip	10080142

Dedicated Phone Line for Central Controller Modem

The Central Controller is fitted with a modem chip. To use the modem, the controller must have a phone line for modem communications. Install a phone line near the location of the Central Controller. The phone cable is plugged into the phone connection in the corner of the control board. If the modem option is not used for everyday communication to the controller(s), it can still be plugged into a phone line for troubleshooting or programming assistance. Contact your local ROBERTS GORDON® independent distributor for details.

If multiple ULTRAVAC™ controllers are being used, the additional controllers communicate to controller #1 through RS-485 communication wiring arranged in-series from one controller to the next. This allows multiple controllers to be controlled from a PC through a single communication package at the central controller.

RS-485 Converter for Central Controller

For remote on-site viewing of system status and settings of any controller, use the RS-485 converter to connect a single PC (9 pin serial port) to the RS-485 terminals on the Central Controller. This will allow communication between one PC and any of the ULTRAVAC™ controllers on the network. Wiring between the RS-485 converter to the controller should not be more than 400' (122 m) in length.

If multiple ULTRAVAC™ controllers are being used, the additional controllers communicate to controller #1 through RS-485 communication wiring arranged in-series from one controller to the next. This allows multiple controllers to be controlled from a PC through a single communication package at the central controller.

RS-485 PC Connection

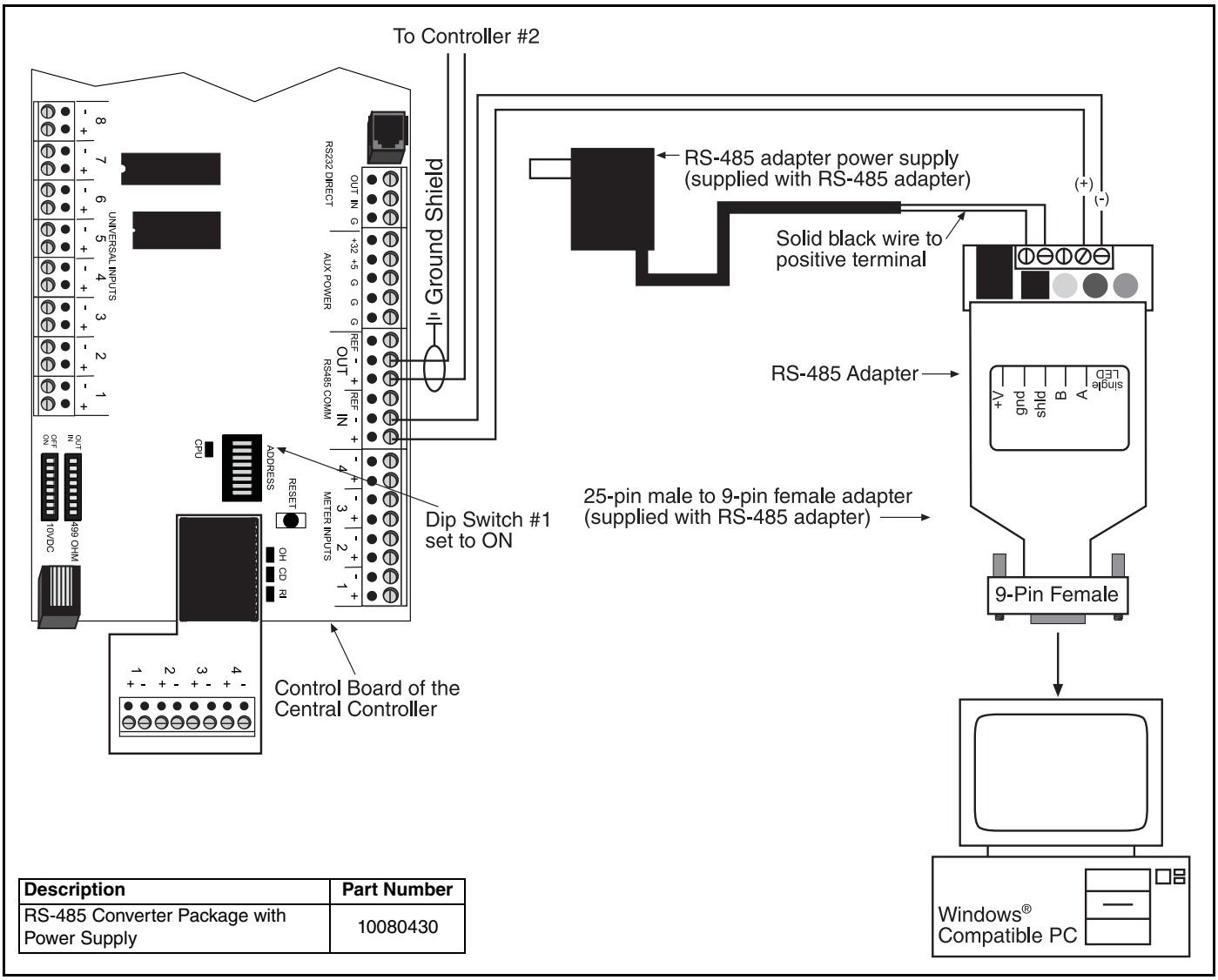

Description	Part Number
RS-485 Converter Package with Power Supply	10080430

SYSTEM CONTROL

Material Specifications

Enclosure Material: Metal

Weight: 6.8 lbs (3.08 kg)

Dimensions: 10.2" x 11.4" x 2.8" (25.4 x 29.0 x 7.1 cm)

Protection: Rating IP20

Electrical Specifications

Supply: 120 V, 60 Hz, 1 Ø, 20 A

Zone Relay: Single pole 20 A, 120 Vac (resistive)

Pump Relay: Single pole 20 A, 120 Vac (resistive) 1 HP motor rated.

Thermostats: Low voltage 24 Vac

Mounting Hole Layout

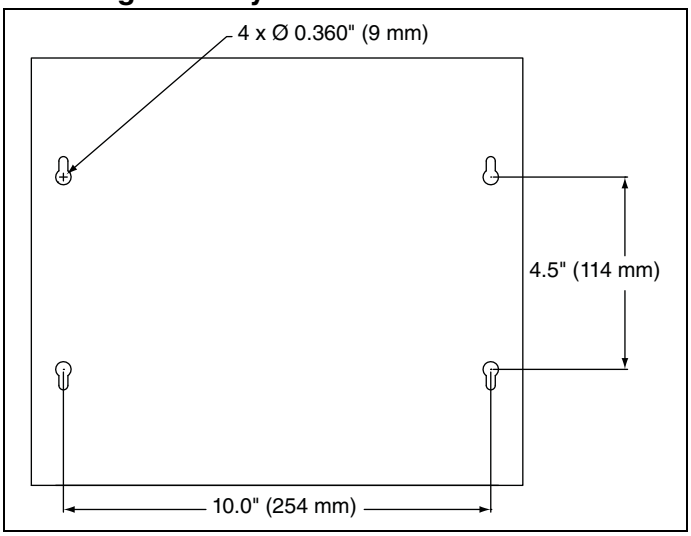

Cable Requirements

Low voltage wiring (pressure switch, thermostats) must be rated to 300 V. Line voltage wiring must be rated to 600 V.

The low voltage circuit conforms with Class 2 separation of circuit requirements. National Electrical Codes® for wiring class 2 low voltage circuits must be followed.

As per individual building specification for class of cable to be used. Use copper conductors only.

ROBERTS GORDON® System Controller

Listed below are the recommended cable requirements for the various connections for the System Controller.

- Line Power Supply
  The power connection should be made with cable, size 14 AWG wire.
- Relay Output
  The control connection for load of each individual relay should be made with 16 AWG wire.
- Pressure Switch Input
  The wiring connection for pressure switch should be unshielded 18 AWG wire.
- Thermostats
  The wiring connection for Thermostats should be unshielded cable.

External Wiring Connection Details

Low voltage wiring (pressure switch, thermostats) must be rated to 300 V. Line voltage wiring must be rated to 600 V.

The low voltage circuit conforms with Class 2 separation of circuit requirements. National Electrical Codes® for wiring class 2 low voltage circuits must be followed.

As per individual building specifications for class of cable to be used. Use copper conductors only.

External Wiring Diagram ROBERTS GORDON® EP-100 and EP-201 120 V 1 Ø Pump

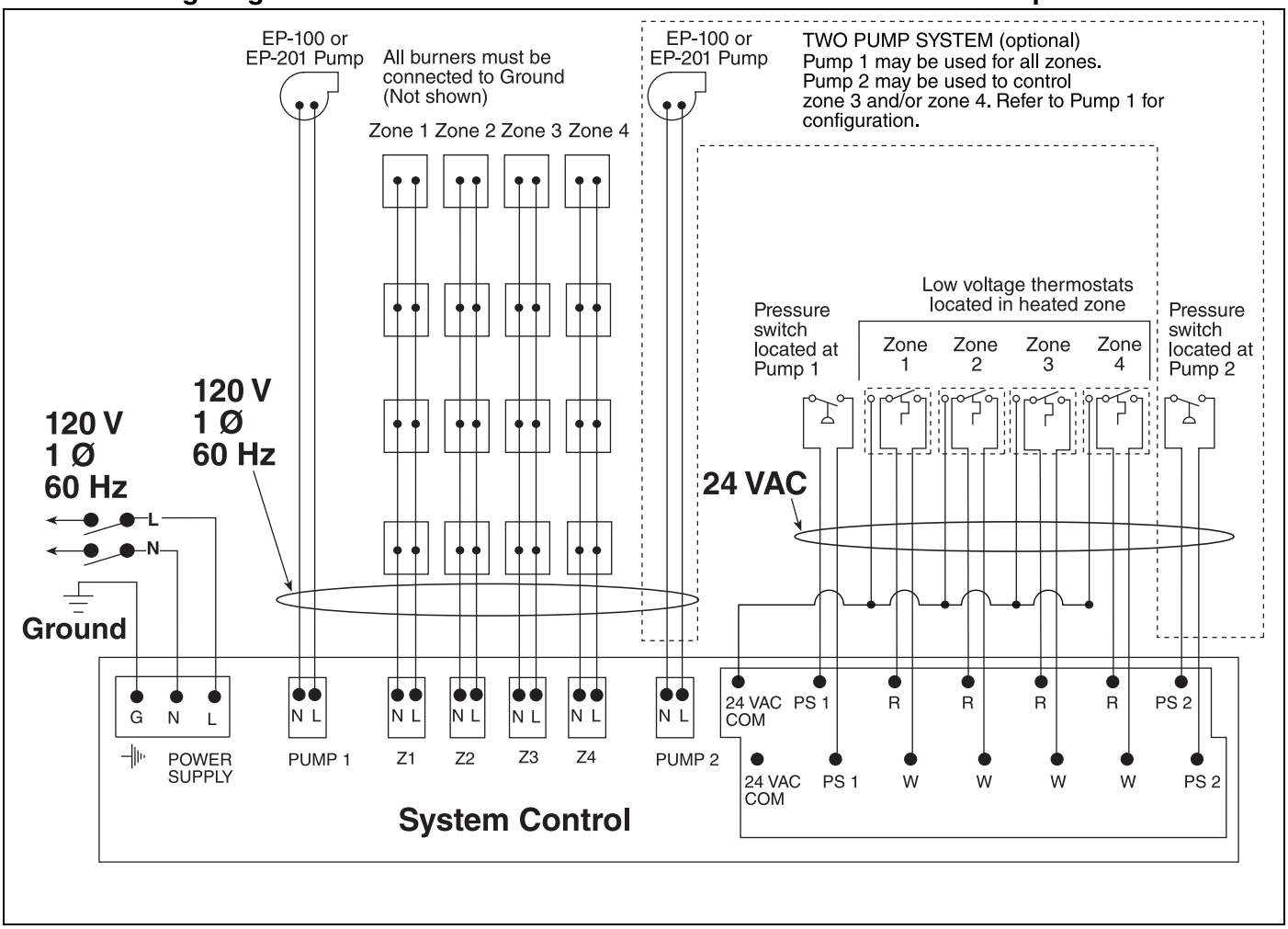

External Wiring Diagram ROBERTS GORDON® EP-100, EP-201 or EP-301, 230 V 1 Ø Pump

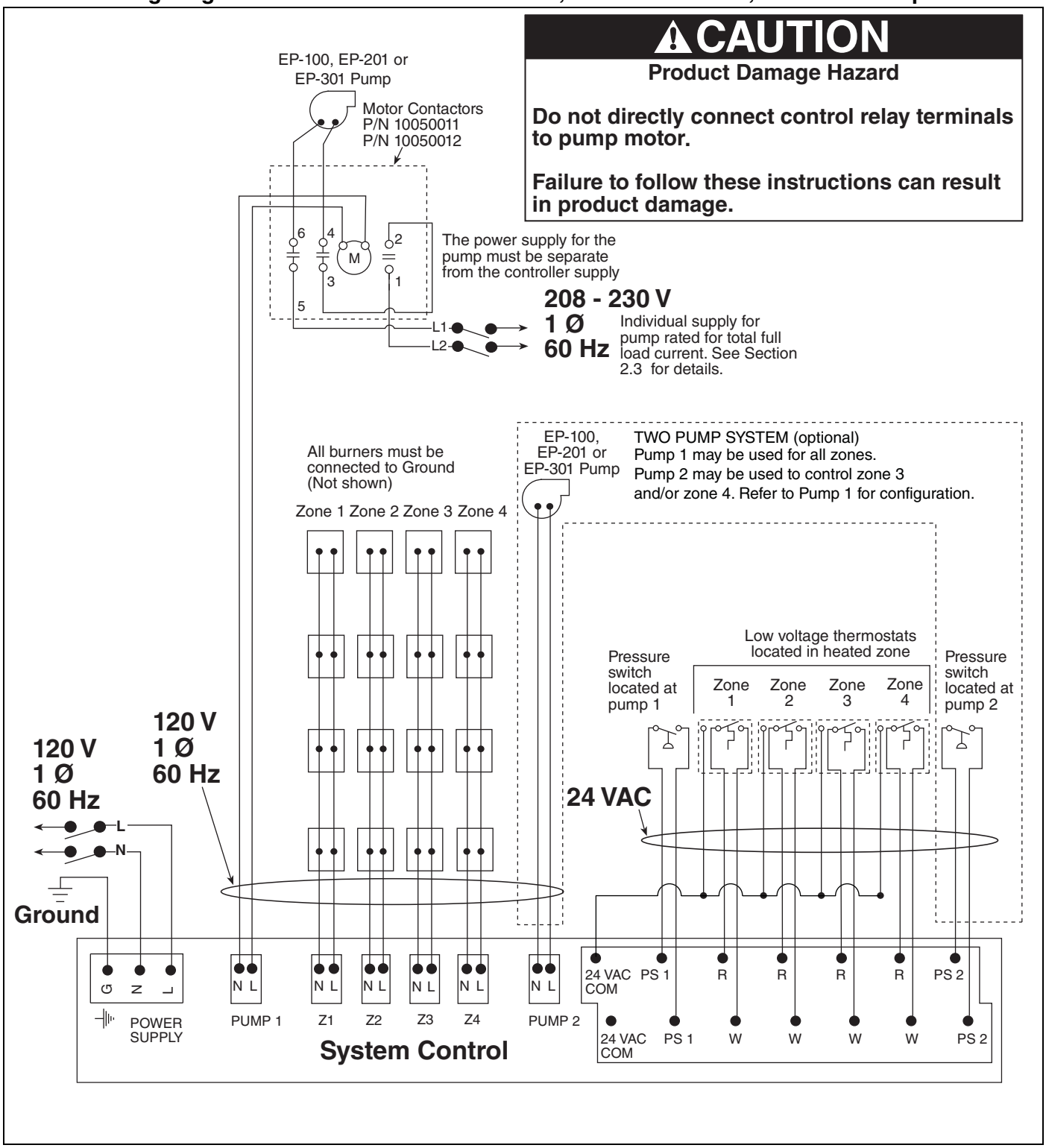

External Wiring Diagram ROBERTS GORDON® EP-203 or EP-303, 208 - 230 V (or 460 V) 3 Ø Pump

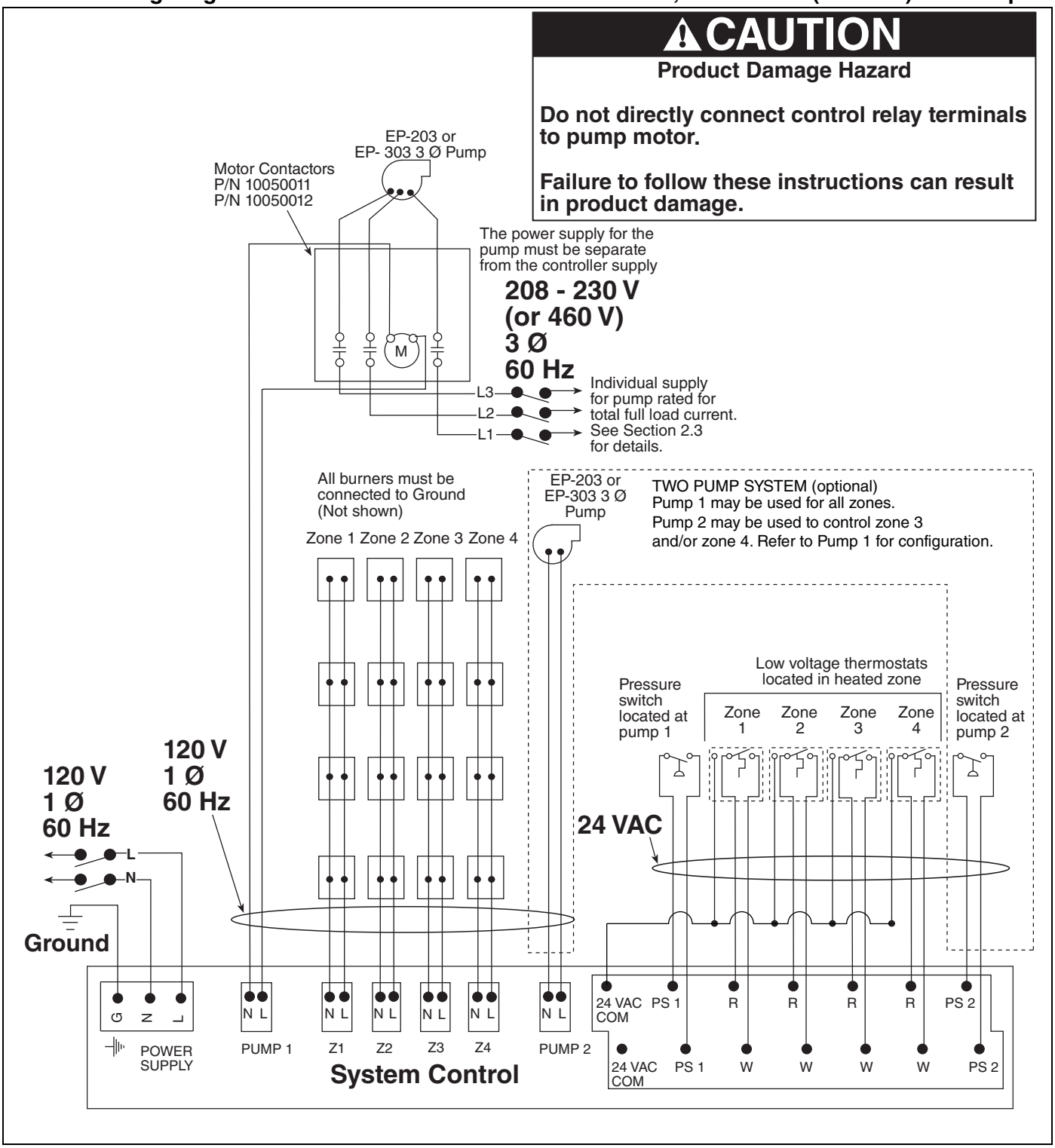

External Wiring Diagram ROBERTS GORDON® EP-100 or EP-201 120 V 1 Ø Pump with Outside Air Blower

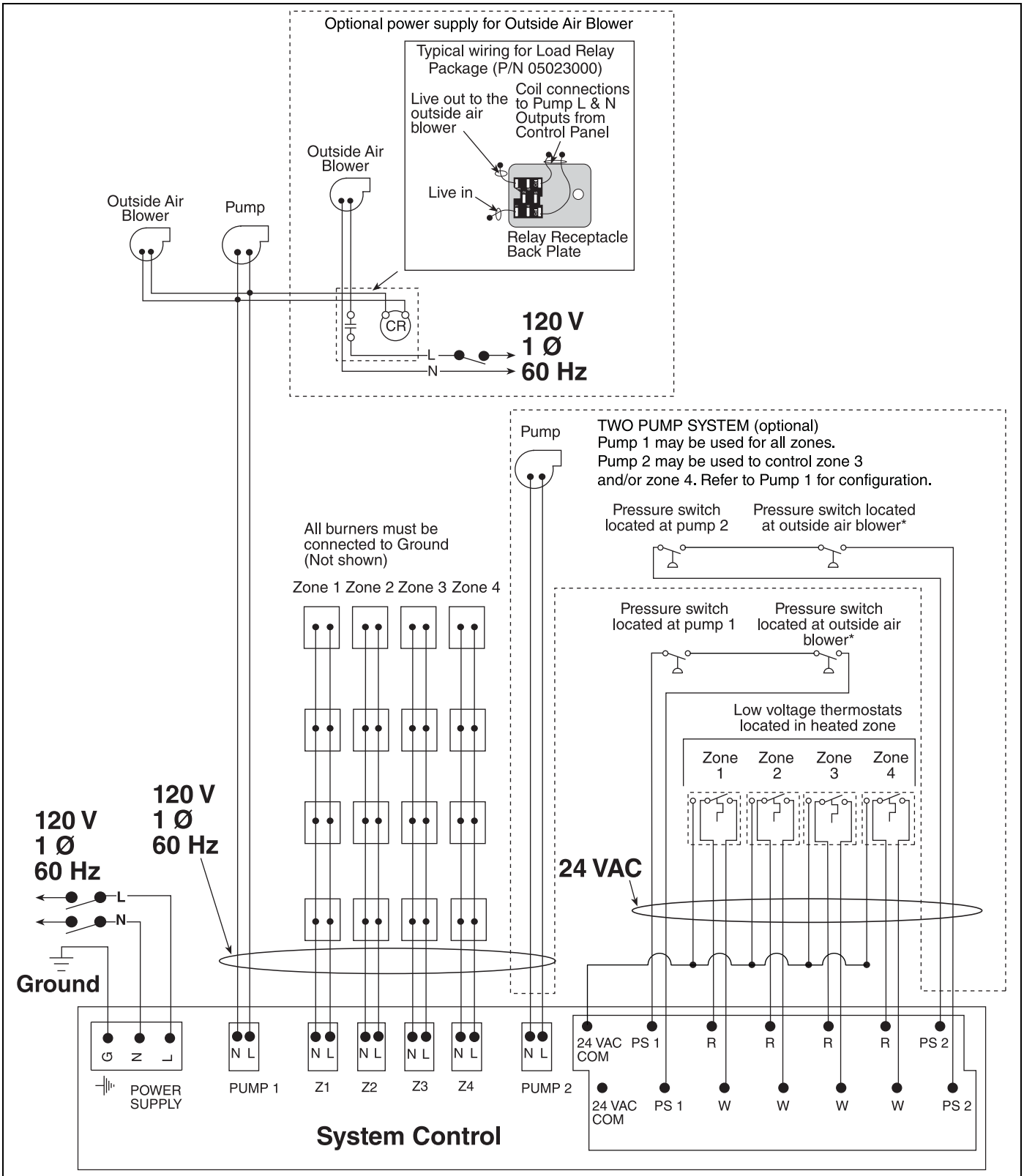

*Without blower contacts need to be n/c.

Thermostat Wire Lengths

To ensure proper thermostat operation the recommendations for wire guages as indicated below must be used.

Distance (ft)	Guage
Up to 500	20
Up to 400	20
Up to 300	22
Up to 200	24
Up to 100	26

Thermostat Wiring

Some applications may call for zones to operate off a single thermostat. Zones 1 and 3 may share a thermostat and zones 2 and 4 may share a thermostat. At no time should either zone 1 or 3 be connected to zone 2 or 4. Doing so will result in damage to the control board.

THE ROBERTS GORDON® CORAYVAC® LIMITED WARRANTY

ROBERTS-GORDON LLC WILL PAY FOR:

Within 36 months from date of purchase by buyer or 42 months from date of shipment by Roberts-Gordon LLC (whichever occurs first), replacement parts will be provided free of charge for any part of the product which fails due to a manufacturing or material defect.

Roberts-Gordon LLC will require the part in question to be returned to the factory. Roberts-Gordon LLC will, at its sole discretion, repair or replace after determining the nature of the defect and disposition of part in question.

ROBERTS GORDON® warrants the cast iron combustion chamber of the ROBERTS GORDON® CORAYVAC® Classic System will be free from defects in material and workmanship. This warranty is limited to twenty-five (25) years from the date of shipment by Roberts-Gordon LLC. All other components of the ROBERTS GORDON® CORAYVAC® Classic System adhere to the standard warranty listed in the paragraph above.

ROBERTS GORDON® Replacement Parts are warranted for a period of 12 months from date of shipment from Roberts-Gordon LLC or the remaining ROBERTS GORDON® CORAYVAC® warranty.

ROBERTS-GORDON LLC WILL NOT PAY FOR:

Service trips, service calls and labor charges.

Shipment of replacement parts.

Claims where the total price of the goods have not been paid.

Damage due to:

- Improper installation, operation or maintenance.
- Misuse, abuse, neglect, or modification of the ROBERTS GORDON® CORAYVAC® in any way.
- Use of the ROBERTS GORDON® CORAYVAC® for other than its intended purpose.
- Incorrect gas or electrical supply, accident, fire, floods, acts of God, war, terrorism, or other casualty.
- Improper service, use of replacement parts or accessories not specified by Roberts-Gordon.
- Failure to install or maintain the ROBERTS GORDON® CORAYVAC® as directed in the Installation, Operation and Service Manual.
- Relocation of the ROBERTS GORDON® CORAYVAC® after initial installation
- The use of the ROBERTS GORDON® CORAYVAC® in a corrosive atmosphere containing contaminants.
- The use of the ROBERTS GORDON® CORAYVAC® in the vicinity of a combustible or explosive material.
- Any defect in the ROBERTS GORDON® CORAYVAC® arising from a drawing, design, or specification supplied by or on behalf of the consumer.
- Damage incurred during shipment. Claim must be filed with carrier.

WARRANTY IS VOID IF:

The ROBERTS GORDON® CORAYVAC® is not installed by a contractor qualified in the installation and service of gas fired heating equipment.

You cannot prove original purchase date and required annual maintenance history.

The data plate and/or serial number are removed, defaced, modified or altered in any way.

The ownership of the ROBERTS GORDON® CORAYVAC® is moved or transferred. This warranty is nontransferable.

Roberts-Gordon LLC is not permitted to inspect the damaged equipment and/or component parts.

READ YOUR INSTALLATION, OPERATION AND SERVICE MANUAL

If you have questions about your equipment, contact your installing professional. Should you need Replacement Parts or have additional questions, call or write:

Roberts-Gordon LLC
1250 William Street
P.O. Box 44
Buffalo, New York 14240-0044
Telephone: +1.716.852.4400
Fax: +1.716.852.0854 Toll Free: 800.828.7450
www.rg-inc.com www.corayvac.com
www.robertsgordon.com www.radiantheaters.com

Roberts-Gordon LLC's liability, and your exclusive remedy, under this warranty or any implied warranty (including the implied warranties of merchantability and fitness for a particular purpose) is limited to providing replacement parts during the term of this warranty. Some jurisdictions do not allow limitations on how long an implied warranty lasts, so this limitation may not apply to you. There are no rights, warranties or conditions, expressed or implied, statutory or otherwise, other than those contained in this warranty.

Roberts-Gordon LLC shall in no event be responsible for incidental or consequential damages or incur liability for damages in excess of the amount paid by you for the ROBERTS GORDON® CORAYVAC®. Some jurisdictions do not allow the exclusion or limitation of incidental or consequential damages, so this limitation or exclusion may not apply to you. This warranty gives you specific legal rights, and you may also have other rights which vary from jurisdiction to jurisdiction.

Roberts-Gordon LLC shall not be responsible for failure to perform under the terms of this warranty if caused by circumstances out of its control, including but not limited to war, fire, flood, strike, government or court orders, acts of God, terrorism, unavailability of supplies, parts or power. No person is authorized to assume for Roberts-Gordon LLC any other warranty, obligation or liability.

LIMITATIONS ON AUTHORITY OF REPRESENTATIVES:

No representative of Roberts-Gordon LLC, other than an Executive Officer, has authority to change or extend these provisions. Changes or extensions shall be binding only if confirmed in writing by Roberts-Gordon LLC's duly authorized Executive Officer.